49763000

CONTROL DATA CORPORATION

# STREAMING TAPE UNIT 92185 - VERTICAL MOUNT

THEORY OF OPERATION
DIAGRAMS
MAINTENANCE
PARTS IDENTIFICATION

## HARDWARE MAINTENANCE MANUAL

**WARNING**

Always observe the following when installing, operating, and maintaining this unit:

- This drive must be connected to a power distribution system that has a direct connection to earth ground (TT network).
- When the drive is mounted in an equipment rack or cabinet, be certain that the internal temperature of the rack or cabinet does not exceed the limits defined in this manual. Where units are stacked vertically, pay special attention to the top where temperatures are usually highest.
- To ensure the integrity of safety features built into the drive, installation and maintenance must be performed only by qualified service personnel using designated CDC/CPI parts.
- In case of fire or other emergency, isolate the drives from the main power by disconnecting the drive power plugs from their site power receptacles. In situations where pulling the plugs is not possible or practical, use the system main power disconnect to isolate the drives from the main power.

**ACHTUNG**

Folgendes ist bei Installation, Bedienung, und Wartung des Geraetes unbedingt zu beachten:

- Dieses Laufwerk muss an ein Spannungsversorgungssystem angeschlossen werden, welches direkt nach Erde verbunden ist (TT Spannungsversorgungssystem).
- Wenn das Laufwerk in einem Geraeteeinschub oder Gehaeuse montiert ist, versichern Sie sich, dass die Temperatur im Einschub oder Gehaeuse die in diesem Handbuch festgelegten Werte nicht ueberschreitet. Sind Geraete uebereinander angeordnet, achten Sie besonders auf das obere Geraet, da dort die Temperatur gewoehnlich am hoechsten ist.
- Um die Zuverlaessigkeit der im Laufwerk eingebauten Sicherheitseinrichtungen zu gewaehrleisten, darf die Installation und Wartung des Geraetes nur von qualifiziertem Wartungspersonal unter Verwendung von Original-CDC/CPI-Ersatzteilen durchgefuehrt werden.
- Bei Ausbrechen von Feuer oder in anderen Notfaellen ist die Verbindung zum Hauptstromnetz durch das Ziehen des Netzsteckers aus der Steckdose zu unterbrechen. Sollte dies nicht moeglich oder unpraktisch sein, so ist der Hauptstromunterbrecher des Systems zu bedienen, um die Laufwerke vom Hauptstromnetz zu trennen.

**WARNING**

This equipment generates, uses, and can radiate radio frequency energy and, if not installed and used in accordance with the instructions manual, may cause interference to radio communications. It has been tested and found to comply with the limits for a Class A peripheral computing device pursuant to Subpart J of Part 15 of the FCC Rules which are designed to provide reasonable protection against such interference when operated in a commercial environment. Operation of this equipment in a residential area is likely to cause interference, in which case, the user, at his own expense, will be required to take whatever measures may be required to correct the interference.

49763000

CONTROL DATA CORPORATION

# STREAMING TAPE UNIT 92185 - VERTICAL MOUNT

THEORY OF OPERATION
DIAGRAMS
MAINTENANCE
PARTS IDENTIFICATION

HARDWARE MAINTENANCE MANUAL

# REVISION RECORD

| REVISION | DESCRIPTION |
|---|---|
| 01 | Preliminary Release. |
| A<br>(08-01-84) | Released. |
| B<br>(11-30-84)<br>Series Code<br>08 | This revision incorporates ECO's 51387, 51316, 51379, 51380, 51411, 51489, 51516, 51476, 51540, and 51520 affecting pages: 5-1/5-2, 5-3 thru 5-11, 5-28, 5-29, 5-32, 5-34 thru 5-36, 5-38 thru 5-44, 5-46 thru 5-64, 5-66 thru 5-84, 5-87 thru 5-93, 5-95 thru 5-118. This revision also incorporates technical changes to pages: vi, 4-2, 4-44, 6-7, 6-25, 6-27, 6-28, 6-30 thru 6-35, 6-37, 6-39, 6-42, 6-43, 6-45, 6-49, 6-51, 6-53 thru 6-61, 6-63 thru 6-65, 6-67, 6-69, 6-70, 6-72, 6-74, 6-76, 6-79, 6-81 thru 6-85, 6-87 thru 6-95, 6-97 thru 6-102, 6-115/6-116, 6-120, 6-168, 6-213, 6-214, and 6-237. |
| C<br>(01-18-85)<br>(02-22-85)<br>Series Code<br>09, 10 | This revision incorporates ECO's 51419C, 51520 and 51578 affecting page 7-19. This revision includes technical changes affecting pages: 5-75, 6-41, 6-42, 6-106, 6-140, 6-175, 6-203 and 6-237. ECO 51533A is N/A. |
| D<br>(03-30-85)<br>Series Code<br>11 | This revision incorporates technical and editorial changes affecting pages: ii, iii/iv, v, vi, vii, viii, ix, x, xi, xii, 4-5, 4-8 thru 4-11, 4-15, 4-18, 4-19, 4-20, 5-1/5-2, 6-69, 6-70, and 6-226. ECO 51615 has no effect on this manual. |
| E<br>(05-20-85)<br>Series Code<br>12 | This revision incorporates ECO 51664 and other technical and editorial changes affecting pages: 6-4 thru 6-14, 6-25 thru 6-117, 6-123 thru 6-127, 6-129 thru 6-148, 6-150, 6-152 thru 6-170, 6-172 thru 6-178, 6-180, 6-181, 6-183 thru 6-183B, 6-185 thru 6-188. |
| PUB. NO.<br>49763000 | Revision letters I, O, Q, S, X, and Z are not used. |

c 1984, 85, 86, 87
By Control Data Corporation
Printed in the United States
of America

Address comments concerning this manual to:

Laser Magnetic Storage
International Company
Technical Publications Dept.
2621 Van Buren Avenue
Norristown, Pa. 19403

or use the comment sheet in the back of this manual.

# REVISION RECORD

| REVISION | DESCRIPTION |
|---|---|
| E.1 (06-24-85) Series Code 12 | This revision incorporates ECO 51700 and other technical and editorial changes affecting pages: vii, viii, 6-25, 6-27, 6-28, 6-30 thru 6-37, 6-39, 6-41 thru 6-49, 6-51, 6-53 thru 6-61, 6-63 thru 6-65, 6-67, 6-69, 6-70, 6-72, 6-74, 6-76, 6-79, 6-81 thru 6-85, 6-87, 6-89, 6-91 thru 6-95, 6-97 thru 6-102, 6-115/116, 6-120, 6-121, 6-152, 6-167, 6-182, 6-183, 6-183C thru 6-183H, 6-203, 6-236, 6-237, 6-237A, 6-239. |
| F (08-19-85) Series Code 13 | This revision incorporates ECO 51629 and other technical and editorial changes affecting pages: 6-6A, 6-9, 6-10B, 6-47, 6-48, 6-52, 6-57, 6-58, 6-60 thru 6-63, 6-69 thru 6-71, 6-74, 6-76, 6-81, 6-92, 6-95, 6-96, 6-100, 6-152, 6-167, 6-168, 6-183, 6-183B thru 6-188B, 6-222, 6-226, 6-230. |
| F.1 (09-06-85) Series Code 13 | This revision incorporates technical and editorial changes affecting pages: 7-3 thru 7-23. |
| F.2 (09-27-85) Series Code 13 | This revision incorporates technical changes affecting pages: xi, 4-19, 4-31, 6-39, 6-42, 6-43, 6-45, 6-53, 6-63, 6-67, 6-70, 6-76, 6-79, 6-81, 6-82, 6-84, 6-85, 6-89B, 6-92, 6-95, 6-183C thru 6-183J, 6-185, 6-185B, 7-5, 7-11, 7-12, 7-13, 7-22, 7-23, 7-24. |
| G (10-15-85) Series Code 14 | This revision incorporates technical changes affecting pages: 6-152, 6-177, 6-203, 6-215. ECO's 51629, 51751, 51776 have no effect on this manual. |
| G.1 (11-19-85) Series Code 14 | This revision incorporates ECO 51800 affecting page: 7-13. |
| PUB. NO. 49763000 | Revision letters I, O, Q, S, X, and Z are not used. |

## REVISION RECORD

| REVISION | DESCRIPTION |
|---|---|
| G.2 (12-05-85) Series Code 14 | This revision incorporates ECO 51850 affecting pages: 7-13, 7-22. |
| H (12-16-85) Series Code 15 | This revision incorporates technical changes affecting pages: 6-182, 6-211, 6-212, 6-212A/B, 6-219, 6-222, 6-232, 6-233, 6-234, 6-236, 6-237, 7-237A, 6-239, 6-240, 6-242, 6-243, 6-245, 7-4, 7-5, 7-9, 7-11, and editorial changes affecting pages: iii, iv, v, vi, vii, ix, x, xi, xii, xiii, xiv, xv, xvi, 5-1, 5-92 thru 5-208, and 7-23. |
| J (1-22-86) Series Code 16 | This revision incorporates ECO's 51790 and 51570 affecting pages: iiv, vi, 7-13 and 7-22. |
| K (2-20-86) Series Code 17 | This revision incorporates ECO 51786, 51765, 51810, 51835 affecting pages: iib, iii, iv, vi, ix, xiii, xiv, 4-4 thru 4-11, 5-3, 5-7 thru 5-27, 5-30, 5-31, 5-32, 5-34, 5-36, 5-39, 5-40, 5-41, 5-68, 5-69, 5-71, 5-72, 5-73, 5-75, 5-78 thru 5-83, 5-85, 5-86, 5-87, 5-90, 6-168, 6-183C, 6-183I, 6-183J, 6-185, 6-185E, 6-185F, 6-225, 6-226, 6-226A, 6-226B, 6-227, 7-13, and 7-22. |
| L (3-21-86) Series Code 18 | This revision records ECO PB 51862 N/A to this manual. |
| M (4-25-86) Series Code 18,19 | This revision incorporates technical and editorial changes affecting pages: iii, v, vi, 4-5, 4-25, 4-27, 4-46, 4-52, 6-123, 6-151, 6-183H, 6-183J, 6-212, 6-216, 6-217, 6-223, 6-226, 6-226A, 6-229, 6-245, 7-6, 7-10 thru 7-13, 7-17, 7-18, 7-20, 7-21. ECO's PB 51919 and 51924A N/A to this manual. |

PUB. NO. 49763000

Revision letters I, O, Q, S, X, and Z are not used.

REVISION RECORD

| REVISION | DESCRIPTION |
|---|---|
| N<br>(6-20-86)<br>Series Code<br>20 | This revision incorporates ECO PB 51951 and technical and editorial changes affecting pages: xv, xvi, 4-53, 5-100, 6-7, 6-25, 6-110, 6-152, 6-175, 6-183, 6-185D, 6-185F, 7-13, 7-22, and 7-23. ECO PB 51955 N/A to this manual. Added page 6-100A/B. |
| P<br>(09-19-86)<br>Series Code<br>21 | This revision includes editorial changes affecting pages: iic/iid thru vi, x, xiii, xvi, 4-55 thru 4-65/4-66, and technical changes affecting pages: 4-3, 4-23, 5-5, 5-6, 5-7, 5-15, 5-16, 5-17, 5-28, 5-29, 5-35, 5-36, 5-37, 5-42, 5-43, 5-44, 5-46, 5-47, 5-49, 5-51, 5-53, 5-55, 5-57, 5-59, 5-61, 5-63, 5-66, 5-67, 5-68, 5-71, 5-77, 5-79, 5-84, 5-88, 5-92, 5-93, 6-100A/B, 6-215, 6-216, 6-217. ECO PB 51995 has no effect on this manual. |
| R<br>(10-24-86)<br>Series Code<br>22 | This revision incorporates ECO 51935 and 51979 and technical changes affecting pages: 7-7, 7-13, and 7-22. |
| T<br>(11-21-86)<br>Series Code<br>23 | ECO PB 51938 has no effect on this manual. |
| U<br>(12-12-86)<br>Series Code<br>23 | This revision incorporates technical and editorial changes affecting pages: xiv, xvi, 6-12, 6-57, 6-88A, 6-92, 6-103, 6-183I, 6-184, 6-189, 6-196, and 6-197. |
| V<br>(01-23-87)<br>Series Code<br>24 and above | This revision incorporates ECO PB 52075 affecting page: 7-13. |
| W<br>(03-20-87)<br>Series Code<br>25 and above | This revision incorporates ECO PB 52100 and technical changes affecting pages: ii, iia, iib, 6-211, 6-212, 6-220, 6-227, 7-13, 7-22. |
| PUB. NO.<br>49763000 | Revision letters I, O, Q, S, X, and Z are not used. |

REVISION RECORD

| REVISION | DESCRIPTION |
|---|---|
| Y<br>(05-29-87)<br>Series Code<br>26 and above | This revision incorporates ECO's PB 52113, 52135, 52127, 52081, 52152, 52153, 52155, 52116B, and technical changes affecting pages: iic, iid, 6-2, 6-6, 6-6A, 6-6B, 6-7, 6-7A, 6-9, 6-9A, 6-60, 6-61, 6-76, 6-79, 6-86, 6-151, 6-152, 6-182, 6-211, 6-212, 6-222, 6-230, 6-233, 6-237A, 7-7, 7-13, 7-15, and 7-22. |
| AA<br>(07-24-87)<br>Series Code<br>27 and above | This revision incorporates ECO's PB 52097 and 52197 and technical changes affecting pages: 6-247, 7-4, 7-7, 7-13, 7-18 thru 7-22. Editorial changes delete pages: iii thru vi. Pages vii thru xvi are re-paginated to iii thru xii. |
| | |
| PUB. NO.<br>49763000 | Revision letters I, O, Q, and X are not used. |

# PREFACE

The purpose of this manual is to furnish to the customer engineer information needed to maintain the 92185 STU. It is assumed that the customer engineer has had training and/or experience on the 92185 or similar tape units. Under no circumstances should maintenance be attempted by any one without the prerequisite skills and experience.

Hardware reference/maintenance information is separated into two publications on a task-oriented basis. This manual, publication number 49763000, presents technical maintenance information in the following sections:

4 - THEORY OF OPERATION
5 - DIAGRAMS
6 - MAINTENANCE
7 - PARTS IDENTIFICATION

The other manual, publication number 49762900, presents routine operation, maintenance, and installation instructions in the following sections:

1 - GENERAL INFORMATION
2 - OPERATION
3 - INSTALLATION AND CHECKOUT

The manuals identified above are available through the nearest Control Data Sales Office.

The revision level of each page is indicated by an alpha character located adjacent to the publication number at the bottom of each page. The revision level of a page will change when the content of the page has been affected by deletions or additions to the page. A bar in the margin indicates where the change has occurred. A dot near the page number indicates the entire page is affected, and a bar adjacent to the page number indicates pagination rather than content has changed.

## WARNING

This equipment generates, uses, and can radiate radio frequency energy, and if not installed and used in accordance with the instructions manual, may cause interference to radio communications. It has been tested and found to comply with the limits for a Class A peripheral computing device pursuant to Subpart J of Part 15 of the FCC Rules, which are designed to provide reasonable protection against such interference when operated in a commercial environment. Operation of this equipment in a residential area is likely to cause interference, in which case, the user, at his own expense, will be required to take whatever measures may be required to correct the interference.

TABLE OF CONTENTS


| | PAGE |
|---|---|
| Section 4 - THEORY OF OPERATION | |
| GENERAL INFORMATION | 4-1 |
| PHYSICAL DESCRIPTION | 4-1 |
| POWER SUPPLY | 4-3 |
| TENSION/SPEED CONTROL | 4-3 |
| MAGNETIC HEAD | 4-4 |
| LOGIC AND CONTROL CIRCUITS | 4-4 |
| Formatter/Interface Logic Set | 4-5 |
| Read/Write/Servo Logic Set | 4-5 |
| POWER SUPPLY | 4-5 |
| GENERAL DESCRIPTION | 4-5 |
| PHYSICAL DESCRIPTION | 4-5 |
| Voltage Select PWA (7701896X Series Power Supplies) | 4-8 |
| Voltage Select Plug (7702934X Series Power Supplies) | 4-8 |
| Power Supply Control PWA | 4-8 |
| Main Power Supply PWA | 4-8 |
| POWER SUPPLY FUNCTIONAL DESCRIPTION | 4-8A |
| Input Power Selection | 4-8A |
| Standby Voltage Generation | 4-11 |
| Power-On Sequence | 4-13 |
| Switching Converter | 4-15 |
| DC Voltages | 4-17 |
| Low-Voltage/Over-Voltage Detection | 4-17 |
| PNEUMATIC SYSTEM | 4-18 |
| OPERATIONAL DESCRIPTION | 4-19 |
| SERVO-CONTROL PWA FUNCTIONAL DESCRIPTION | 4-21 |
| GENERAL INFORMATION | 4-21 |
| Formatter Commands/Response | 4-21 |
| Transport Control/Monitoring | 4-21 |
| Control Panel Command Execution | 4-21 |
| Tape Motion/Servo Control | 4-21 |
| SERVO-CONTROL MICROPROCESSOR | 4-22 |
| VELOCITY SERVO | 4-24 |
| TENSION SERVO | 4-25 |

TABLE OF CONTENTS


| | PAGE |
|---|---|
| Section 4 (Cont'd) | |
| POWER DRIVER PWA | 4-27 |
| WRITE DRIVER PWA | 4-32 |
| WRITE CONTROL | 4-32 |
| WRITE DRIVER LSI | 4-34 |
| DEGAUSSING | 4-35 |
| READ AMPLIFIER PWA | 4-36 |
| READ RECOVERY | 4-36 |
| Automatic Gain Control | 4-38 |
| LOOP DATA | 4-39 |
| FORMATTER PWA | 4-40 |
| I/O COMMAND TRANSLATION | 4-40 |
| DATA CONVERSION | 4-42 |
| PE Data Conversion | 4-42 |
| GCR Data Conversion | 4-42 |
| TAPE CONTROL AND IDENTIFIER MARK GENERATION AND DELETION | 4-42 |
| PE Data Block Format | 4-45 |
| GCR Data Block Format | 4-45 |
| ERROR DETECTION AND CORRECTION | 4-52 |
| INTERFACE PWA | |
| SYSTEM AND TIMING CONSIDERATING | 4-55 |
| MOTION CHARACTERISTICS | 4-55 |
| START/STOP MODE | 4-55 |
| Read Operations | 4-56 |
| Write Operations | 4-56 |
| Other Start/Stop Characteristics | 4-56 |
| STREAMING MODES | 4-56 |
| 25 IPS MODE CONTROL | 4-65/4-66 |
| ADAPTIVE VELOCITY CONTROL | 4-65/4-66 |

TABLE OF CONTENTS


| | PAGE |
|---|---|
| Section 5 - DIAGRAMS | |
| GENERAL | 5-1 |
| Section 6 - MAINTENANCE | |
| GENERAL DESCRIPTION | 6-1 |
| TROUBLE ANALYSIS | 6-1 |
| REMOVAL/REPLACEMENT PROCEDURES | 6-2 |
| - TROUBLE ANALYSIS | 6-3 |
| GENERAL INFORMATION | 6-3 |
| CUSTOMER ENGINEER PROCEDURES | 6-4 |
| PRE-SITE PROCEDURES | 6-4 |
| Corrective Action Matrices | 6-4 |
| ON-SITE PROCEDURES | 6-14 |
| Diagnostic Tests | 6-14 |
| Operator Diagnostics | 6-14 |
| Diagnostic Test Procedures | 6-16 |
| Customer Engineer Diagnostics | 6-18 |
| Customer Engineer Special Load/Unload Procedures | 6-20 |
| Sub-Fault Codes | 6-20 |
| STRUCTURED ANALYSIS METHOD (SAM) TABLES | 6-21 |
| SUB-FAULT CODE INTERPRETATION | 6-22 |
| TROUBLESHOOTING DIAGRAMS | 6-23 |
| - TEST DESCRIPTIONS | 6-117 |
| GENERAL INFORMATION | 6-117 |
| INITIATING A DIAGNOSTIC TEST AND SELECTING OPTIONS | 6-118 |
| LIST OF DIAGNOSTIC TESTS | 6-119 |

TABLE OF CONTENTS


PAGE

Section 6 (Cont'd)

- REMOVAL/REPLACEMENT (R/R) PROCEDURES 6-189

MAINTENANCE POSITION (ACCESS TO REAR COMPONENTS) 6-193

FRONT COVER INTERLOCK SWITCH 6-193
DRIVE COVER R/R 6-195
TAPE CLEANER R/R 6-196
DOOR INTERLOCK SWITCH R/R 6-198
FILE PROTECT SENSOR R/R 6-199
EOT/BOT SENSOR R/R 6-200
TAKE-UP REEL HUB R/R 6-202
TAKE-UP REEL MOTOR R/R 6-203
SUPPLY REEL HUB R/R 6-204
SUPPLY REEL MOTOR R/R 6-206
SUPPLY REEL MOTOR TACH AND SENSOR R/R 6-210
AIR BEARING SENSOR R/R 6-211
AIR BEARING SPRING GUIDE R/R 6-213
COMPRESSOR R/R 6-215
PRESSURE REGULATOR AND FILTER R/R 6-217
MAGNETIC HEAD R/R 6-219
OPERATOR PANEL R/R 6-223
COOLING FAN R/R 6-224
POWER SUPPLY R/R 6-225
CAPACITOR R/R 6-228
WRITE DRIVER R/R 6-230
READ AMPLIFIER R/R 6-232
SERVO-CONTROL R/R 6-236
FORMATTER READ R/R 6-239
FORMATTER WRITE R/R 6-242
INTERFACE R/R 6-245
POWER DRIVER R/R 6-247

Section 7 - PARTS IDENTIFICATION

PARTS DATA 7-1

LIST OF FIGURES


| NO. | TITLE | PAGE |
|---|---|---|
| 4-1 | STU Functional Block Diagram | 4-2 |
| 4-2 | Major Power Supply Components | 4-6 |
| 4-3 | Power Supply Block Diagram | 4-7 |
| 4-4A | Voltage Select PWA (7701896X Series Power Supplies) | 4-8C |
| 4-4B | Voltage Select Plug (7702934X Series Power Supplies) | 4-8D |
| 4-5A | Cooling Fan Wiring (7701896X Series Power Supplies) | 4-9 |
| 4-5B | Cooling Fan Wiring (7702934X Series Power Supplies) | 4-11 |
| 4-6 | Stand-By Voltage Generation | 4-12 |
| 4-7 | Power-On Sequence Flowchart | 4-14 |
| 4-8 | High Voltage Generation | 4-15 |
| 4-9 | Switching Converter Circuit | 4-16 |
| 4-10 | Vacuum and Pressure Distribution | 4-19 |
| 4-11A | Compressor Wiring 120V ac | 4-20 |
| 4-11B | Compressor Wiring 220V ac | 4-20 |
| 4-12 | Servo-Control Block Diagram | 4-23 |
| 4-13 | Velocity Servo - Simplified | 4-24 |
| 4-14 | Tension Servo - Simplified | 4-26 |
| 4-15 | Power Driver Block Diagram | 4-28 |
| 4-16 | Power Driver Waveforms | 4-29 |
| 4-17 | H-Bridge Switching | 4-30 |
| 4-18 | Switched +5 Volts | 4-31 |
| 4-19 | Write Control Block Diagram | 4-33 |
| 4-20 | Write Driver Block Diagram | 4-34 |
| 4-21 | Degaussing Waveform | 4-35 |
| 4-22 | Read Amplifier Block Diagram | 4-37 |
| 4-23 | I/O Command Translation | 4-41 |
| 4-24 | Phase Encoding | 4-43 |
| 4-25 | GCR Conversion | 4-44 |
| 4-26 | GCR Translation Values | 4-44 |
| 4-27 | NRZI Encoding | 4-45 |
| 4-28 | PE Format | 4-46 |
| 4-29 | GCR Tape Format | 4-47 |
| 4-30A | Detail of GCR Tape Format | 4-49 |
| 4-30B | Detail of GCR Tape Format | 4-49 |
| 4-30C | Detail of GCR Tape Format | 4-50 |
| 4-30D | Detail of GCR Tape Format | 4-51 |
| 4-31 | Phase Error Window - PE Mode | 4-53 |
| 4-32 | Phase Error Window - GCR Mode | 4-54 |
| 4-33 | Streaming Mode Velocity Diagram | 4-58 |
| 4-34 | Case 1 - Tape Motion Control | 4-60 |
| 4-35 | Case 2 - Velocity Profile | 4-61 |
| 4-36 | Case 2 - Tape Motion Control | 4-62 |
| 4-37 | Case 3 - Velocity Profile | 4-63 |
| 4-38 | Case 3 - Tape Motion Control | 4-64 |

LIST OF FIGURES (Cont'd)


| NO. | TITLE | PAGE |
|---|---|---|
| 6-1 | Flowchart of On-Site Trouble Analysis | 6-15 |
| 6-2 | Example of Structured Analysis Method (SAM) | 6-21 |
| 6-3 | Sub-Fault Code Interpretation (Example 1) | 6-22 |
| 6-4 | Sub-Fault Code Interpretation (Example 2) | 6-23 |
| 6-5 | Test 54 Hex Symbols | 6-172 |
| 6-5A | Setting Buffered (B) or Unbuffered (U/B) Mode, Buffered Pertec Enhanced I/F | 6-183E |
| 6-5B | Setting Buffered (B) or Unbuffered (U/B) Mode, Buffered STC Enhanced I/F | 6-185B |
| 6-5C | Setting Buffered (B) or Unbuffered (U/B) Mode, 256K Pertec I/F | 6-186B |
| 6-6A | STU Component Location | 6-190 |
| 6-6B | STU Component Location | 6-191 |
| 6-6C | STU Component Location | 6-192 |
| 6-7 | Access To Rear Tape Deck Components | 6-194 |
| 6-8 | Drive Cover Removal | 6-195 |
| 6-9 | Tape Cleaner | 6-196 |
| 6-10 | Door Interlock Switch (Rear View) | 6-198 |
| 6-11 | File Protect Sensor Alignment | 6-199 |
| 6-12 | EOT/BOT Sensor | 6-200 |
| 6-13 | Take-Up Reel | 6-202 |
| 6-14 | Supply Reel Hub Assembly | 6-204 |
| 6-15 | Supply Reel Assembly | 6-206 |
| 6-16 | Take-Up Reel Motor Disassembly | 6-207 |
| 6-17 | Tach/Sensor Assembly/Adjustment | 6-210 |
| 6-18 | Air Bearing Transducers | 6-211 |
| 6-19 | Air Bearing Spring Guide | 6-213 |
| 6-20 | Compressor | 6-215 |
| 6-21 | Regulator and Filter Removal | 6-218 |
| 6-22 | Magnetic Head Assembly | 6-219 |
| 6-23 | Magnetic Head Connectors | 6-221 |
| 6-24 | Servo-Control PWA | 6-221 |
| 6-25 | Operator Panel Assembly | 6-223 |
| 6-26 | Cooling Fan and Power Supply | 6-224 |
| 6-27A | Voltage Select PWA (7701896X Series Power Supplies) | 6-225 |
| 6-27B | Voltage Select PWA (7701896X Series Power Supplies) | 6-225 |
| 6-28 | Power Terminal Strip TB-1 | 6-227 |
| 6-29 | Capacitor | 6-228 |
| 6-30 | Write Driver PWA Connectors | 6-231 |
| 6-31 | Write Driver/Read Amp/Servo-Control PWAs | 6-234 |
| 6-32 | Read Amplifier PWA Connectors | 6-235 |
| 6-33 | Servo-Control PWA Connectors | 6-238 |
| 6-34 | Formatter Read/Write/Interface PWAs | 6-240 |
| 6-35 | Formatter Read PWA Connectors | 6-241 |
| 6-36 | Formatter Write PWA Connectors | 6-244 |
| 6-37 | Interface PWA Connectors | 6-246 |
| 6-38 | Power Driver Connectors | 6-248 |

## LIST OF FIGURES (Cont'd)


| NO. | TITLE | PAGE |
|---|---|---|
| 7-1 | Door Assembly - Vertical | 7-4 |
| 7-2 | Equipment Assembly - Front | 7-6 |
| 7-3 | Equipment Assembly - Rear | 7-8 |
| 7-4 | Equipment Assembly - Rear | 7-10 |
| 7-5 | Equipment Assembly - Rear | 7-12 |
| 7-6 | Motor Assembly, Take-Up Reel | 7-14 |
| 7-7 | Motor Assembly, Supply Reel | 7-16 |
| 7-8 | Air Bearing Assembly - Upper | 7-18 |
| 7-9 | Air Bearing Assembly - Lower | 7-20 |

# LIST OF TABLES


| NO. | TITLE | PAGE |
|---|---|---|
| 4-1 | Streaming Mode Motion Sequence Chart | 4-59 |
| 5-1 | Schematic Index | 5-1 |
| 6-1 | Referenced Maintenance Aids | 6-2 |
| 6-2 | Malfunction/Assembly Failure Matrix | 6-5 |
| 6-3 | Fault Code Matrix (Operator Test 01) | 6-6 |
| 6-4 | Test 02 Termination Codes Following Test 01 Fault Code 22 | 6-8 |
| 6-5 | Test 02 Termination Codes Following Test 01 Fault Code 24 | 6-8 |
| 6-6 | Test 02 Termination Codes Following Test 01 Fault Code 26, and Test 03 | 6-9 |
| 6-7 | Test 02 Termination Codes Following Test 01 Fault Codes 30, 31 | 6-9 |
| 6-8 | Test 03 Termination Codes Following Test 01 Fault Code 36 | 6-9A |
| 6-9 | Test 03 Termination Codes Following Test 01 Fault Code 03 | 6-10 |
| 6-10 | Test 03 Termination Codes Following Test 01 Fault Codes 04, 06 | 6-10 |
| 6-11 | Test 03 Termination Codes Following Test 01 Fault Code 22 | 6-10A |
| 6-12 | Test 03 Termination Codes Following Test 01 Fault Code 25 | 6-10A |
| 6-13 | Test 03 Termination Codes Following Test 01 Fault Code 26 | 6-10B |
| 6-14 | Test 03 Termination Codes Following Test 01 Fault Code 30 or 31 | 6-10B |
| 6-15 | Test 03 Termination Codes Following Test 01 Fault Code 32 | 6-11 |
| 6-16 | Test 03 Termination Codes Following Test 01 Fault Code 33 or 35 | 6-11 |
| 6-17 | Test 03 Termination Codes Following Test 01 Fault Code 36 | 6-12 |
| 6-18 | Test 03 Termination Codes Following Test 01 Fault Code 48 | 6-12 |
| 6-19 | Test 03 Termination Codes Following Test 01 Fault Code 52 | 6-12 |
| 6-20 | Option Bytes BPE Interface (Status When Bits Set To 1) | 6-183J |
| 6-21 | Option Bytes BSTCE Interface (Status When Bits Set To 1) | 6-185F |
| 6-22 | Option Bytes 256KP Interface (Status When Bits Set To 1) | 6-186F |
| 6-23 | Removal/Replacement Index | 6-189 |
| 7-1 | Printed Wiring Assemblies | 7-22 |
| 7-2 | Cable Assemblies | 7-23 |

# THEORY OF OPERATION 4

## GENERAL INFORMATION

In this section of the manual, the principles of operation of the streaming tape unit (STU) are discussed. Descriptions are provided for the functions of the transport on a major component basis. Major areas of discussion are as follows:

- o Power Supply
- o Pneumatic System
- o Servo/Control PWA
- o Power Driver PWA
- o Write Driver PWA
- o Read Amplifier PWA
- o Formatter PWAs
- o Interface PWA
- o System and Timing Considerations

Text is supported by diagrams, flowcharts and timing charts, where required, to facilitate understanding of the description. Diagrams contained in this section are condensed and simplified, and in no way should be used for transport troubleshooting. Logic diagrams and schematics contained in section 5 take precedence over any diagrams contained in the theory of operation. Refer to figure 4-1 for a block diagram of the STU.

A brief functional description of major functional areas of the STU is given in succeeding paragraphs. A more detailed circuit description then follows with accompanying block diagrams and flowcharts.

## PHYSICAL DESCRIPTION

The STU is a dual-speed reel-to-reel tape drive unit not requiring conventional capstan drive, tension arms, or vacuum columns. Tape is transported directly under electronic control, with no tape buffers required. Tension is sensed electronically by tension sensors built directly into the tape path. The major equipment components or subsystems are control, formatter, and interface PWAs, read/write head assembly and circuits, pneumatics/cooling systems, and the power supply and distribution circuitry. The following paragraphs give a brief description of the overall transport functions.

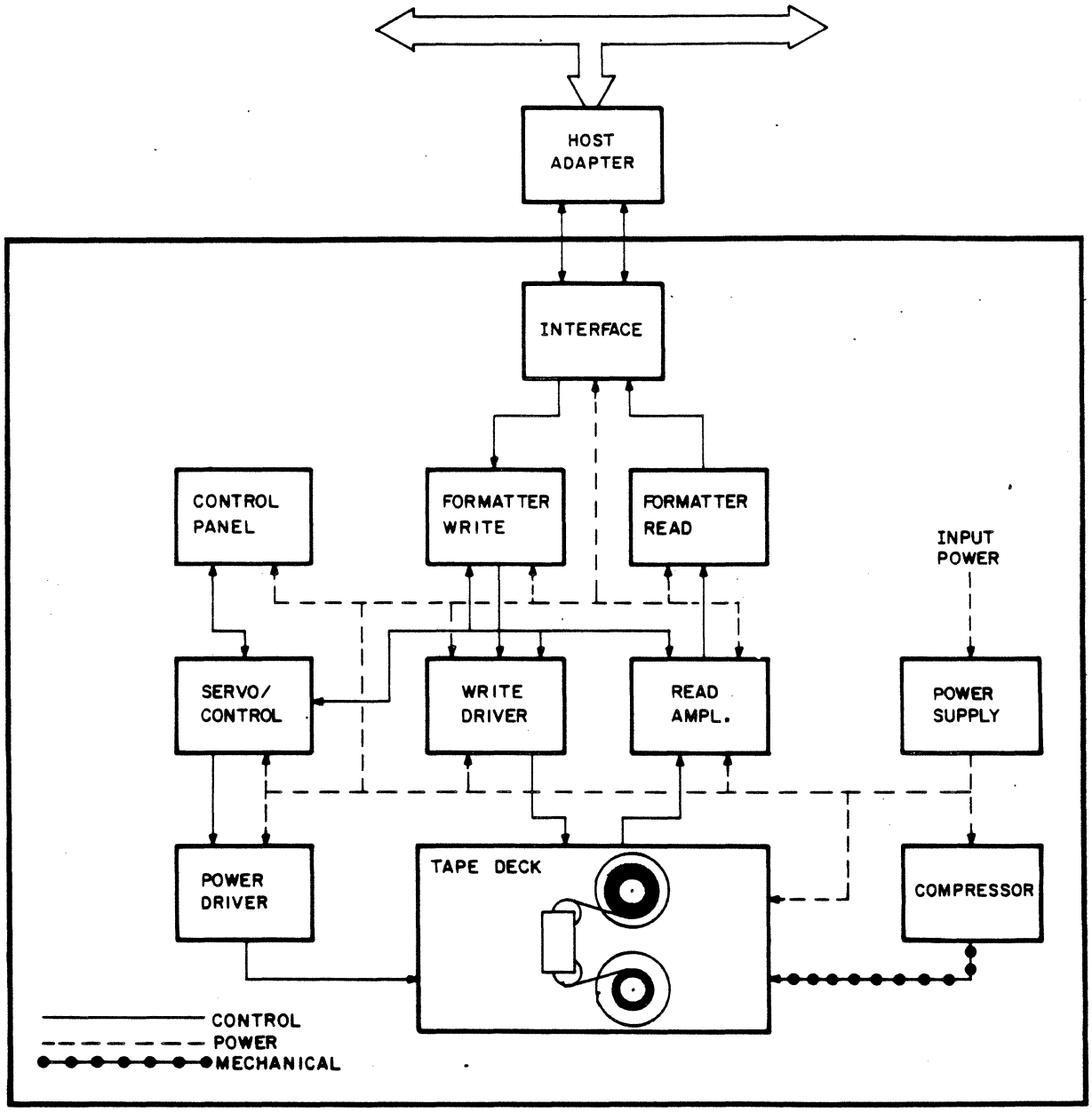


Figure 4-1. STU Functional Block Diagram

## POWER SUPPLY

The power supply is activated when the ON/OFF power switch (main circuit breaker) is in the ON position. This allows the LOGIC ON indicator on the control panel to illuminate, and also supplies the ac power to operate the cooling fan motor.

Pressing the ON/OFF power switch generates all the necessary dc voltages used throughout the STU logic circuits, as well as initiating a MASTER CLEAR pulse. This pulse is used to steer the control logic functions to a starting or known state prior to starting a Load operation.

An auto load feature built into the power supply allows the host system to perform a power-on, automatic load operation of the tape is threaded. At the conclusion of the autoload sequence, an ON-LINE status is indicated.

## TENSION/SPEED CONTROL

The load function is initiated by the LOAD switch on the control panel when off-line. The compressor is activated at this time, causing air pressure to be gated to the air bearings. Air flow gated through holes in the bearings senses the tension of the tape through sensors physically located on the air bearings. The sensor output signals are applied to a tension servo circuit, whereby the supply (file) reel is directed to drive so that approximately 8 ounces of tension is maintained consistently across the tape path.

Tape speed is maintained through the use of a 1000 line tach and a one-line tach located on the rear of the reel motors. Tach information is applied to an electronically controlled servo, where a calculation is made of the linear velocity (inches per second) and the radius of the take-up reel. The radius of tape on the reel is always a known factor, therefore, linear velocity can be compensated for without the use of a capstan drive circuit.

## MAGNETIC HEAD

The magnetic head fulfills the objective of the STU; ie., to read from or to write to magnetic tape. This assembly consists of a sectionalized read/write head and an erase head. Selection of the read or write modes of operation is made by the host through the control logic circuits. Data is transferred from or to the host via data lines that are gated to the individual read heads by the read/write circuits. Read recovery circuits convert the readback data to a digital format compatible with the control and formatter logic. Write driver circuits convert the logic- compatible write data to current levels required to drive the write head coils.

## LOGIC AND CONTROL CIRCUITS

The electronic components are divided physically into two sets; each set is housed in a separate cage. One cage contains the formatter/interface logic set consisting of the formatter write PWA, formatter read PWA, and interface PWA. The other cage contains the read/write/servo logic set consisting of the read amplifier PWA, write driver PWA, and servo/control PWA.

### Formatter/Interface Logic Set

The interface PWA serves as the transport link to the host. The interface PWA receives commands and data from the host, checks them for validity, and passes them onto the formatter PWAs. Also, the interface PWA manages the flow of data and status codes from the transport to the host during read operations.

The formatter write PWA receives commands and data from the interface PWA, translates the commands for the tape drive, and encodes the data into either PE or GCR format. The formatter write PWA also generates tape control and identification signals, and error checking and correction codes.

The formatter read PWA decodes the data from the PE or GCR format, and studs off the tape control an signal marks. The data is checked for errors and, if detected, the errors are corrected if possible, or the error condition is reported to the interface PWA.

## Read/Write/Servo Logic Set

The read amplifier PWA amplifies the data signals detected by the magnetic head, and converts these analog signals to digital logic levels usable by the formatter and interface logic.

The write driver PWA furnishes up to 140 mA of drive current to the write head with write compensation and ac bias up to 80 mA.

The servo/control PWA receives, validates, and executes commands from the formatter. The servo/control PWA also regulates the tape motion and responds to manually initiated commands from the control panel.

## POWER SUPPLY

### GENERAL DESCRIPTION

The power supply accepts regulated inputs of 120V or 220-240V power, with the only change in configuration being the positioning of the voltage select PWA on (P/N 7701896X) power supplies or positioning of the voltage select plug on (P/N 7702934X) power supplies. A functional description of this change is discussed in succeeding paragraphs. The major function of the power supply is to provide ac power to the cooling fan and pneumatic pump, to generate dc voltages used throughout the transport, and to provide shut-down capabilities in the event of abnormal voltage conditions.

### PHYSICAL DESCRIPTION

Power supply P/N 7701896X components consist of the ac input receptacle, line filter, circuit breaker (mounted on the top front of tape deck), voltage select PWA, main power supply PWA, and power supply control PWA. Power supply P/N 7702934X components are the same as power supply P/N 7701896X except a voltage select plug is used in place of a voltage select PWA. A simplified block diagram of major components is shown in figure 4-2. A brief functional descripton of the three power supply PWA's is as follows:

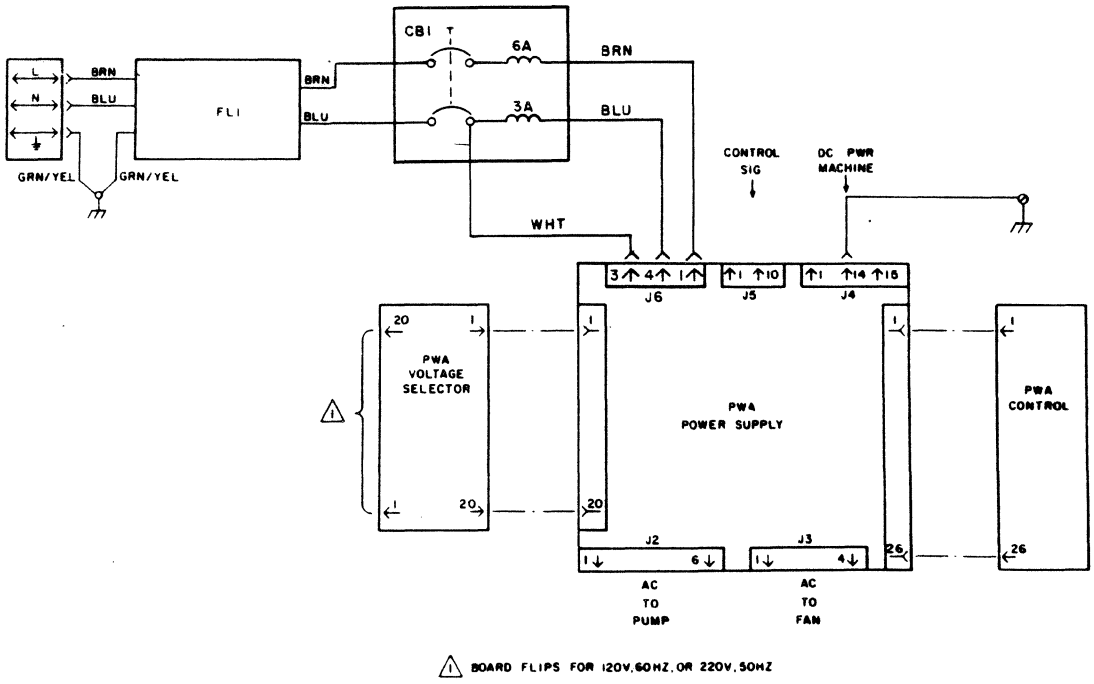


A. 7701896X Series Power Supply

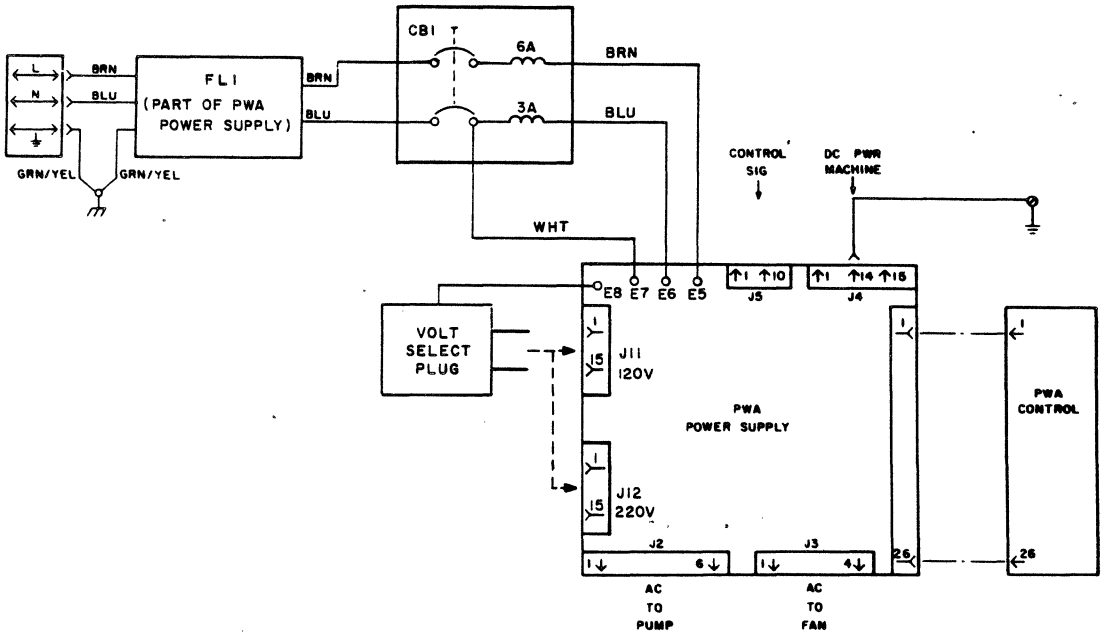


B. 7702934X Series Power Supply

Figure 4-2. Major Power Supply Components

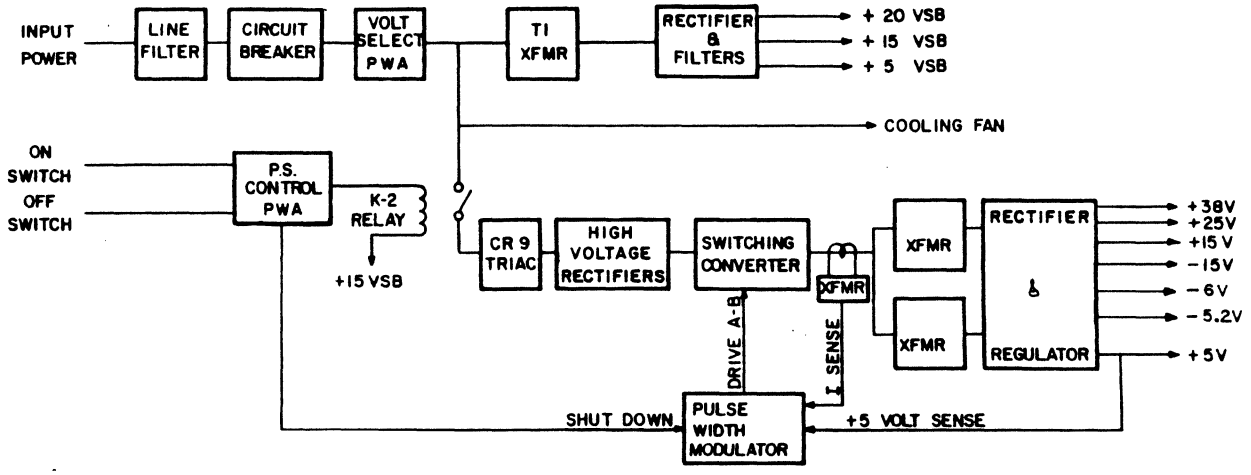


A. 7701896X Series Power Supply

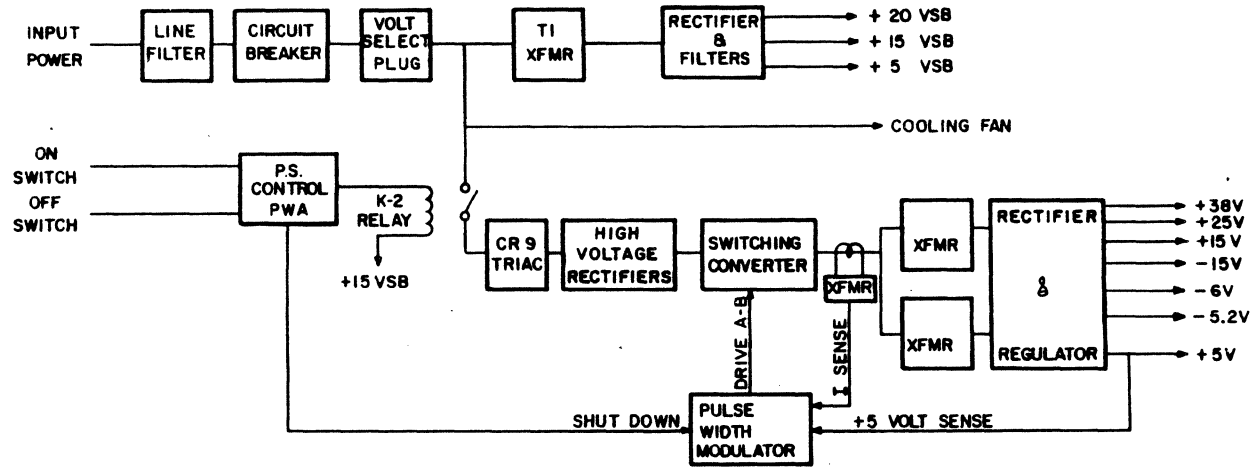


B. 7702934X Series Power Supply

Figure 4-3. Power Supply Block Diagram

Voltage Select PWA (7701896X Power Supplies)

This PWA consists of two connectors labeled J1A and J1B and three fuses. Two fuses are used in the input ac lines to the standby voltage supply, and the remaining fuse is used for protection of components in the internal high voltage circuit. The land layout of the PWA is such that the input lines from the line filter are matched to the input transformer in a configuration compatible with either 120V or 220-240V. Connector J1A is inserted into the main PWA if 120V is provided; connector J1B is used for the 220-240V requirement. Connector keys are provided on the PWA edge connectors to eliminate the possibility of incorrect insertion. The voltage select PWA is mounted vertically into the main power supply PWA at connector J6.

Voltage Select Plug (7702934X Power Supplies)

The voltage select plug consists of a 15-pin connector with a cable strain relief mounted on top. The plug is hard-wired to point E8 on the main power supply PWA. When 120V input is provided, the voltage select plug is inserted in the 120V receptacle (J11) on the main power supply PWA. When 220-240V input is provided, the voltage select plug is inserted in the 200V receptacle (J12) on the main power supply PWA.

Power Supply Control PWA

The power supply control PWA consists of the low voltage and over-voltage detect circuits, automatic power-on circuits, LOGIC ON/LOGIC OFF control panel indicator circuits, master clear circuit, and power-on latching circuit. Like the voltage select PWA, the control PWA is mounted vertically into the main power supply PWA at connector J8.

Main Power Supply PWA

The main power supply PWA is responsible for generating dc voltages for all functions in the transport. A brief description of the circuits comprising the main power supply PWA is as follows:

- Standby Voltage Circuit

  Standby voltages of +20, +15 and +5 volts are developed to provide a separate supply voltage for all other control circuits associated with the power supply. The standby voltages are used only within the power supply.

- Pulse Width Modulator

  This circuit monitors the +5 volt logic level and developes a pulse train to drive the half bridge switching converter. The pulse width modulator also provides the means by which abnormal conditions cause the shut-down of the output voltages.

- Half-Bridge Switching Converter

  This circuit contains the pulse width modulator, totem-pole driver circuits, high voltage rectifier, and transformers coupling the converted energy to the regulated dc voltage output circuits.

- Regulated dc Voltages

  The regulated dc voltages generated on the main PWA include +5V, -5.2V, -6V, ± 15V, +25V and +38V. The circuits consist of output transformers, full wave rectifiers, filtering networks and regulators.

## POWER SUPPLY FUNCTIONAL DESCRIPTION

The following discussion of circuit operation is presented in the sequence in which the power supply is activated. Reference should be made to the accompanying block diagrams or to the power supply schematics contained in the Logic Diagrams section of this manual.

### Input Power Selection

Input power (120V or 220-240V) is applied from the power line cord connected to the power supply receptacle and into a line filter for noise suppression. Power is then supplied to the transport power switch (circuit breaker) located on the tape deck. The switch portion of the circuit breaker is labeled 1 (ON) and 0 (OFF). With the circuit breaker placed in the 1 position, input power is routed through connectors and into the voltage select PWA on 7702896X Series power supplies or the voltage select plug on 7702934X Series power supplies. It is, at this point, that circuit selection is made for either 120V or 220-240 VAC. Refer to figure 4-4 for circuit differences.

## 7701896X Series Power Supplies

If 120V input power is being applied, the voltage select PWA is positioned so that connector J1A is plugged into the main power supply PWA. If an overload condition is present at transformer T1, the F3 and/or F2, 1/8A fuses will blow. The fuses are situated so that any external taps of the primary (i.e., pneumatic pump operation) do not affect the fuses which are used only for detection of an overload condition at transformer T1.

If 220-240V input power is being applied, then the voltage select PWA is positioned so that connector J1B is plugged into the main power supply PWA. With this configuration, the two primaries of transformer T1 are wired in series, with only the F3 fuse applicable to the circuit.

## 7702934X Series Power Supplies

If 120V input power is being applied, the voltage select plug is inserted in the 120V receptacle (J11) on the main power supply PWA. If an overload condition is present at transformer T1, the F1 and/or F2, 1/8A fuses will blow. The fuses are situated so that any external taps of the primary (i.e., pneumatic pump operation) do not affect the fuses, which are used only for detection of an overload condition at transformer T1.

If 220-240V input power is being applied, then the voltage select plug is inserted in the 220V receptacle on the main power supply PWA. With this configuration, the two primaries of transformer T1 are wired in series, with F1 and F2 fuses in series to the circuit.

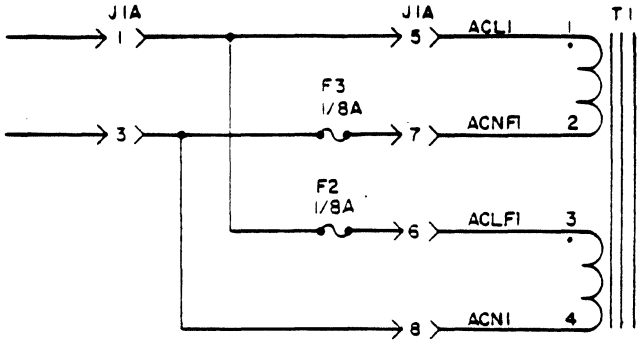


A. 120 VAC Power Input

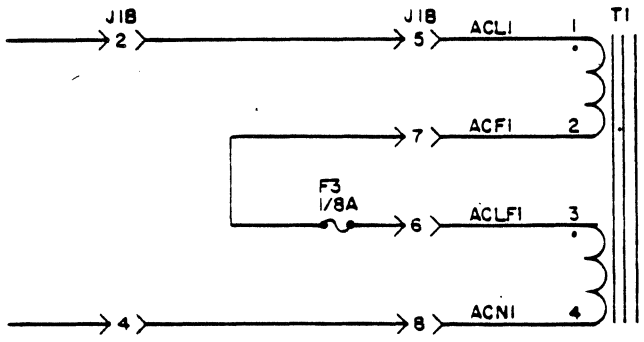


B. 220-240 VAC Power Input

Figure 4-4A. Voltage Select PWA
(7701896X Series Power Supply)

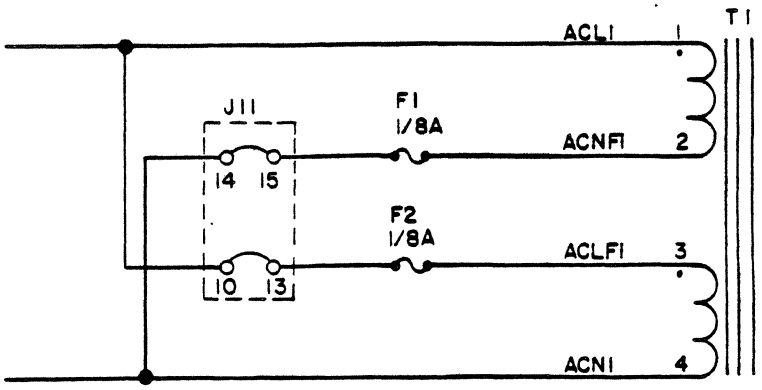


A. 120 VAC Power Input

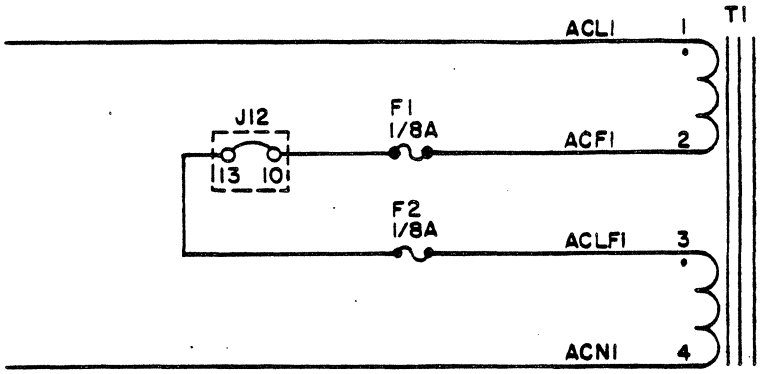


B. 220-240 VAC Power Input

Figure 4-4B. Voltage Select Plug
(7702934X Series Power Supply)

Also, note that at this point (power applied, circuit breaker ON), the ac line is applied to the cooling fan motor. The cooling blower has a three-line input and is configured as shown for either 120 or 220-240 volt application. Wiring to the neutral line is determined in the voltage select PWA.

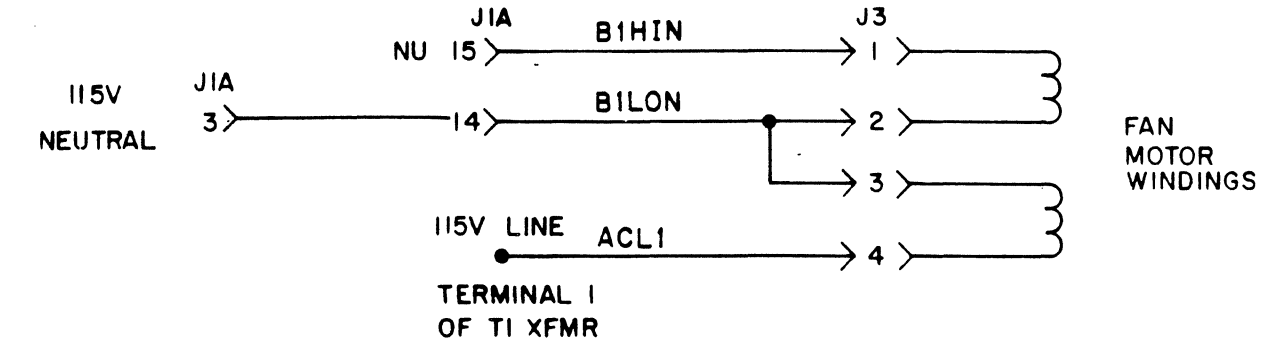


A. 120 VAC Power Input

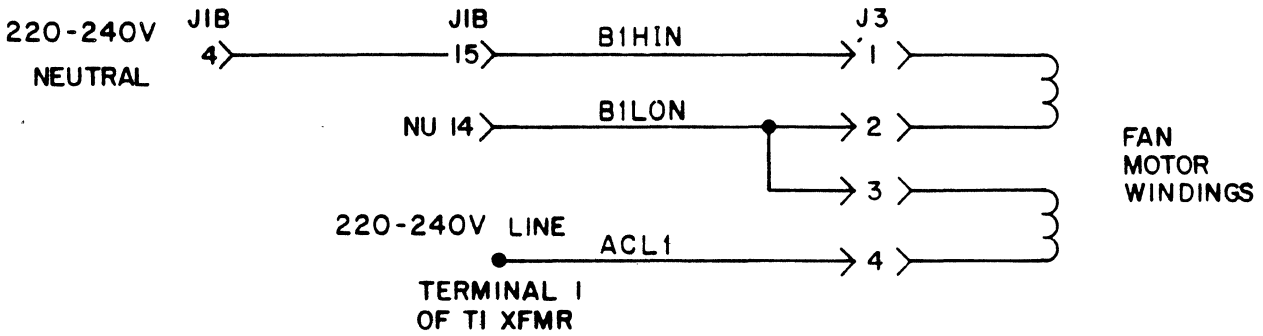


B. 220-240 VAC Power Input

Figure 4-5A. Cooling Fan Wiring
(7701896X Series Power Supply)

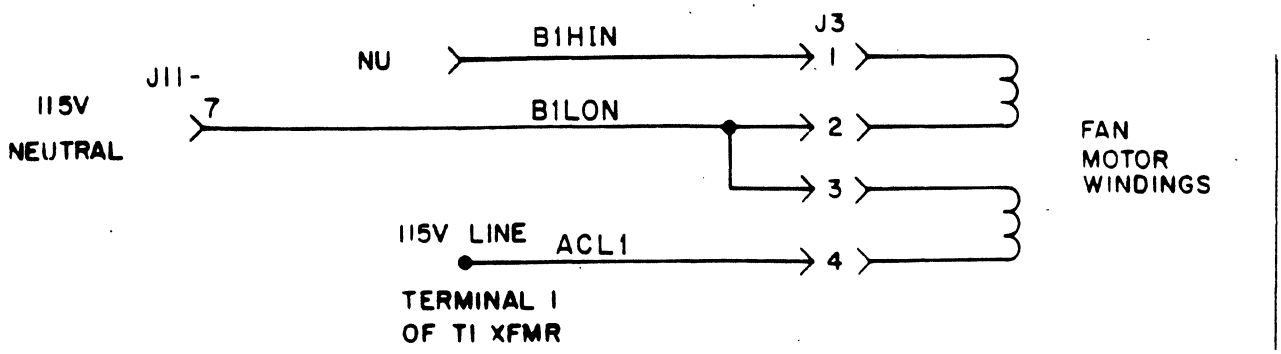


A. 120 VAC Power Input

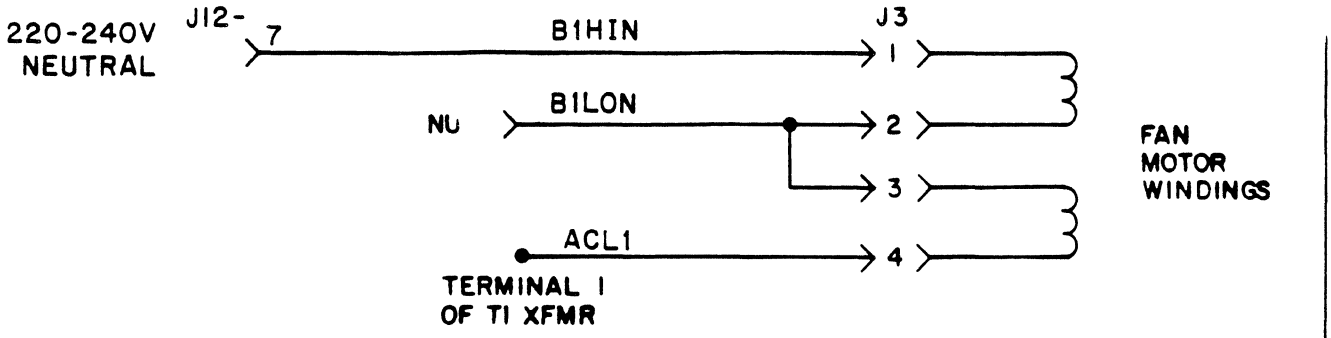


B. 220-240 VAC Power Input

Figure 4-5B. Cooling Fan Wiring
(7702934X Series Power Supply)

## Standby Voltage Generation

Standby voltages of +20, +15 and +5 volts are developed to provide a separate supply voltage for all control circuits associated with the power supply. These voltages are present when input power is applied and the circuit breaker is placed in the ON position. Development of the standby voltage is as follows:

Input power is applied to the T1 standby transformer and converted to a +20 standby voltage via a full wave rectifier and filter network. The +20 VSB is used as a control voltage for the half-bridge switching converter and is used to develop the +15 standby voltage.

The +15 standby voltage is developed by a LM317 voltage regulator. The resistor divider network R3/R4 determines the required output of this regulator. Plus 15 volts is used as a supply voltage for the K-1 pump enable relay, K-2 current-on relay, pulse width modulator, over and under voltage detect circuits and master clear circuits, and is used as the source voltage to develop +5 standby voltage.

The +5 standby voltage is developed by a LM317 voltage regulator circuit similar to that used on the +15 VSB line. Plus 5 VSB is used as the supply voltage to operate all of the TTL chips used throughout the power supply. The Q3 transistor located between the +5 and +15 volt circuits is used in the event of the +15V supply being shorted to the +5 volt supply. If the +5V supply increases above 6.2 volts, diode CR36 would forward bias transistor Q3, causing a +5V potential at the resistor divider network of the +15 VSB voltage regulator. The +15 VSB regulator would then be regulated to approximately 6.2 volts, eliminating any damage that would otherwise occur to the TTL circuits fed by the +5V supply.

The only effect of the standby voltage outside the power supply is the LOGIC OFF indicator on the control panel. The power-on flip-flop (reset at this time) turns on the LOGIC OFF indicator transistor and supplies current limited (20 ma) +20 VSB to the LOGIC OFF indicator.

While in the standby mode, the ION signal is a logic 1 (high), keeping the pulse width modulator in a shut-down condition.

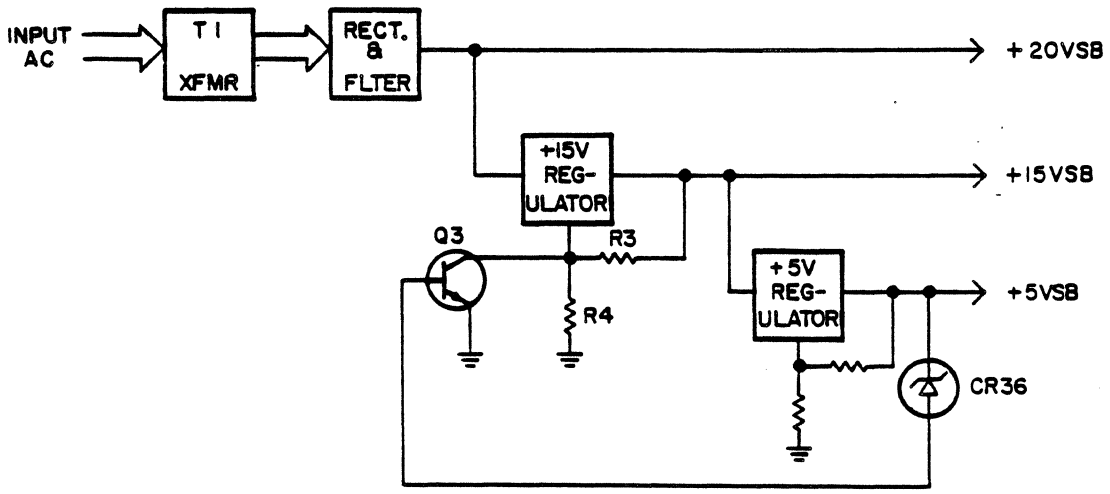


Figure 4-6. STAND-BY VOLTAGE GENERATION

Power-On Sequence (refer to figure 4-7)

The purpose of the power-on function is to provide the required regulated dc voltages to the transport control, formatter, and servo circuits. The power-on sequence also enables the abnormal (low/over) voltage detect circuits within the power supply.

Power-on is initiated by pressing the main circuit breaker switch. This action causes a momentary turn on of the power-on transistor which triggers the POWER-ON flip-flop to the set state. The set output of the flip-flop removes the ION (low) signal from the pulse width modulator, enabling a 25 KHz pulse train output (DRIVE A/DRIVE B). These outputs are the control signals to develop the +5, -6, ± 15, +25 and +38 volt logic levels used throughout the transport. An explanation of the pulse width modulator and dc circuits are discussed in succeeding paragraphs.

Concurrent with the development of the dc voltages, the POWER-ON flip-flop also initiates a power-on delay, which is used to inhibit detection of low voltage until the dc voltages are expected to attain their nominal voltage level. The reset output of the POWER-ON flip-flop initiates a RC time delay of approximately 300 ms. This delay prevents the ON DLY flip-flop from setting which, in turn, forces the LVCHECK flip-flop to remain reset. At the conclusion of the 300 ms delay, a comparator triggers the ON DLY flip-flop. The LVCHECK flip-flop is now primed to receive a Low Voltage signal, if that condition is detected. Low voltage detection is discussed in succeeding paragraphs.

The ON DLY flip-flop also removes one of three inhibits from the master clear circuit.

The master clear (MCLR) circuit is provided to the transport logic to steer the control functions to a starting or known state during ON/OFF and other detected abnormal conditions. The MCLR circuit contains a time delay circuit of approximately 150 ms, which is used to assure output voltage stability prior to inactivating Master Clear. Three inputs are used to control MCLR: PON (power-on flip-flop), LOWV (low voltage), and ONDLY (on-delay flip-flop). The output of the MCLR is held low active during transitional periods, and is allowed to de-activate to a high level after all three controlling inputs are logic high.

At the conclusion of master clear, the ON LED transistor is turned on which applies +5V to the LOGIC ON indicator on the control panel.

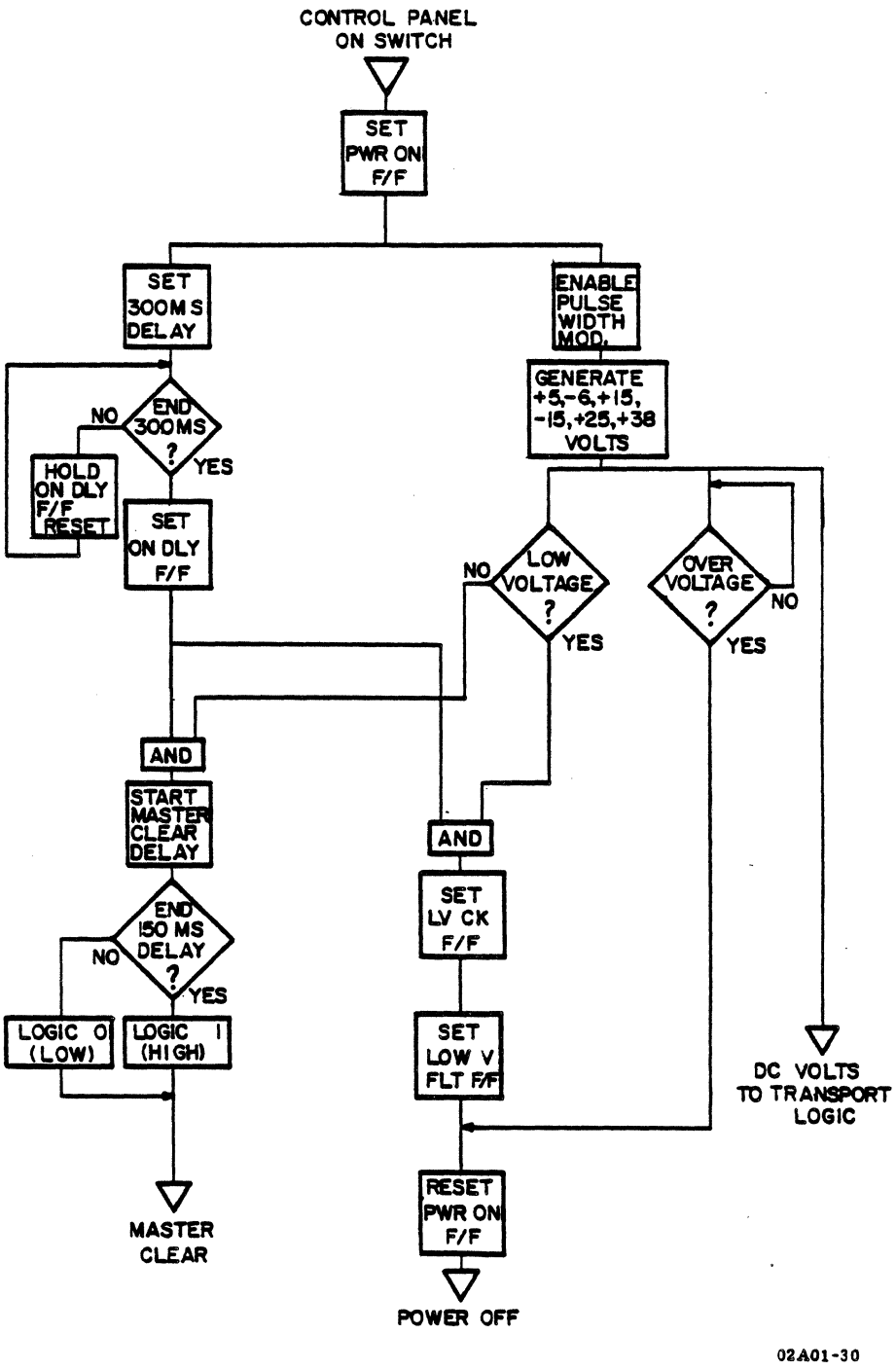


Figure 4-7. Power-On Sequence Flowchart

Switching Converter (Refer to figures 4-8 and 4-9)

The high voltage supply for the switching converter consists of two electrolytic capacitors charged through a diode bridge network. The output capacitors are configured so that during 120V operation the circuit functions as a voltage doubler, with the output capacitors connected in series. During 220-240V operation, the output capacitors are connected in series, and the input line is full-wave rectified. The resulting effect is that an output voltage of approximately 300V is supplied to the switching converter, regardless of whether 120V or 220-240 VAC is supplied. A simplified diagram of output capacitors and bridge configuration is shown in figures 4-8 and 4-9.

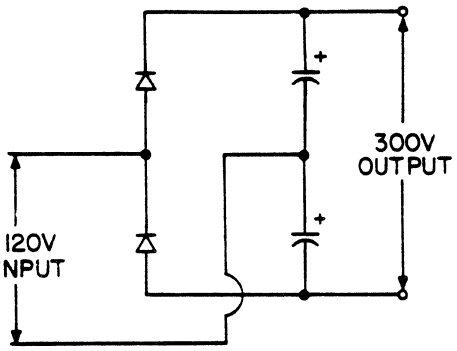


A. 120 VAC Input

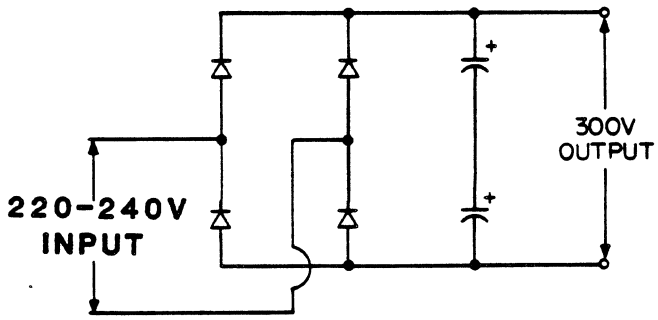


B. 220-240 VAC Input

Figure 4-8. High Voltage Generation

$\overline{\text{DRIVE A}}$ and $\overline{\text{DRIVE B}}$ (from the pulse width modulator) appear at the input of two peripheral drivers. These drivers, in the on state, positive input, provide a ground output. In the off state, the output is an open collector circuit. An example of circuit operation is as follows: As the signal level of $\overline{\text{DRIVE B}}$ goes negative, driver output becomes an open collector. This provides a circuit from R12, +20 VSB, through the primary of transformer T2, to ground of the output of the opposite peripheral driver. With terminal 2 of T2 at a positive potential, an induced positive voltage is also present at terminal 10 of the secondary of T2, causing transistor Q1 to turn on. With Q1 turned on, a current path is now provided via Q1, T2 windings 5 and 6, and through the primaries of transformers T4 and T5. The induced voltage in the secondary of T4 and T5 is rectified, as described in the dc Voltage paragraph. During conduction of Q1, the current flow through T2 terminals 5 and 6 applies a "load proportional" drive current to base of Q1.

$\overline{\text{DRIVE B}}$ peripheral driver is turned on (ground output) when the $\overline{\text{DRIVE B}}$ signal returns to the high level. With both $\overline{\text{DRIVE A}}$ and $\overline{\text{DRIVE B}}$ in the on state, the primary of T2 is essentially shorted, causing Q1 to turn off. The charge stored in capacitor C10, during conduction of Q1, is applied as a back bias to Q1 when T2 is shorted. This ensures an immediate turn off of Q1 to produce the resultant waveform shown in figure 4-9.

When $\overline{\text{DRIVE A}}$ signal goes negative, the peripheral driver pin 3 outputs an open collector, and a current path is provided in the opposite direction through transformer T2 primary winding. Terminal 7 of T2 secondary now has a positive reference and Q2 is turned on. Current flow through T4 and T5 is now in the opposite direction via Q2 and T2 windings 5 and 6.

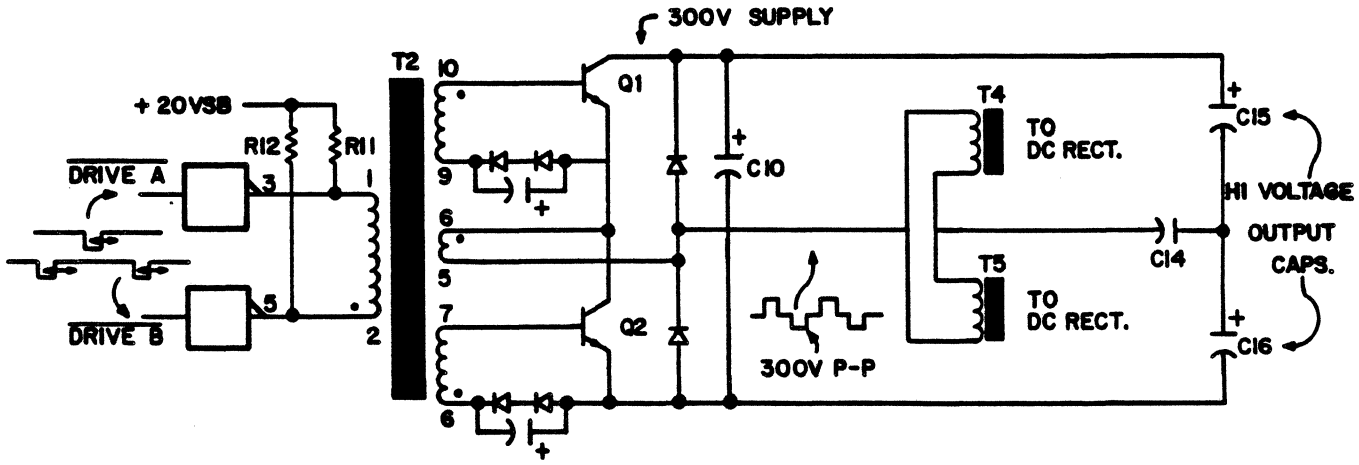


Figure 4-9. Switching Converter Circuit

## DC Voltages

The dc voltages generated by the power supply, for use throughout the transport, are as follows:

| VOLTAGE | USED ON |
|---|---|
| +5V | All PWAs as a supply voltage for TTL circuits |
| -6V | Read Amplifier Circuits |
| +15V | Servos, Power Amplifier and Read Amplifier VFO |
| -15V | Servos and Power Amplifier |
| +25V | Write Driver Circuits |
| +38V | Power Amplifier |

All dc voltages are generated and regulated in a similar manner. The output of the secondary windings of the Switching Converter transformers T4 and T5 are inputted to a full wave rectifier and filtered by a choke/capacitor filter network. Negative 6 volts and $\pm$ 15 volts are regulated by LM317 and LM337 voltage regulators, with resistor divider networks providing the required regulator programming. Plus 5 volts circuit does not require a voltage regulator due to the compensation circuit supplied by the pulse width generator discussed previously.

## Low Voltage/Over-Voltage Detection

The detector circuits consist of the various dc input voltages, voltage divider resistor networks, +2.5 reference voltage and LM339 voltage comparators. If any of the input dc voltages exceed the circuit threshold set up by the resistor networks and reference voltage, the comparator outputs a ground potential. This output then initiates a shut-down of the transport power supply. If the voltages are within the parameters listed below, the comparators have open outputs.

| NOMINAL VOLTAGE | LOW VOLTAGE THRESHOLD | OVER-VOLTAGE DETECTION |
|---|---|---|
| +5V | +4.53 | +6.0 |
| -6V | -5.0 | -6.96 |
| +15V | +12.58 | +17.25 |
| -15V | -12.58 | -17.25 |
| +25V | +21.25 | +28.13 |
| +38V | +25.25 | +50.3 |

## Power Supply Shut-Down

There are two circumstances which cause the transport to power-down. They are an over-voltage condition and a low-voltage condition.

- Over-Voltage

  When an over-voltage condition occurs, the voltage comparators of the detection circuit output a ground potential. This ground signal (labeled OFF) resets the power-on flip-flop. Signal ION becomes a logic 1 (high), causing the pulse width modulator to shut down. With no output from the modulator, all dc voltages to the transport are dropped. Concurrent with the shut-down of the pulse width modulator, the MASTER CLEAR signal goes to a logic 0 (low), thereby resetting affected circuits in the transport logic. The LOGIC OFF indicator on the control panel is lit by the shut-down condition.

- Low Voltage

  When a low voltage condition occurs, the voltage comparators of the detection circuit output a ground potential. This ground signal (labeled LOWV) sets the low voltage check flip-flop, if the ON DLY FF is set, causing LV FAULT FF to set which results in the power-on flip-flop going reset. With power-on flip-flop in the reset state, the power supply is shut down in the same manner as described in the over-voltage discussion above.

## PNEUMATIC SYSTEM

### FUNCTIONAL DESCRIPTION

The pneumatic system generates and distributes the air pressure and vacuum requirements of the transport. The pneumatic system consists of a carbon-vane centrifugal compressor, tape cleaner intake port, filter/regulator assembly, and pressure ports of the air bearings.

The compressor is enabled by the microprocessor during the load sequence. A PUMPEN signal from the logic energizes K-1 relay located in the power supply. The contacts of K-1 relay triggers a triac which gates the single phase input power to the pump motor. Motor wiring is configured for 120 or 220-240 volt input via the voltage select PWA in the power supply.

With the compressor motor operating, the air intake (vacuum) side of the pump is from the tape cleaner assembly. Refer to figure 4-10 for a block diagram of vacuum and pressure distribution. In addition to the tape cleaner intake, a small bleeder hole exists on the elbow fitting between the compressor and the plastic hose from the tape cleaner. The vacuum effect at the tape cleaner is approximately 8.0 inches $H_2O$.

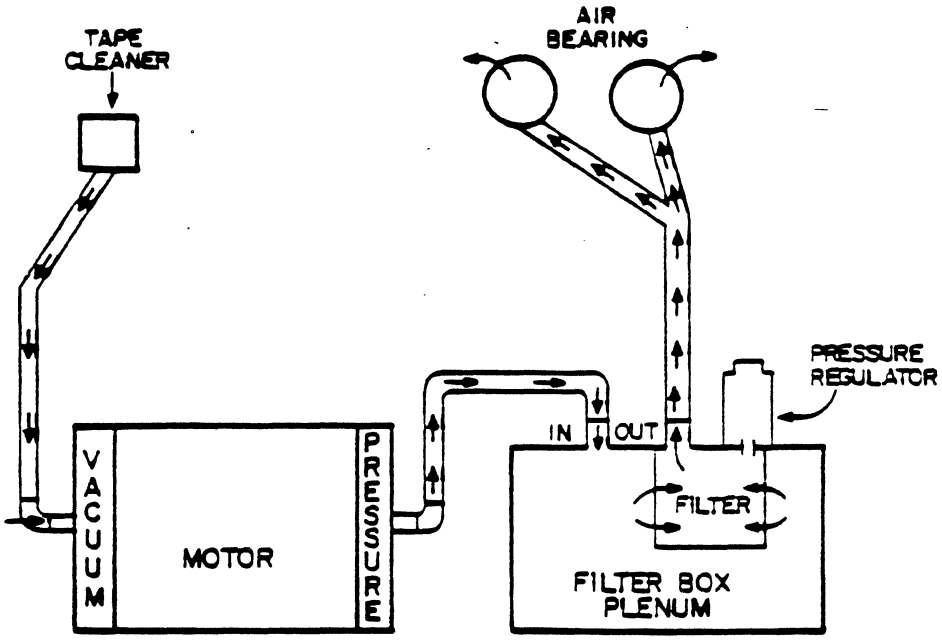


Figure 4-10. Vacuum and Pressure Distribution

The regulator portion of this assembly is a spring-controlled valve that causes any pressure above 2.3 PSI to be bled out of the system. The air pressure is filtered by a a high efficiency particle accumulator to clean the air prior to application to the air bearings. Air is forced through the filter and a hollow shaft. One end of the shaft is open and contacts the bleeder valve so that pressure in excess of 2.3 PSI is removed. The inside area of the filter (now regulated to 2.3 PSI) is applied to the deck plenum which directs the air pressure to the air bearings.

## PNEUMATIC SYSTEM OPERATIONAL DESCRIPTION

Operation of the pneumatic system is obtained via the power supply by the presence of 15 VSB and low active -PUMP signals. Together, these signals energize K-1 relay and trigger triac CR8. The output of triac CR8 provides the pump with the single phase operating voltage.

Figures 4-11A and 4-11B illustrate motor wiring configurations for 120 or 220-240 volt inputs via the voltage select PWA in the power supply.

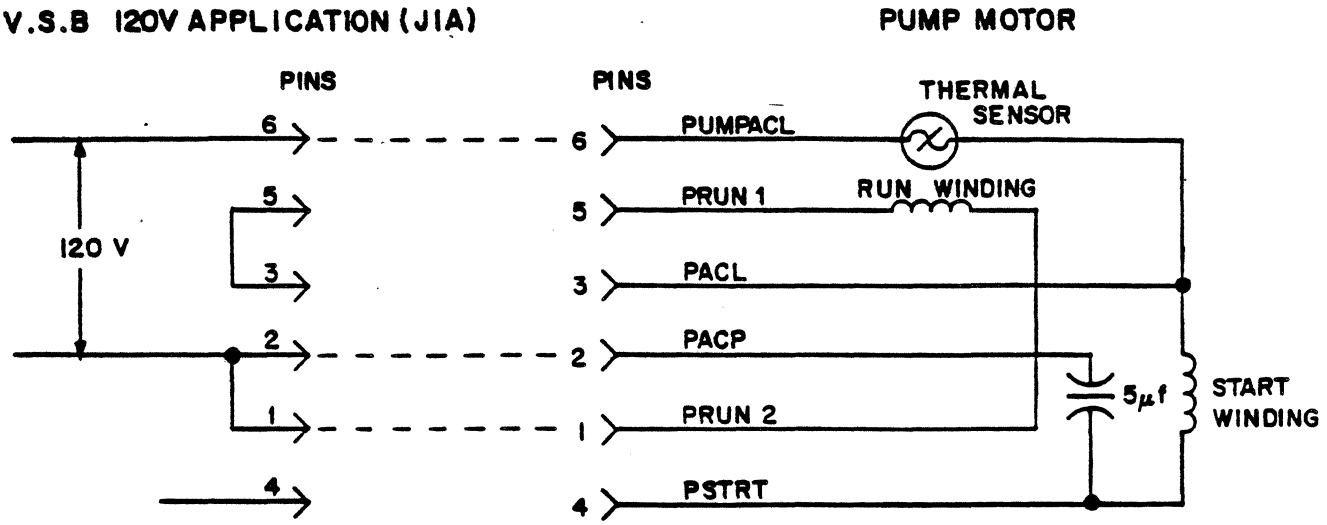


Figure 4-11A. Compressor Wiring 120 VAC Configuration

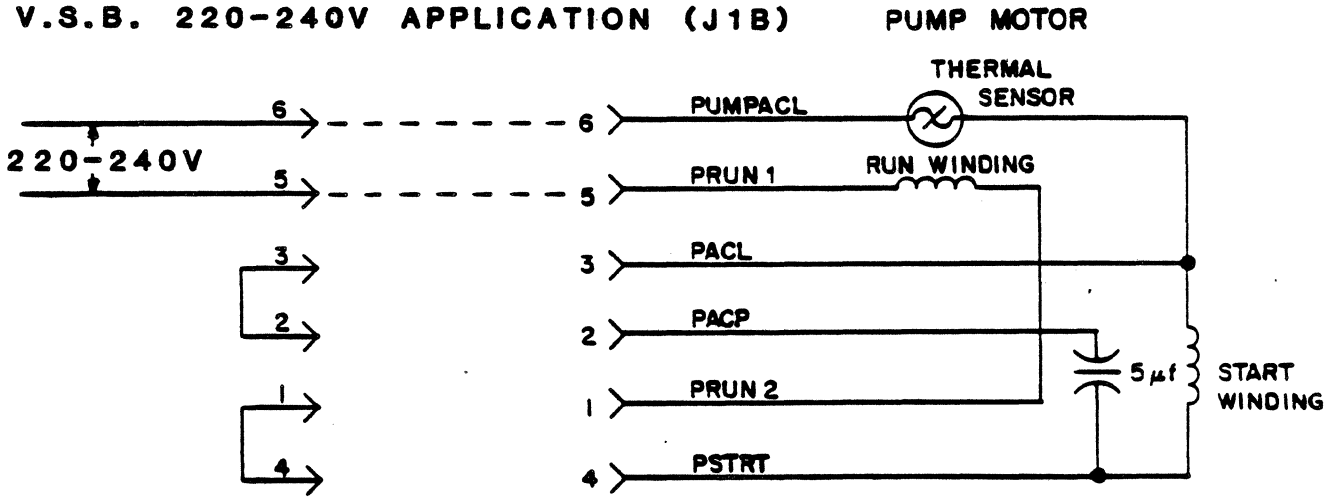


Figure 4-11B. Compressor Wiring 220-240 VAC Configuration

In the 120V mode of operation, single phase input power is applied to the motor via pins 2 and 6 of connector P2. During initial motor start-up, an external 5 uF capacitor is utilized to create a phase difference. In this configuration, the capacitor is connected in series with the start motor winding.

In the 220/240V mode of operation, single phase input power is applied to the motor via pins 5 and 6 of connector P2. During initial motor start-up, an external 5 uF capacitor is utilized to create a phase difference. In this configuration, the capacitor is connected in parallel with the start motor winding. For both configurations, the pump motor contains a self-recovering thermal sensor.

## SERVO-CONTROL PWA FUNCTIONAL DESCRIPTION

### GENERAL INFORMATION

The servo-control PWA has four main functions in the overall operation of the transport. They are as follows:

- o Formatter Commands/Responses
- o Transport Control/Monitoring
- o Control Panel Command Execution
- o Tape Motion/Servo Control

#### Formatter Commands/Responses

The transport must accept, validate, and dispatch for execution commands transmitted by the formatter. For commands such as WRITE and READ REVERSE, the PWA must determine, sequence and monitor the necessary tape motion to complete these commands. Communication between the formatter and transport is controlled by the respective servo/control and formatter write PWA microprocessors.

#### Transport Control/Monitoring

The servo/control PWA must respond to each of the outputs generated by the various sensors located throughout the drive. Some of the responses include BOT/EOT, FILE PROTECT, updating of the take-up reel radius dependent parameters, and the initiating of a verification sequence for a potential fault condition.

#### Control Panel Command Execution

The servo/control PWA communicates with the operator or customer engineer through the control panel to allow execution of manually initiated commands. These commands include the loading and unloading of tape or the executing of various diagnostic tests.

#### Tape Motion/Servo Control

In addition to the global activity of overseeing tape activity, the servo control logic becomes embedded in the take-up reel motor servo during stoplock and tape acceleration/deceleration. The servo/control PWA monitors tape speed and provides compensation for under/overspeed conditions to ensure constant speed during all tape motion operations.

## SERVO-CONTROL MICROPROCESSOR

The 6809 microprocessor is the controlling entity on the servo/control PWA. The microprocessor features include two 8-bit accumulators forming a 16-bit accumulator, two 16-bit index registers, a user stack pointer, a hardware stack pointer, and an 8-bit direct page register. The microprocessor has no internal RAM, is operated off a 4 MHz crystal, and has three-level priority interrupt inputs. All inputs and outputs of the 6809 and all other devices on the microprocessor bus are TTL compatible. Output or bi-directional devices connected to the microprocessor bus have tri-state drivers which are enabled only as a function of the microprocessor, E and Q clock outputs.

The input, output, and control lines extend out to the various peripheral and memory devices. Device selection is obtained by decoding a portion of the microprocessor address bus and gating it with the E and Q clocks.

A 6821 peripheral interface adapter is used for communication between the servo/control microprocessor and formatter write microprocessor. The PIA's 16 bi-directional, peripheral data lines (ports A and B), interrupt line (CA1), and peripheral control (CB1 and CB2) are used to establish a hand-shake communication between the two PWAs. The drive microprocessor gains the attention of the formatter by use of the INTR line which causes the formatter to interrogate the drive status/sense to determine cause for the interrupt.

In order for the processor to count servo tachs (forward and reverse) for tape acceleration, to maintain positional information during repositions, and to provide a real-time clock for the processor, two 6840 programmable timer PWAs are attached to the microprocessor bus and control lines. The PTM contains three 16-bit counters which provide various modes of operation including squarewave generation, gated delaying of signals, digital single-shot pulse generation, and pulse width modulation. The counters decrement on each clock period.

The functional and diagnostic programs for the processor reside in two read-only-memory (ROM) chips. When the ROM is enabled by the processor (through the address decoder), the data relative to the current processor address is conveyed to the data bus by the ROM within one microprocessor cycle time.

Various medium scale integration (MSI) devices are attached to the processor data and address bus to allow the microprocessor to interface to the servo, read, and write hardware. The MSI devices consist of bit input multiplexers, bit output latches, byte output latches, and related address decoding devices.

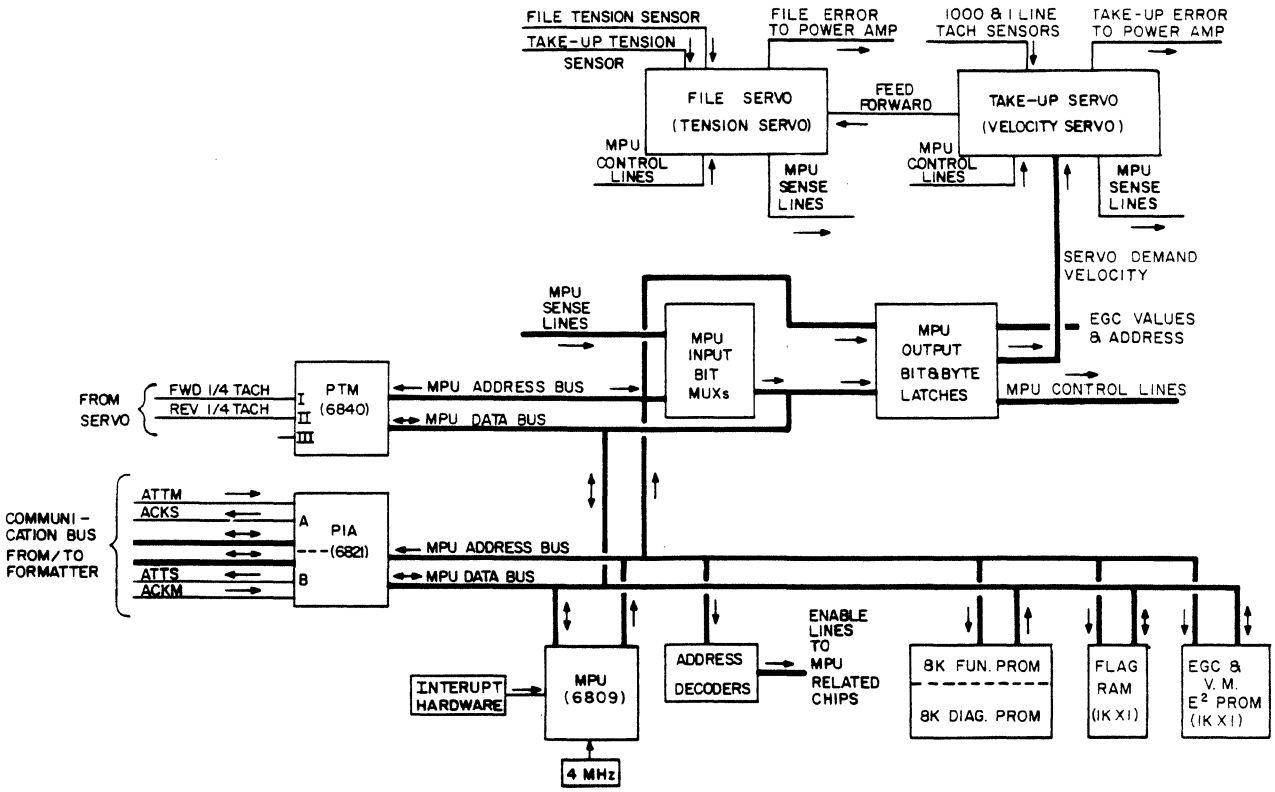


Figure 4-12. Servo/Control Block Diagram

Single input data bits are passed through the bit input multiplexers to the microprocessor data bus bit 7 (the most significant bit), upon selection of an input multiplexer. The selection of a given data bit and multiplexer is dependent on the address conveyed by the microprocessor to the multiplexer and address decoding devices.

Bit output latches are used to convey bytes of data from the microprocessor to the hardware. No connection to the microprocessor data bus is made. The selection of a given bit output latch is dependent on the address conveyed by the processor to the latch and address decoding devices. All latches are reset by the master reset line.

Byte output latches are used to pass bytes of data from the processor to the hardware. Output data is derived from the microprocessor data bus upon a write operation to the byte output latch address. The selection of a given byte output latch is dependent on the address conveyed by the microprocessor to the address decoding devices.

A non-volatile, 1K x 1 bit static RAM ($E^2$ PROM 2201A) is attached to the processor to provide both a means of storing the read amplifier gain values, velocity servo gain adjust multiplexer and write driver current levels, and a means of storage of flag bits used by the microprocessor to retain transport status. A two-position jumper is provided to prevent unintentional changes to the data contained in the $E^2$ PROM. Data can be transferred to the $E^2$ PROM only with the jumper in the STORE position.

## VELOCITY SERVO

The velocity servo consists of a digital-to-analog converter (DAC), decode flip-flops connected to a digital tachometer, operational amplifiers, and three presettable counters. The DAC converts 8 bits of information labeled demand velocity (DMDVEL) into a signal proportional to the desired velocity. The demand velocity can vary from 0 to 255 with complete control at any speed. The DAC output at 25 ips is 1/2 volt per radian per second. A radian per second is derived from the linear tape velocity (ips) divided by the radius of the take-up reel.

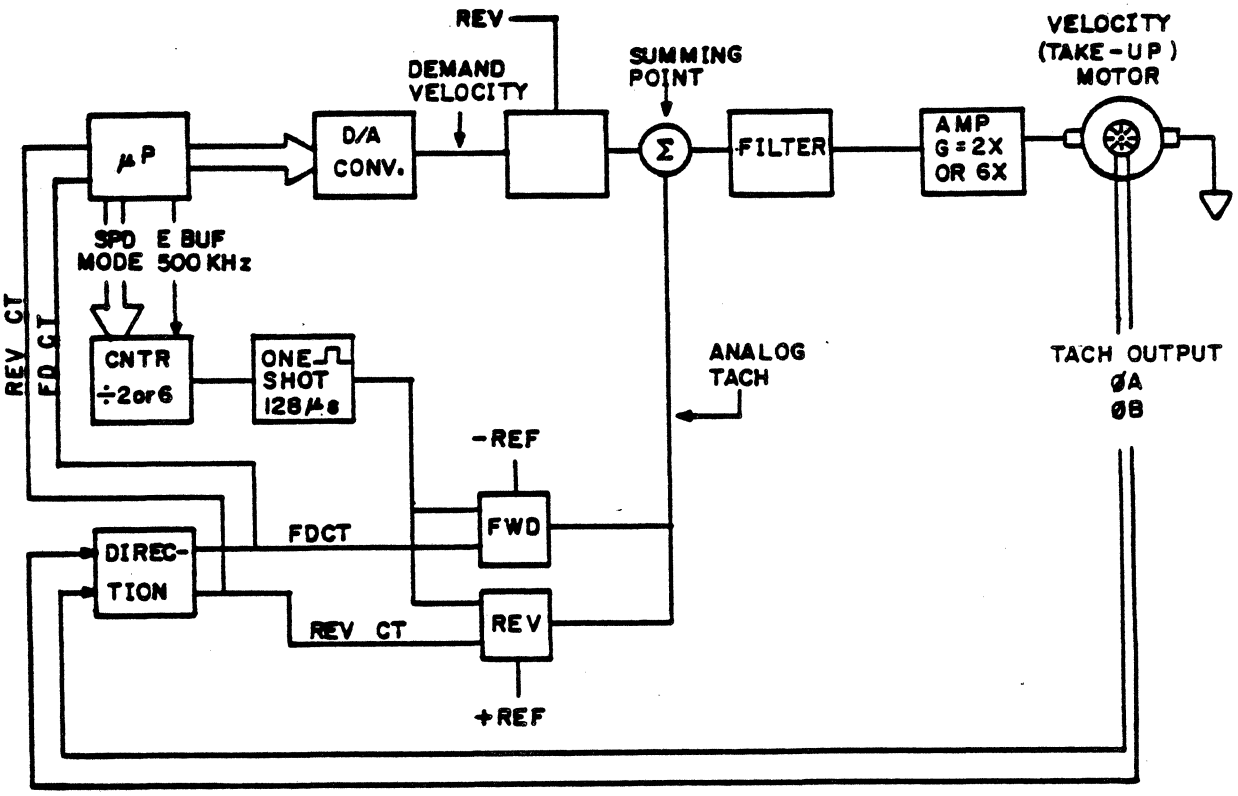


Figure 4-13. Velocity Servo - Simplified

At the beginning of tape (BOT), the radius is 2.56 inches. At the end of tape (EOT), the radius is approximately 4.9 inches when using a 2400 foot reel of tape. The voltage at the output of the DAC is approximately 4.88 volts at 25 ips (speed divided by 2.56 inches) at BOT and 2.5 volts at EOT. The voltage at the DAC output will not change when 75 ips is selected, however, the rotational speed will change accordingly. The signal REV determines the polarity of the analog demand velocity signal for rotation of the take-up motor in each direction.

Rotational velocity is generated and referred to as "analog tachometer" (ANALOG TACH). The analog tach (TP9) is also proportional to 1/2 volt in the 25 ips mode. In the 75 ips or rewind mode, the analog tach is less than the rotational speed. The analog tach is derived from the 2-phase, 1000-line tachometer physically mounted on the rear of the velocity motor. The output signals, phase A and phase B, are decoded into direction and divided down (depending on the speed selected). The divided tach triggers a 128 microsecond one-shot. The decoded direction is logically ANDed with the 128 microsecond one-shot and then filtered to become the analog tach.

The analog tach is subtracted from the demand velocity and compensated with a lag-lead filter. This signal is then multiplied by 2 or 6, depending on the speed, and becomes the take-up error (TUER). The take-up error is proportional to the desired current in the velocity motor and is equivalent to 1.0 volt per amp.

## TENSION SERVO

Refer to logic diagrams located in section 5 and block diagrams for circuit identification.

The tension servo system is comprised of two tension servo transducers, input operational amplifiers, reference voltage inputs, take-up motor error input, summing circuit, analog switch circuit for mode selection, and above/below tension level comparators for servo shut-down in the event of component failure.

The two tension sensors are located on either side of the magnetic head. One sensor is located between the velocity servo motor (take-up reel) and the magnetic head, and the second is located between the tension servo motor (supply reel) and magnetic head.

During a load sequence, prior to starting the pump motor, the microprocessor sweeps TTENOFF and FTENOFF levels from their maximum voltage to the minimum voltage. At the point at which the TTENOFF and FTENOFF zero their respective operational amps, the TTENZERO and FTENZERO signals toggle causing the microprocessor to stop the changing sweep levels. The effect of this action is to determine the point at which both tension transducers have a zero offset. The microprocessor maintains the TTENOFF and FTENOFF levels at the determined offset until the next load sequence.

The inputs to the tension servo circuit are TTENTRANS, FTENTRANS, + REF and TUER. The TTENTRANS and FTENTRANS signals come directly from the tension sensors with a signal input proportional to the variance of tension felt by the sensor. The tension reference is derived from a 6.9 volt supply and a 1.78M ohm resistor. This reference voltage is equivalent to 16 ounces of tape tension, and is used to bias the circuit so that 8 ounces of tension is developed. The fourth input is the TUER signal and is proportional to the current in the take-up motor at any given time.

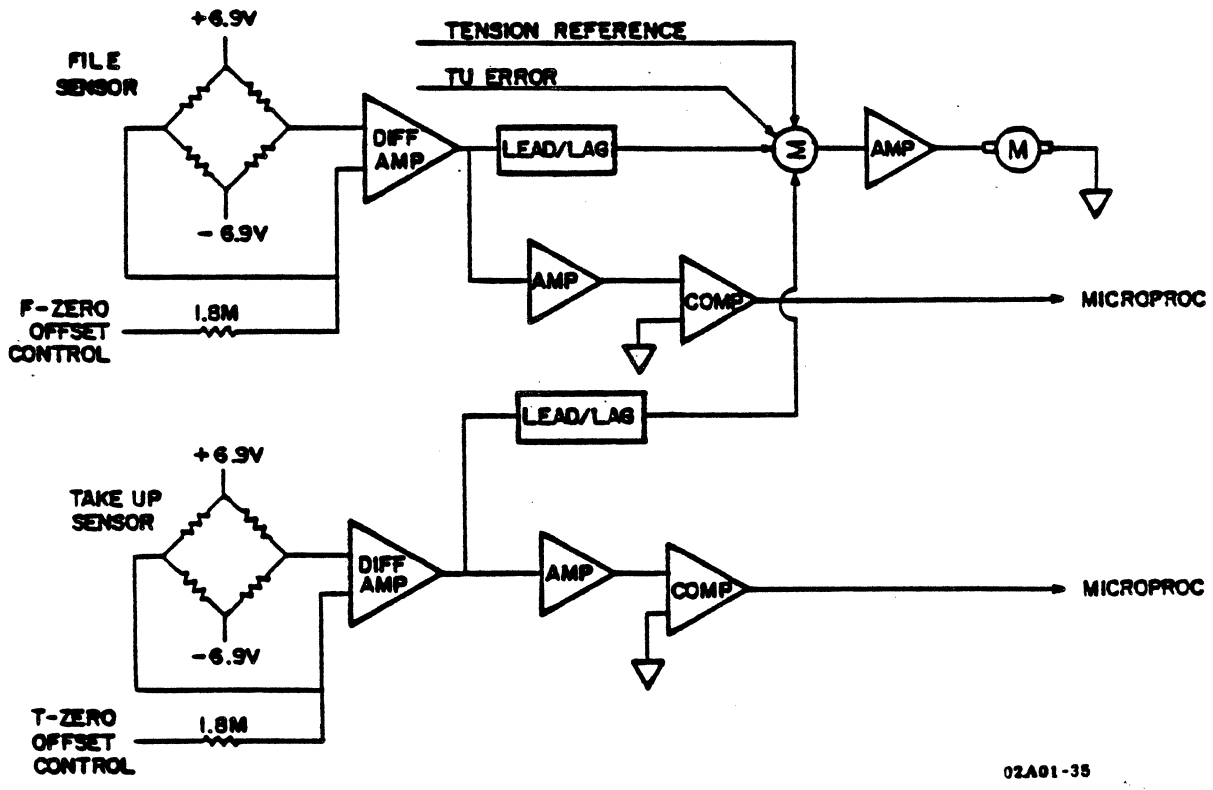


Figure 4-14. Tension Servo - Simplified

At an optimum condition, where both sensors are sensing 8 ounces of tension, the 16 ounce (+ REF) reference is effectively neutralized. The only dynamic effect on the circuit, at this time, would be the action of the take-up reel motor. With the TUER being summed with the neutralized tension/reference voltage inputs, the tension motor (supply) reacts proportionally to the current in the take-up motor, as indicated by TUER.

Any variance in tape tension would cause a change in the sensor op amps' outputs. This voltage output is subtracted from the tension reference, with the result summed with TUER. The difference of all these signals is multiplied by a high gain amplifier when tape is in motion.

The PRKD input term to the tension servo is active during a Parked or No Tape Motion condition. With PRKD active, the operational amplifier used as a high gain multiplier, after the summing network, is switched to a low gain amplifier.

The above/below tension limit protection circuits consist of a series of comparators, with inputs referenced to predetermined voltage levels corresponding to high or low tension levels. If above or below tension levels are sensed on either of the tension sensors, the microprocessor is notified via signals TAUTL, TBLTL, FAUTL or FBLTL and a shut-down of the servo is initiated. Refer to figure 4-12 for a simplified presentation of this circuit.

## POWER DRIVER PWA

The function of the power driver PWA is to convert voltage error values received from the servo/control PWA into proportional currents driving the take-up motor and the supply (file) motor. The torques created by the motors are applied as acceleration and tension to the tape between the two motors. The power driver electronics assembly consists of two identical amplifiers. The operation of one amplifier is described below.

The driver has an H-bridge voltage switcher driven by a pulse width modulation (PWM) converter contained within a current feed-back loop. The resulting current is uninterrupted, but varies with an average value proportional to the input voltage, with a gain factor of 1 amp per volt. A soft dead-band of $\pm$ 300 mv exists where the gain factor quickly approaches zero within this region of input.

An overall block diagram is shown in figure 4-15. The signal flow proceeds from the differential error input through U1 with unity gain summing, with the current feed-back voltage from U2. The resulting difference is multiplied by five through U3 and compared to two triangle voltages by comparators U4 and U5. These waveforms are shown in figure 4-16. Two quadrants of input are shown to point out that only one of the negative-active outputs from U4 and U5 exists at any given time. The peripheral drivers U6 and U7 connect the PWM outputs from the comparators to the appropriate transistors Q1 through Q4. At this point, it can be seen how the enabling to the H-bridge is performed. The gating of $\overline{\text{SVPEN}}$ and $\overline{\text{SVEN}}$ allow diagnostic control. The SW5 signal (Switched +5 Volts) is applied as the source of drive to the lower bridge. It can be quickly removed during Power On and Off sequencing or during a high over-current condition.

The circuitry for providing SW5 is shown in figure 4-15. Motor current is sensed through the appropriate resistor R1 or R2 and connected to U2 through a low-pass filter. The filter removes switch-over spikes caused by shorting currents through commutating diodes CR1 through CR4 and non- aligned switching times of the two transistors in any one diagonal. The filter plays no part in compensation for loop stability or rejecting the 20 KHz current ripple.

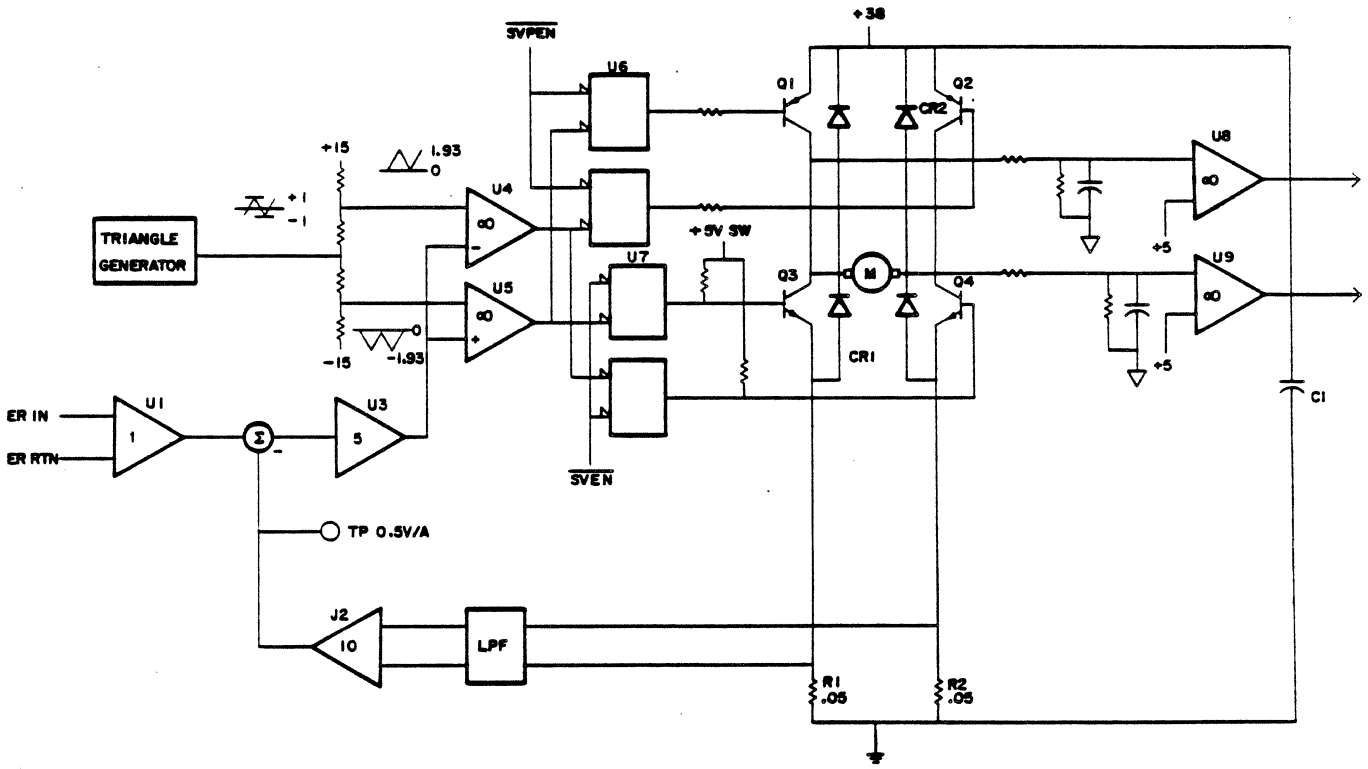


Figure 4-15. Power Driver Block Diagram

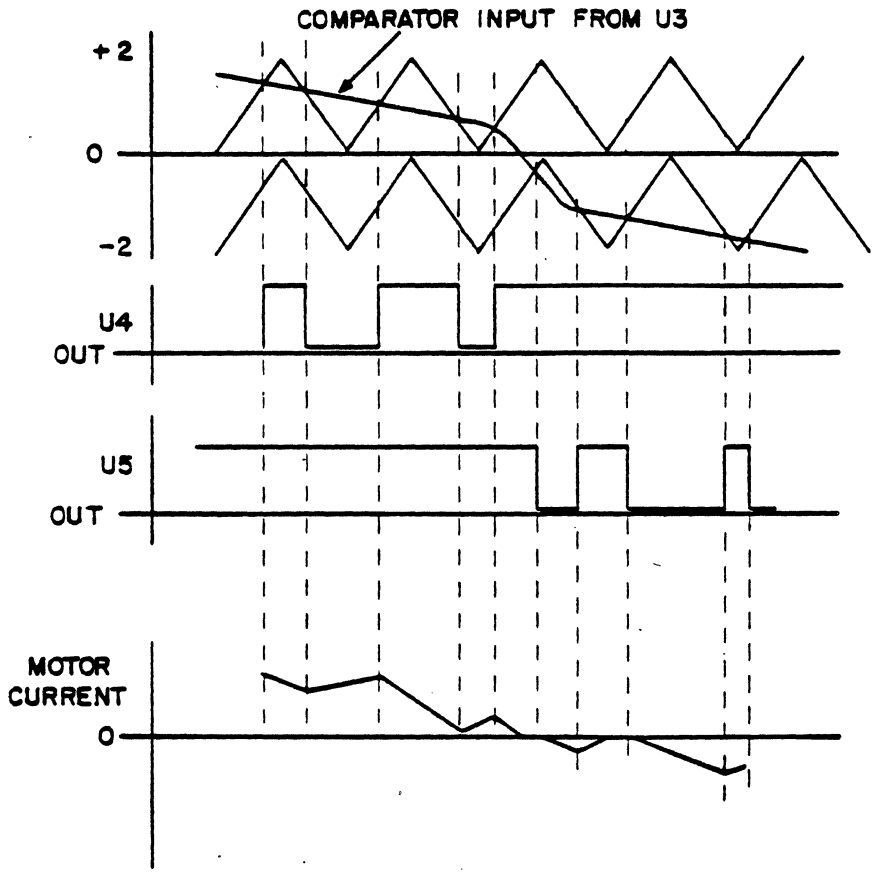


Figure 4-16. Power Driver Waveforms

Figure 4-17 shows a quadrant of the H-bridge and the states of current flow for a given dc input. In state 1, current is flowing in Q1 and Q4, 'charging' the motor. In state 2, the motor is 'discharging' through CR1 and CR2 and through CR3, thus charging C1. Capacitor C1 is discharging during state 1; the capacitor is charged by the power supply during state 2.

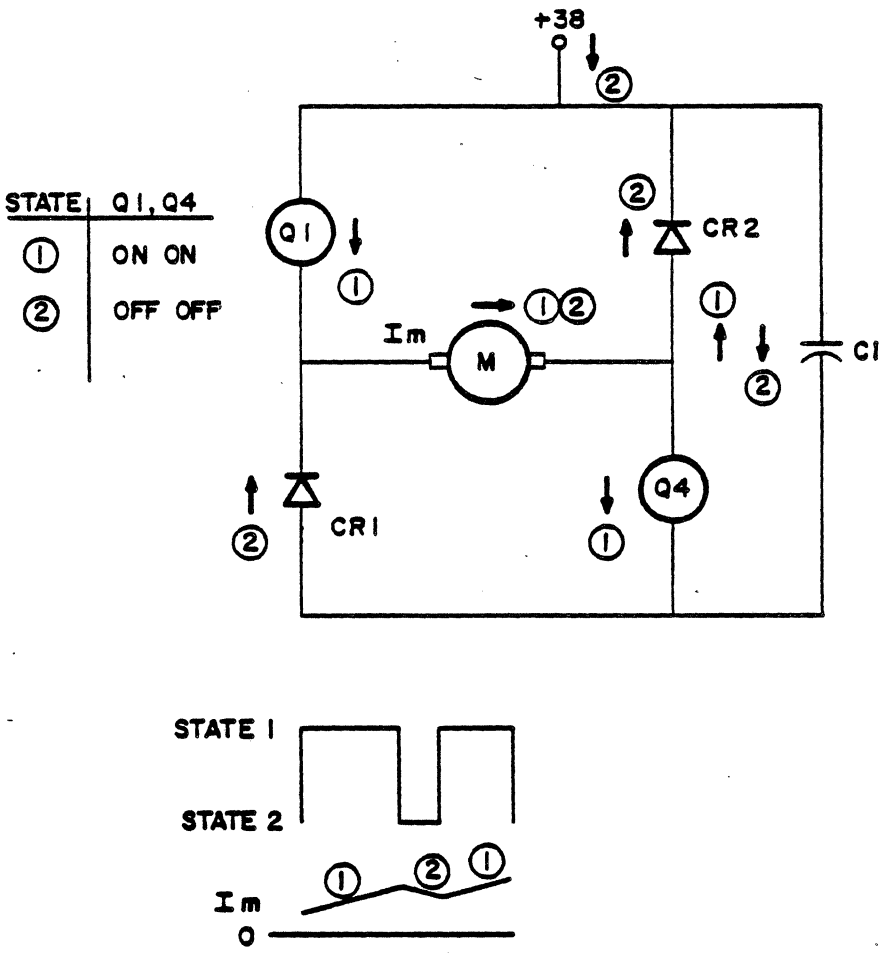


Figure 4-17. H-Bridge Switching

A block diagram of the Switched 5-Volt line for biasing the lower stages of the H-bridge, and also the peripheral drivers for biasing the upper stage, is shown in figure 4-18. The 5-volt shut-down is needed because the peripheral drivers become uncontrolled below 4 volts, thereby turning on both sides of the bridge in the presence of 38 volts. The MASTER CLEAR signal from the power supply and the 4.2 volt reference make use of comparator U4 for shut-down.

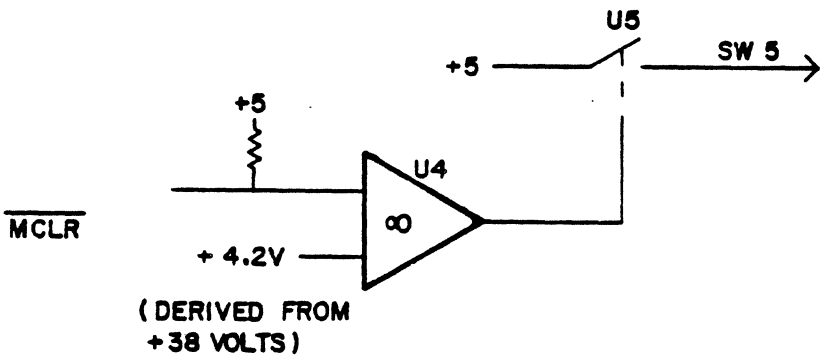


Figure 4-18. Switched +5 Volts

## WRITE DRIVER PWA

The function of the write driver PWA is to convert the digital data received from the formatter to an analog write current for writing data on tape. The write driver contains the necessary control circuits for generating the required voltages and currents used internally to perform the write data function.

## WRITE CONTROL

The control circuits are enabled by the absence of both FILE PRO and REWIND as shown in the write control block diagram (figure 4-19). The absence of these signals, along with a +24 volt supply, turn on transistors E1/Q1, outputting a voltage greater than +22 volts. This voltage is used along with ERASE to enable erase head current and the erase current detect output at TP2. The +22V is also an input to a voltage regulator for generation of +15V. This voltage is used to enable the ac bias generator and also develops, through F1/G3 transistors, the +15 WE and +5 WE supply voltages.

Write current is sensed by the voltage developed across a 10 ohm resistor so that write current (-WR CURR) is a logic low when write current is flowing through the head coils.

The erase circuit is enabled by ERASE when FILE PRO and REWIND are not true. F1 transistor turns on allowing erase current to flow through the erase head coil.

A +5V fault detect circuit consists of a differentiator with inputs of +5V and +5VR. Any variance of the +5V input will cause the collector output of Q1 to go from +22V to 0 volts, thus removing the write driver supply voltages and shutting down the write current.

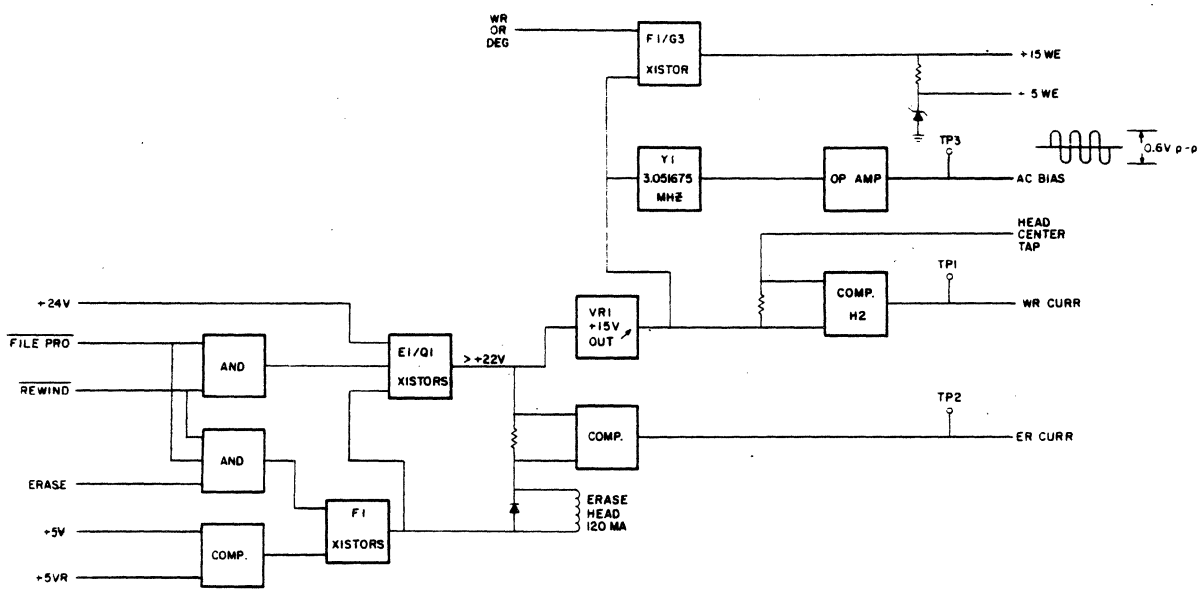


Figure 4-19. Write Control Block Diagram

WRITE DRIVER LSI

The write driver is a large scale integrated (LSI) circuit designed to output a write current with a step and ac bias. The waveform of the write driver is the summation of ac bias current, step current, and write current. The transistors used on the drive 1 and 2 outputs of the LSI are voltage amplifiers used to amplify the relatively low voltage drive ouputs to the write head coils.

The data pulse output of the LSI is used to trigger an external timing circuit. The output pulse width of timer B4 is dependent on the resistor selection through a multiplexer, which is gated by high or low speed and PE or GCR operating modes. The output pulse determines the write compensation times for the write driver.

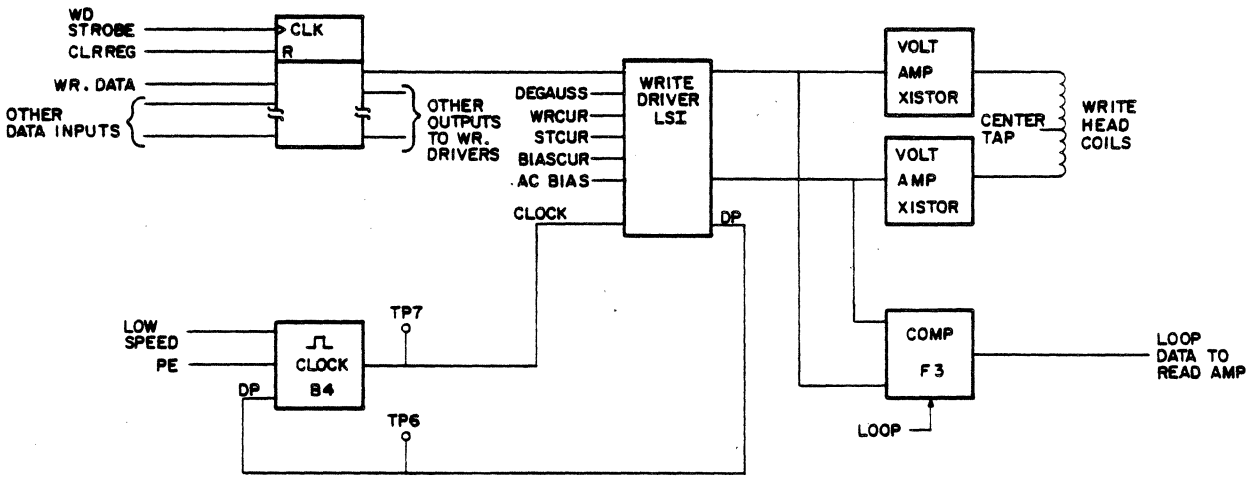


Figure 4-20. Write Driver Block Diagram

DEGAUSSING

During a write operation, current flow through the write head causes residual magnetism to build up around the write coils. If the residual magnetism is not neutralized, partial tape erasure is possible during succeeding tape operations.

In order to prevent this unwanted magnetism, the transport performs a degaussing operation at the conclusion of a write function. See figure 4-21. When the write enable (-WR EN) signal goes from a logic low to a logic high, the microprocessor refreshes the write reference (+WR REF) signal to its maximum voltage, charging C18 refresh capacitor. The microprocessor then stops the refresh cycle, allowing the refresh degauss capacitor to discharge. The write current operational amplifiers see a decreasing positive voltage, the affect of which results in an exponential decay of write current. At the same time that the capacitor is allowed to discharge, the write data input lines are switched at a 10 KHz rate. As the write current is switched at 10 KHz, the exponential decay of the current waveform causes any residual magnetism to be neutralized.

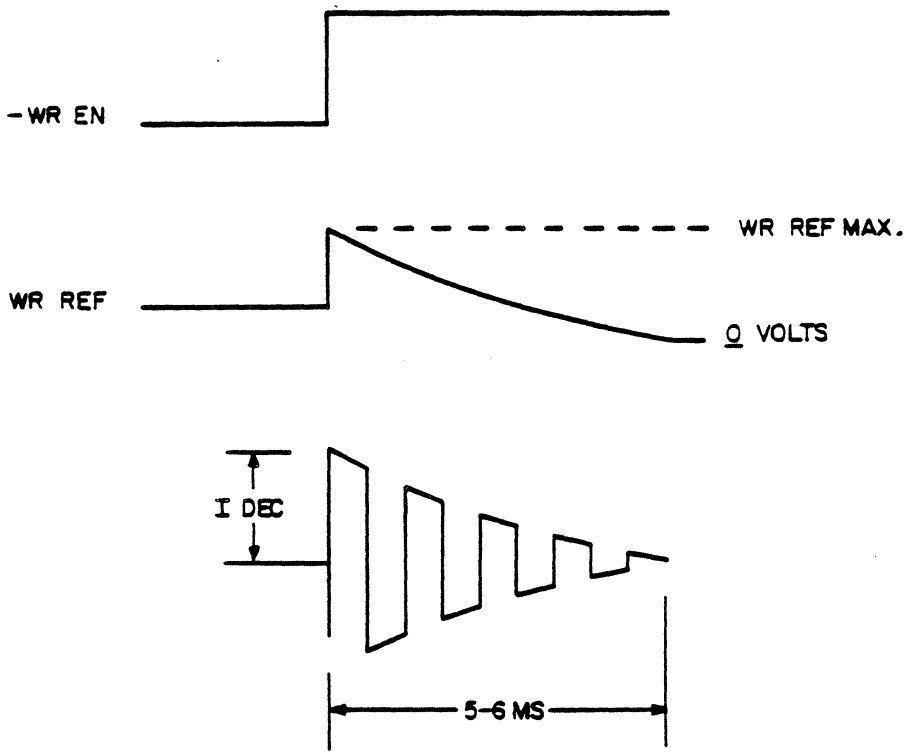


Figure 4-21. Degaussing Waveform

## READ AMPLIFIER PWA

A read operation is initiated from the controller during any read or write operation. As tape motion is initiated and tape passes across the read head coils, recorded data on the tape induces a voltage in the head coils. This voltage has to be amplified, and circuit selection made, depending on tape speed and recording mode. The entire read chain is responsible for detection of data, amplification of the low amplitude readback signal, and conversion of the analog signal to a digital TTL logic level for use in the formatter and interface portions of the transport. See figure 4-22.

### READ RECOVERY

As data is detected when tape passes the read head, the induced voltage is differentially coupled to a preamplifier to help reduce common mode noise while amplifying the relatively weak read head signal. The amplification factor at this stage is determined by a programmable gain control circuit that is selected by the microprocessor. The amplified signal is then differentially coupled to a second stage for an additional gain of 20.

The third stage in the read chain is a selectable gain, low pass filter providing roll-off of the high and low end of the read signal. Gain of this stage is dependent on the speed and recording mode that the microprocessor selects.

The fourth stage is both a programmable bandpass filter and differentiator. The bandpass filter, with a frequency selected by the speed and recording mode, sets the upper and lower frequency limits of the input signal.

The fourth stage output is connected to both the zero cross detector and envelope threshold level detector. The threshold circuit compares the single-ended output voltage of the fourth stage with a clip level voltage labeled TH1 and TH2. The clip levels are a percentage of the nominal input voltage and are predetermined by the microprocessor, depending on the type of operation being performed. The threshold detector turns on with a delay of approximately 6.8 microseconds in high speed (75 ips) or 27 microseconds in low speed (25 ips), and turns off with a delay of approximately 12.3 microseconds in high speed or 48 microseconds in low speed. Envelope detection takes place only when the processed read signal overcomes the microprocessor-controlled clip levels. This microprocessor-controlled level can be between 0 and 100% of the read signal.

Output from the envelope detection/clip circuits is ANDed with the output of the zero cross detector to enable the transfer of read data from the read amplifier PWA.

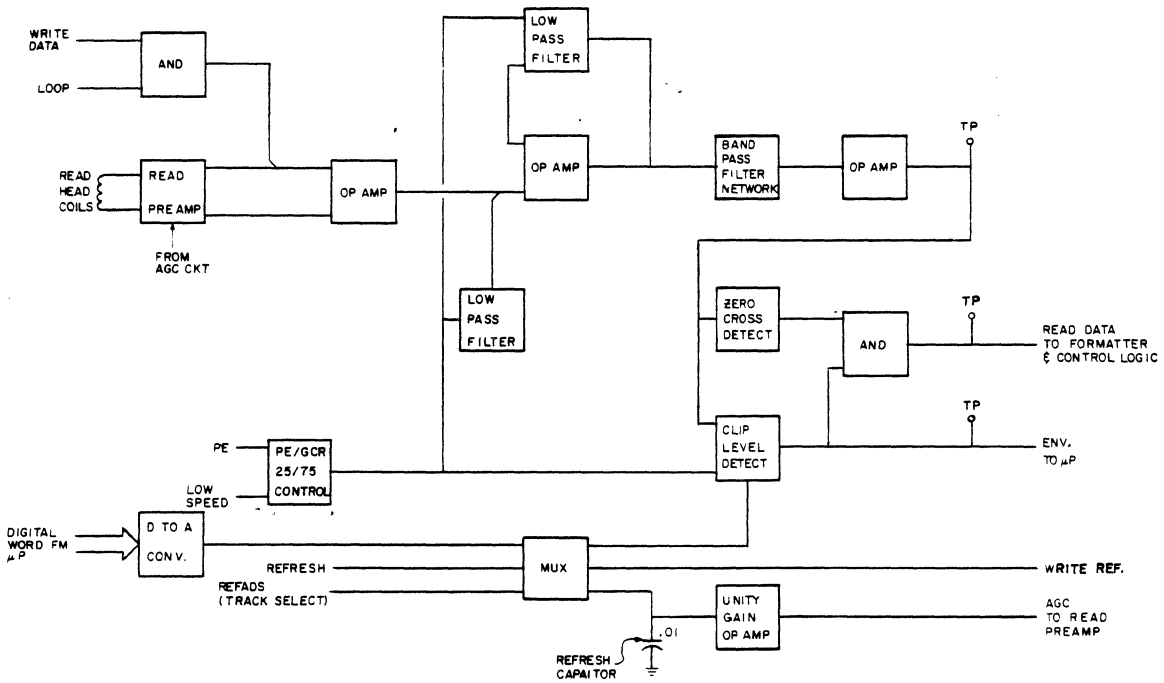


Figure 4-22. Read Amplifier Block Diagram

Automatic Gain Control (AGC)

AGC is designed to replace the potentiometer formerly used to determine the readback amplitude of recorded data.

In PE mode, the circuit is activated through the use of field service diagnostics when the PWA or magnetic head is replaced, or if reported errors are such that the field service determines the need to activate AGC. In GCR mode, the circuit is activated every time tape is read from the BOT marker. When the formatter recognizes the GCR ID burst, the AGC circuit is enabled so that the first stage amplifier gains can be set during the ARA burst.

The AGC lines during normal operation are constant, and provide the appropriate input to the first stage amplifiers to set a nominal output of 2.0 volts peak-to-peak at the analog test point. This output voltage may vary slightly due to magnetic head wear or the type of magnetic tape being used.

Operation of the AGC circuit during the off-line field service diagnostics in PE or during the ARA burst in GCR is as follows: The readback signals are sampled through the ENV outputs of the read chain, with an AGC clip level set at 95%. The test is initiated with a binary bit count of 128 (80 Hex) applied to the digital-to-analog converter (DAC). The output voltage of the DAC is then applied to an analog multiplexer. The microprocessor provides the input gating to the multiplexer so that the voltage conversion of the 128 count is applied to each of the nine read circuits on an individual basis.

Using one read channel for discussion purposes, AGC voltages are set up as follows: The voltage equivalent of the binary 128 count is gated through the analog multiplexer and charges a 0.01 uF capacitor to the value whereby, the read amplifiers have a mid-point gain. As data is read from tape, the output of the read amplifier is sampled by the envelope comparator. If the ENV signal is low, the microprocessor uses a successive approximation method of the binary count to the DAC so that an optimum AGC voltage is applied to the read amplifiers. If the ENV signal is low or inactive, the microprocessor lowers the binary count by half (64) to the DAC. The DAC then outputs a voltage equivalent to the 64 count to the AGC capacitors. The read amplifier gain is increased and the ENV signal is again sampled by the microprocessor. The microprocessor adjusts the binary count either up or down by half of the previous count, depending on whether the ENV signal is active or inactive.

This method of successive approximation is continued until the microprocessor determines, via the ENV signal, that the read gain is optimum. In this manner, the count "zeros in" on the point at which the ENV signal is active except for extraneous pulses going inactive. At this point, it can be assumed that, if the ENV signal is mostly active at the 95% AGC clip level, then when the normal clip level is used, then ENV signal will be a solid active level.

The binary count for each read channel is stored in memory. During normal on-line operation, the microprocessor will access memory every 11 milliseconds, and the AGC voltage charges the 0.01 uF refresher capacitor to maintain a constant gain of the first stage read amplifier.

LOOP DATA

The LOOP signal is used to exercise the read/write circuits without tape motion. In the read circuits, the signal LOOP turns on a transistor and FET circuit so that the read chain is effectively isolated from the read preamplifier and magnetic head. This isolation allows the loop write data to be connected to the read chain for diagnostic purposes.

## FORMATTER PWAs

The formatter PWAs, comprising the formatter read and formatter write PWAs, are located functionally between the interface PWA and the read/write/servo control logic set. The formatter PWAs perform the following operations:

1. Translate I/O commands sent from the host system for the tape drive.
2. Encode and decode data to and from PE format or GCR format.
3. In write operations, generate tape control and identification marks. In read operations, delete tape control and identification marks.
4. Generate and monitor data error detection codes and perform error correction "on-the-fly".
5. Monitor and report Hard Error (HER) conditions.
6. Control reinstruct times when in streaming operation.

## I/O COMMAND TRANSLATION

The formatter PWAs serve as a link in the I/O chain by accepting commands sent by the host system, and translating these commands into tape motion and data transfer instructions for the tape drive (see figure 4-23).

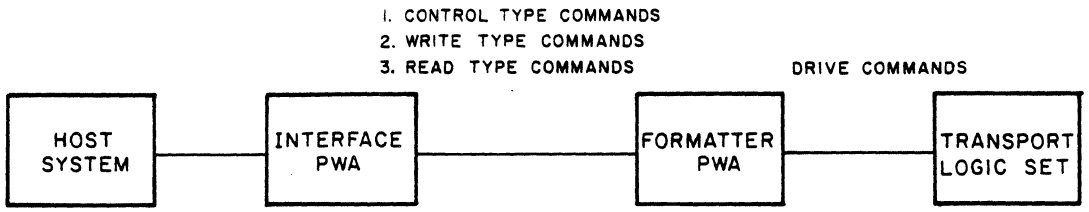


1
CONTROL TYPE COMMANDS

- Sense
- Rewind Tape
- Unload Tape
- Put Drive Online
- Select Low Speed
- Select High Speed
- Select Auto Speed
- Select PE Mode
- Select GCR Mode
- Diagnostic Commands

2
WRITE TYPE COMMANDS

- Write a Record
- Write a Record with Long Gap
- Write a File Mark
- Write a File Mark with Long Gap
- Erase 3 Inches
- Controlled Erase
- Data Security Erase

3
READ TYPE COMMANDS

- Read a Record Forward
- Read a Record Reverse
- Read a File Forward
- Read a File Reverse
- Space a Record
- Backspace a Record
- Controlled Backspace a Record
- Space a File
- Backspace a File

DRIVE COMMANDS

- Write
- Data Security Erase
- Read Forward
- Read Reverse
- Sense Byte n
- Rewind
- Unload
- Online
- Change Speed
- Select PE Mode
- Select GCR Mode
- Select Start/Stop
- Select Start/Stop Mode
- Select Streaming Mode
- Clear Interrupt
- Diagnostic Commands

Figure 4-23. I/O Command Translation

## DATA CONVERSION

The formatter PWAs are responsible for encoding and decoding data to and from PE format and GCR format.

### PE Data Conversion

In PE format, the data block must begin with a preamble and end with a postamble. In the data format sent by the host system, flux transitions in the middle of a cell define the 1's and 0's. A positive pulse (flux transition) indicates a 1; a negative pulse indicates a 0. A cell is the time required to transfer one data bit (see figure 4-24). In order to denote two contiguous 1's or 0's, a phase pulse must occur at the junction of the two cells. A positive phase pulse occurs at the junction when both cells contain 0; a negative phase pulse occurs when both cells contain 1. The absence of a phase pulse at a cell junction indicates that the cells contain opposite values.

### GCR Data Conversion

GCR (Group Coded Recording) is a coding scheme rather than a recording mode. The GCR scheme translates an 8-byte data group, comprising two 4-byte subgroups, into a 10-byte recording group, comprising two 5-byte subgroups. The first data subgroup converted contains 4 data bytes; the second data subgroup converted contains 3 data bytes and an error correcting code (ECC) (see figure 4-25). Note that in the 5-bit GCR conversion of the 4 data bits, there are no more than two contiguous 0's and no more than a single 0 at either end of the 5-bit string (see figure 4-26). This scheme yields a more narrow band-width and better synchronization capability.

After conversion to the GCR code, the data is recorded on tape using the NRZI method. In the NRZI method, a change in the direction of flux indicates a 1 bit (see figure 4-27).

## TAPE CONTROL AND IDENTIFIER MARK GENERATION AND DELETION

For both PE and GCR modes, the formatter PWAs generate the tape control and identifier marks in write operation, and strip off these marks during the read operation. The following paragraphs detail the content and location of these marks.

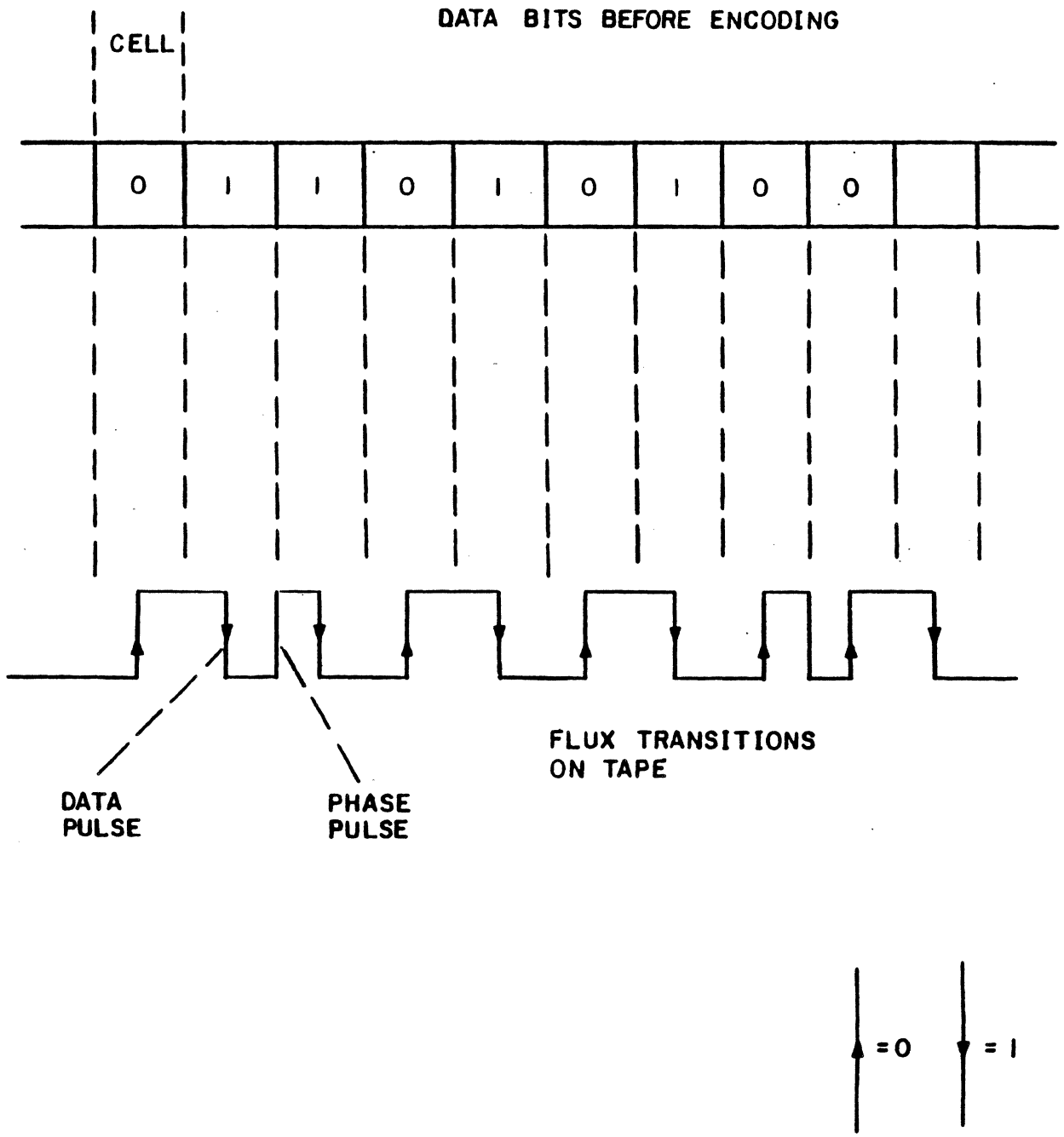


Figure 4-24. Phase Encoding

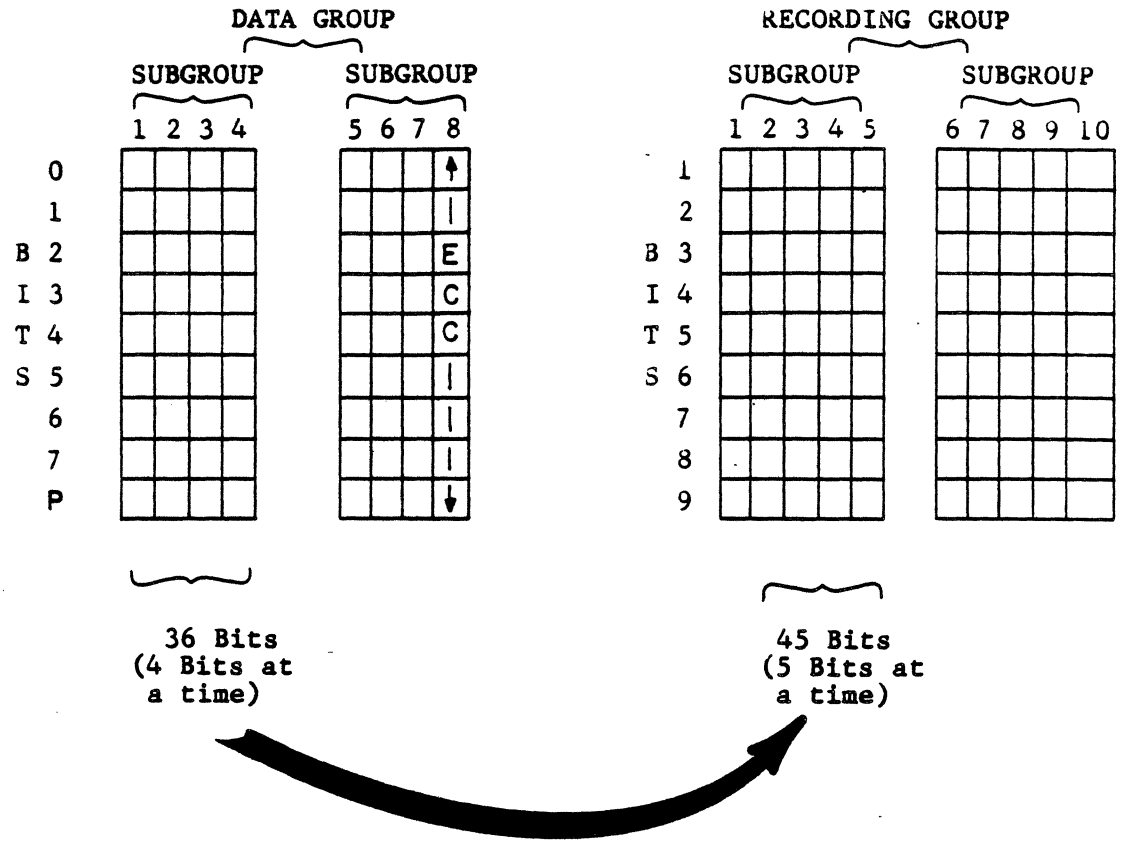


Figure 4-25. GCR Conversion

| 4 Bits Data Value | GCR Value |
|---|---|
| 0 0 0 0 | 1 1 0 0 1 |
| 0 0 0 1 | 1 1 0 1 1 |
| 0 0 1 0 | 1 0 0 1 0 |
| 0 0 1 1 | 1 0 0 1 1 |
| 0 1 0 0 | 1 1 1 0 1 |
| 0 1 0 1 | 1 0 1 0 1 |
| 0 1 1 0 | 1 0 1 1 0 |
| 0 1 1 1 | 1 0 1 1 1 |
| 1 0 0 0 | 1 1 0 1 0 |
| 1 0 0 1 | 0 1 0 0 1 |
| 1 0 1 0 | 0 1 0 1 0 |
| 1 0 1 1 | 0 1 0 1 1 |
| 1 1 0 0 | 1 1 1 1 0 |
| 1 1 0 1 | 0 1 1 0 1 |
| 1 1 1 0 | 0 1 1 1 0 |
| 1 1 1 1 | 0 1 1 1 1 |

Figure 4-26. GCR Translation Values

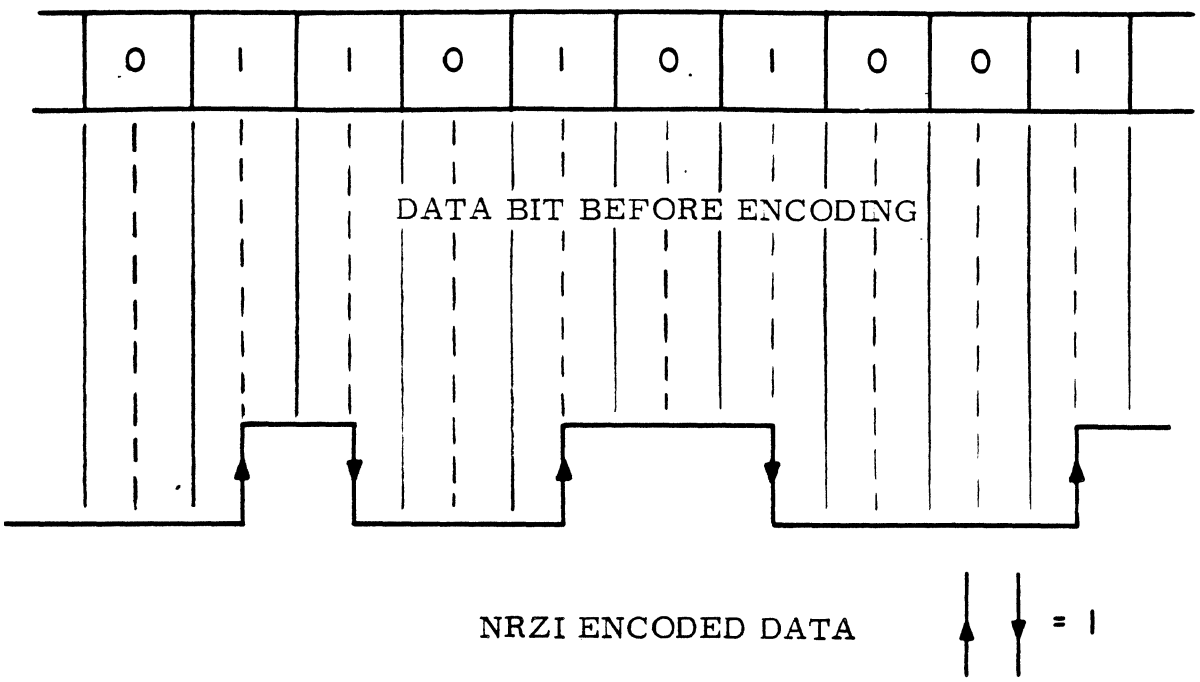


Figure 4-27. NRZI Encoding

PE Data Block Format

The PE tape (see figure 4-28) begins with the PE density identification burst consisting of a series of alternate 1s and 0s in track 4. The inter-block gap, which follows the density identification burst, is nominally 0.6, but may be increased up to 1.2 inches, depending on data availability.

The PE data block begins with a preamble (40 tracks with all 0s followed by 1 track of all 1s) and ends with a postamble (1 track of all 1s followed by 40 track of all 0s).

GCR Data Block Format

The GCR data format requires not only preamble and postamble patterns, but also data conversion into groups, for each of which an error correcting code (ECC) clearance is generated. Also, cyclic redundancy checks (CRCs) and auxiliary cyclic redundancy checks (ACRCs) are added to the data to facilitate detection and correction of errors. Resynchronizing bursts are added for transfers over 1106 bytes to enable the read detection logic to resynchronize (see figure 4-29).

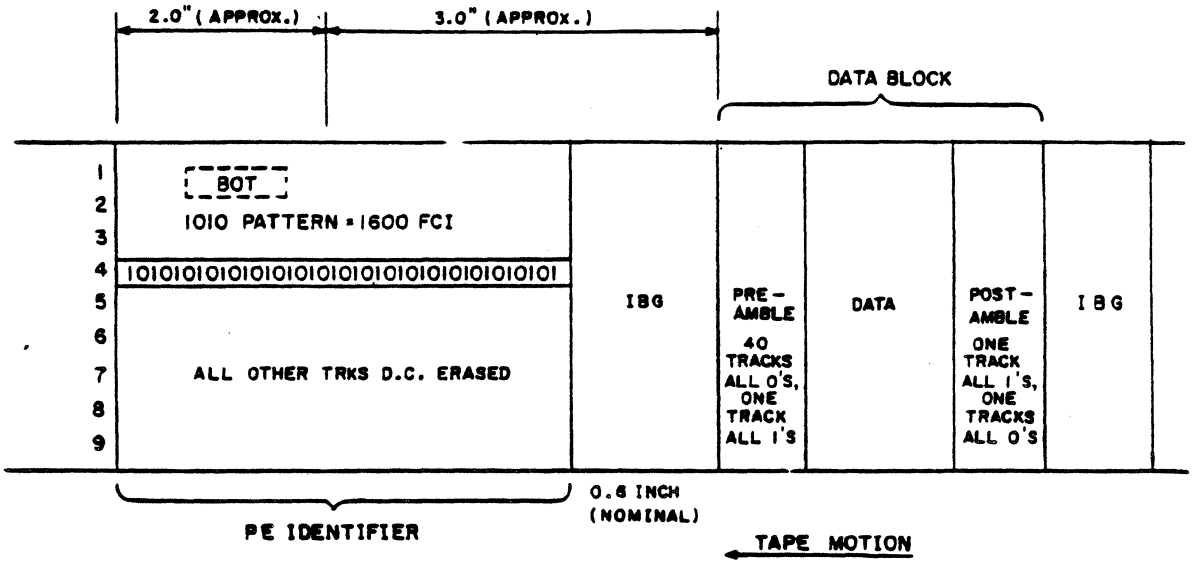


Figure 4-28. PE Format

The components of the GCR tape format are described below in the sequence in which they are written on the tape.

- Density Identification

  A burst in the PE frequency range on track 6. All other tracks are erased.

- Interblock Gap (IBG)

  A dc erased section of tape separating blocks of information. Nominally 0.3 inch; may be varied up to 0.6 inch.

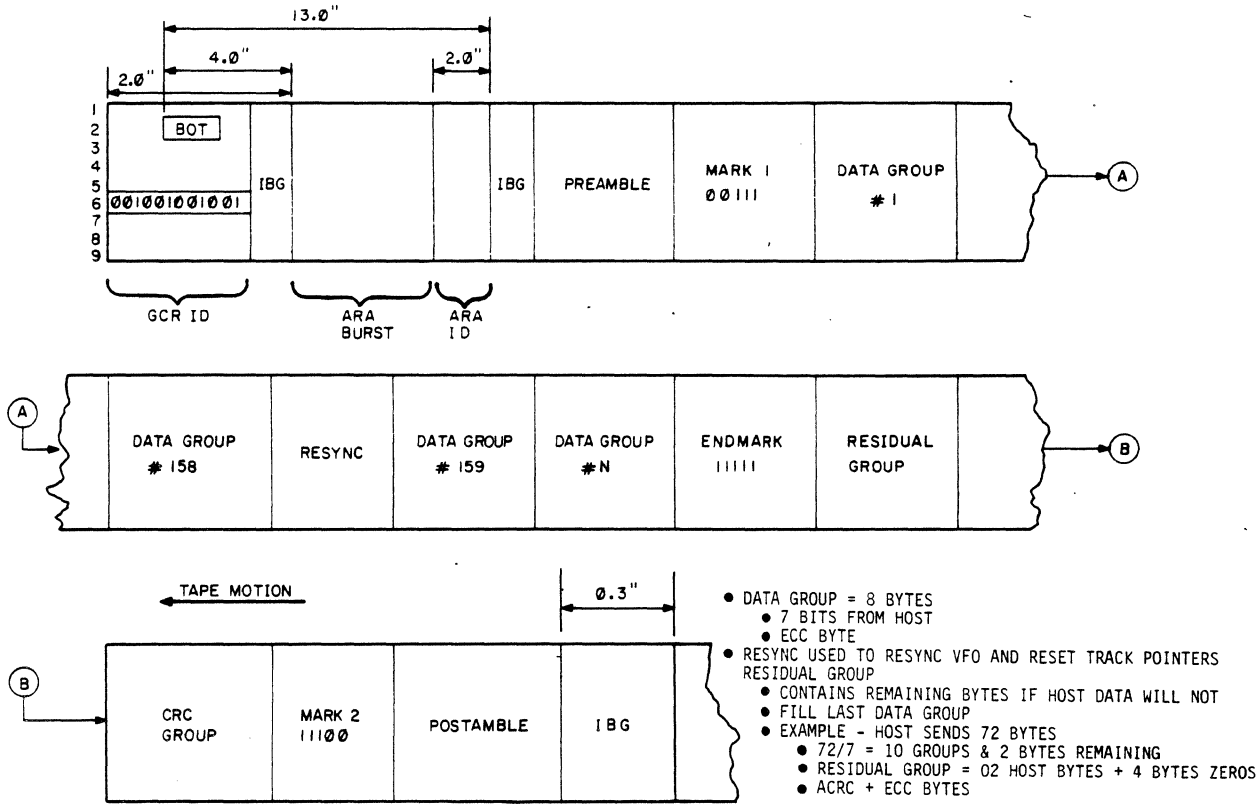


Figure 4-29. GCR Tape Format

- ARA (Automatic Read Amplifier) Burst

  A string of all 1's in all tracks placed on the tape for the purpose of setting up the read amplifiers.

- ARA ID (Automatic Read Amplifier Identification)

  A special control at the send of the ARA. When reading backwards, the ARA ID denotes the appearance of the ARA burst.

- PREAMBLE (see figure 4-30A)

  A group of signals recorded at the beginning of a block for circuit synchronization. The preamble contains 16 subgroups, the first of which is the terminator (TERM) control subgroup. The terminator subgroup is the first (and last) subgroup of a record. The next subgroup is the secondary (SEC) control subgroup which is the second (and next to last) subgroup of a record. Next, 14 synchronization subgroups are written which complete the preamble.

- MARK 1

  A control signal which separates control subgroups from data. When the tape is moving forward, it denotes the beginning of data.

- Data Group

  From 1 to 158 data groups may be written. Each data group comprises 2 subgroups. The first contains 4 data bytes. The second subgroup contains 3 data bytes and 1 error correcting code (ECC) byte. Note that the tape format is shown before the 4/5 conversion takes place.

- RESYNC (See figure 4-30B)

  The RESYNC burst is written following the 158th data group in order to resynchronize the circuits and to clear dead-track and phase error pointers. The first element of the RESYNC burst is MARK 2, a signal which separates data from control subgroups. Next, two sync subgroups are written, followed by MARK 1, to separate the control signals from the data. After RESYNC, another series of data groups may be written.

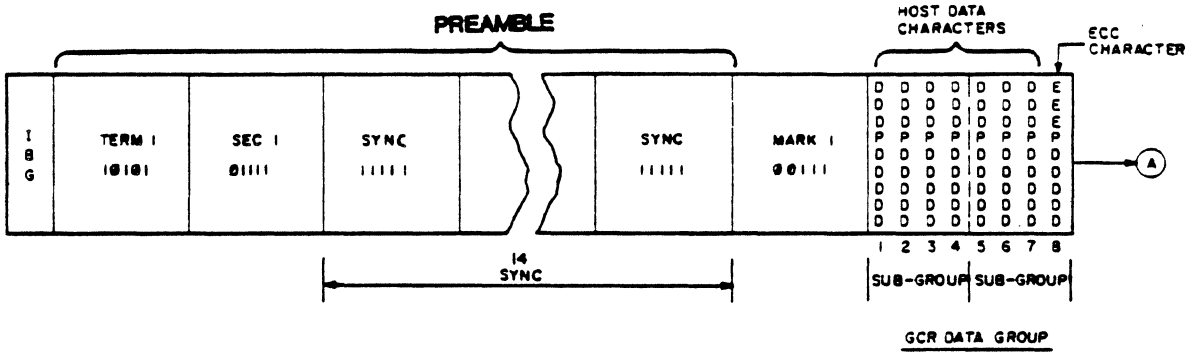


Figure 4-30A. Detail of GCR Tape Format

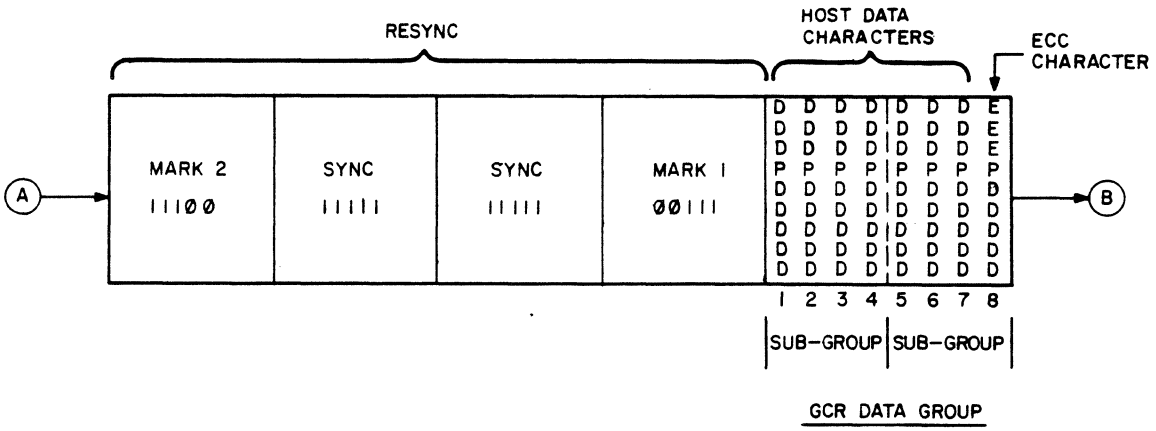


Figure 4-30B. Detail of GCR Tape Format

- END MARK (see figure 4-30C)

  A control signal separating the last full data group from the residual group.

- Residual Group (see figure 4-30C)

  Contains the remaining data characters from the host, and pad characters if needed, to fill the first six positions in the group. The 7th character is the auxiliary cyclic redundancy check (ACRC); the 8th character is the error correcting code (ECC) character.

- Cyclic Redundancy Check (CRC) Group (see figure 4-30C)

  The first character is either a pad character or the CRC character. Positions 2 through 6 are occupied by the CRC character. The 7th position is occupied by the residual character and the 8th position is occupied by the ECC character.

- MARK 2 (see figure 4-30C)

  A control signal separating data from control subgroups. When tape is moving forward, it marks the beginning of other control signals.

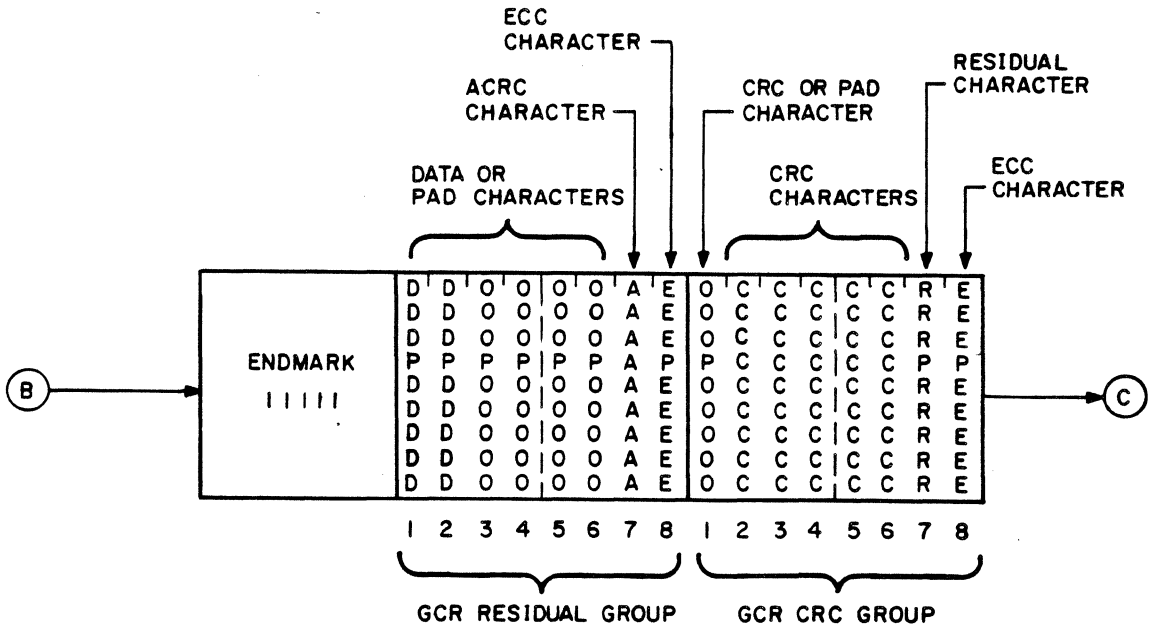


Figure 4-30C. Detail of GCR Tape Format

o POSTAMBLE (see figure 4-30D)

A group of control signals at the end of the data block. There are 16 subgroups, the first 14 of which are synchronizing subgroups for the electronic synchronization of the circuits. The next to last subgroup is the secondary (SEC) control subgroup and the last is the terminator (TERM) control subgroup.

Under control of the formatter logic, the preamble, postamble and resynchronizing codes are generated in the correct sequence, and the data is manipulated to produce a correctly coded data block. After the preamble is generated, data from the interface PWA is clocked through the formatter input circuitry to the 4/5 converter where 4 bytes are converted to 5 bytes. After every seventh byte, an ECC character is generated by the logic from the incoming data and sent to the 4/5 converter. At the end of data transfer, with the LAST WORD signal from the interface PWA, padding characters of zero value are added to the final group to make a complete group. Cyclic redundancy check (CRC) and auxiliary cyclic check (ACRC) characters are generated from the incoming data and inserted in the data block in the appropriate locations. At the termination of data transfer, a postamble is generated and placed at the end of the data block (see figures 4-30A, 4-30B, 4-30C, and 4-30D).

During a read operation, the control and error detection codes are removed in the formatter PWAs before the data is transferred to the host.

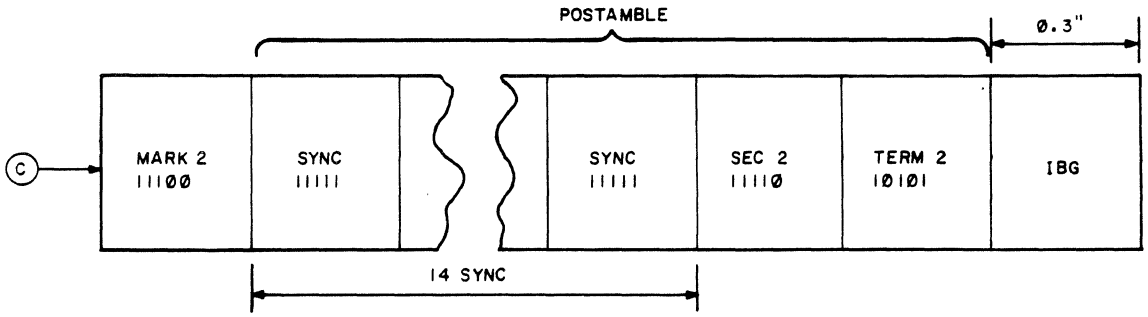


Figure 4-30D. Detail of GCR Tape Format

## ERROR DETECTION AND CORRECTION

When operating in PE mode, single track, "on-the-fly" parity error detection and correction is performed. In GCR mode, single and 2-track, "on-the-fly" error detection and correction are performed by means of cyclic codes.

The read detection circuit performs best when the incoming signal level from the track is between 300 mV and 900 mV; the optimum level is 500 mV. When the signal level drops below a specified value, a warning latch is set for that track to denote the presence of a marginal signal. The latch remains set until resynchronization or the end of the data block. Setting the latch is called "dead tracking".

In PE mode, when a parity error is found in a byte, the warning latches for all 9 tracks are checked to see if any track is "dead tracked". If a track is, it is assumed that the bit in the dead track is in error, and that bit is reversed before the byte is sent to the interface PWA.

For proper data detection in PE mode, the flux reversal denoting a bit should occur approximately in the middle of the bit cell. If the flux reversal takes place outside a window of $\pm$ 25% of center (see figure 4-31), a phase error signal is generated to indicate that the data detected on that track may be in error. In GCR mode, the limit of the window in a write operation is $\pm$ 37.5% of center; in the read operation, the window limit is $\mp$ 43.75% of center (see figure 4-32). The phase error indication lasts only as long as the time required for the bit cell to traverse the read head. the data correction is similar to that described in dead tracking - when a parity error is found, the phase error field is scanned to see if a track is reported in error; if so, the bit in that track is reversed.

The limitations to the PE methods are that, if more than 1 track is dead tracked, or if a dead track error and phase error occur in the same byte, an unresolved bit error conditon exists. Also, parity checking does not detect an error if both bits are wrong. Or, if only one bit is wrong, there is no way to determine which of the two tracks is in error.

The lack of perfect perpendicularity between the tape track and the read/write heads is known as "skew". This condition causes the bits comprising a byte to be read at slightly different times.

Skew compensation is implemented by transferring read data from the tape over nine separate detection circuits (one for each track). The detected bits are gated independently into a skew buffer. When the skew buffer has received all of the bits in the byte, the byte is gated out as a unit.

In GCR mode, three check characters based on cyclic codes are used in error detection and reporting. These check characters are:

- o Error and Correcting Code (ECC) Character
- o Cyclic Redundancy Check Character (CRC)
- o Auxiliary Cyclic Redundancy Check Character (AUX CRC)

The ECC character, which contains 8 bits, is generated as the 8th byte of a data group (see figure 4-30). By means of the ECC character, single track errors can be detected and corrected "on-the-fly" without the need of track pointers. The ECC character also detects double track errors, but requires the aid of dead track pointers and phase error pointers to correct the errors. These pointers use the same methods to identify the tracks as in PE error detection.

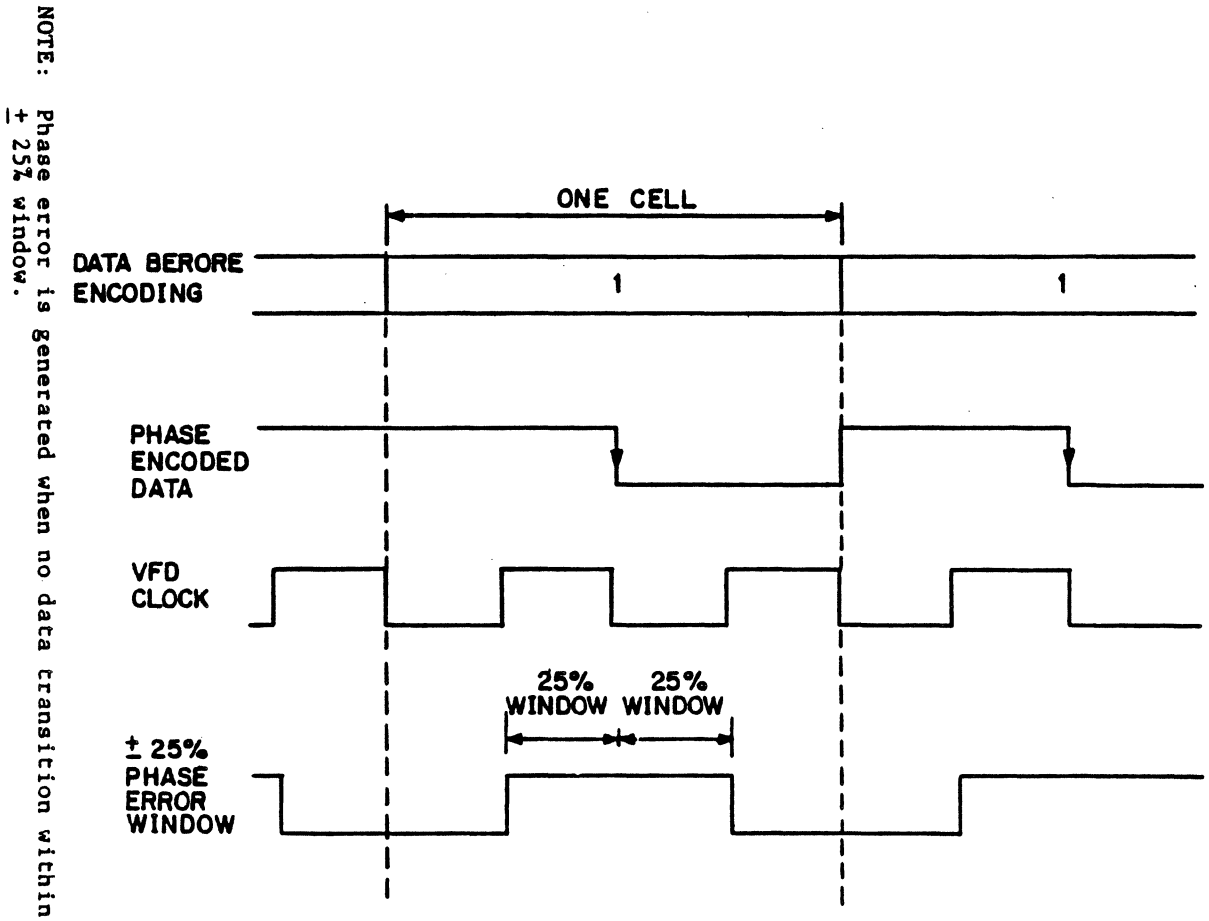


Figure 4-31. Phase Error Window - PE Mode

The CRC character and AUX CRC character are generated from the data structure and written into it so that the validity of the data can be checked after it is read. These characters indicate only the occurrence of one or more errors; they do not identify the location of the error(s), nor are the error(s) corrected. However, the host system is informed of the error occurrence so that the host can initiate its retry procedure.

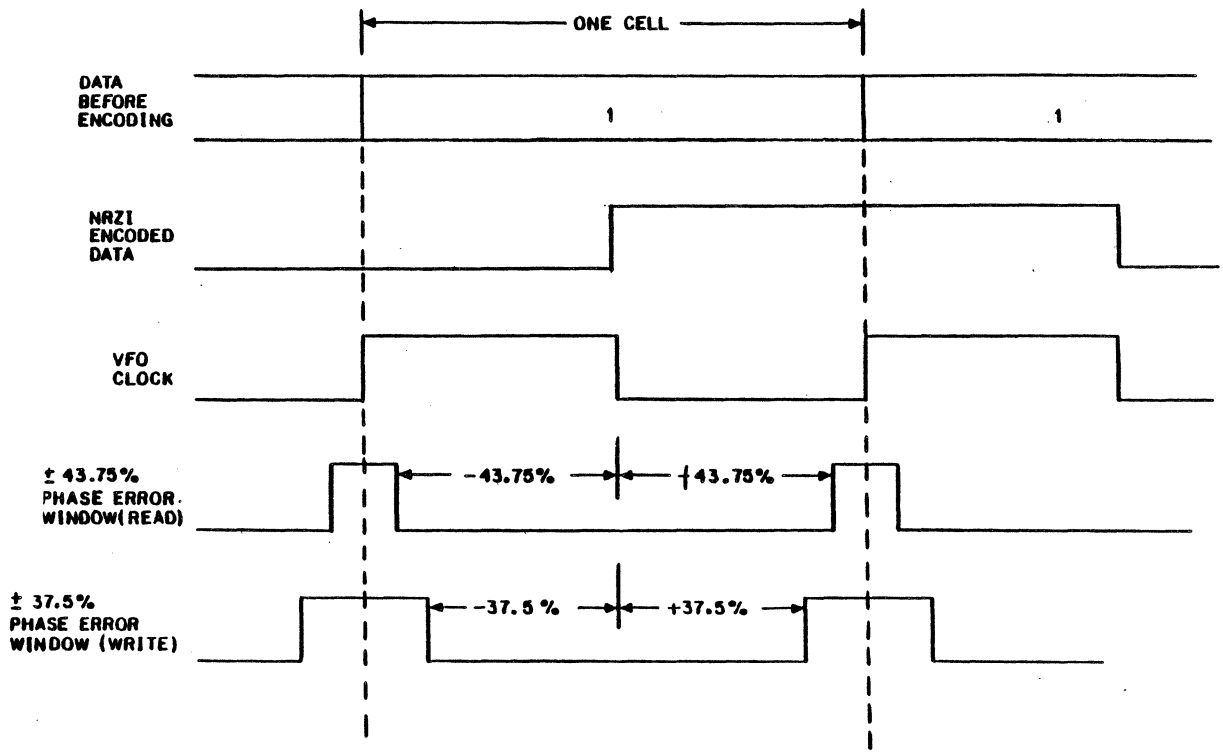


Figure 4-32. Phase Error Window - GCR Mode

## INTERFACE PWA

Detailed descriptions of the interface PWAs for the STU are contained in the following manuals:

| Pub. No. | Title |
|---|---|
| 49763010 | Supplemental Hardware Maintenance Manual, OEM Interface |
| 49763020 | Supplemental Hardware Maintenance Manual, Buffered Pertec Interface |
| 49763025 | Supplemental Hardware Maintenance Manual, Buffered Pertec Enhanced Interface |
| 49763045 | Supplemental Hardware Maintenance Manual, Buffered STC Enhanced Interface |
| 49763050 | Supplemental Hardware Maintenance Manual, Small Computer Interface System |

Switch and jumper settings for the above interfaces are contained in Appendices A thru E in the Hardware Maintenance Manual, Publication No. 49762900.

## SYSTEM AND TIMING CONSIDERATIONS

### MOTION CHARACTERISTICS

The STU has two operating speeds: 25 ips and 75 ips. Selection of either speed is made at the STU interface, with 25 ips being the default speed. Following a rewind operation, the STU automatically reverts to 25 ips.

In the following discussions, read operations represent all read-type operations such as READ, SPACE, and SEARCH. Similarly, write operations represent all write-type operations such as WRITE DATA, ERASE, and WRITE FILE MARK.

START/STOP MODE

In the start/stop mode, STU operation is similar to that of a conventional 1/2 inch tape unit. It accelerates the tape when a command is received, and stops the tape within the IBG. A long IBG of 1.2 inch nominal in PE or 0.6 inch in GCR may be commanded as well as the normal or 0.7 inch nominal IBG in PE or 0.4 inch in GCR.

## Read Operations

After a block has been successfully traversed, the tape is brought to a complete stop to await the next command.

NOTE

In start/stop mode, tape is stopped between records regardless of reinstruct timing.

## Write Operations

Tape control is the same as described above for the read operation. The nominal IBG written in this mode is 0.7 inch in PE and 0.4 inch in GCR.

## Other Start/Stop Motion Characteristics

Whenever a change from read to write mode is experienced (forward direction), a "jog" operation is performed in order to position the erase within the IBG. When changing from WRITE to READ REVERSE or REWIND, a forward jog to erase a full gap is inserted by the transport. This insures that there will be no glitch in the initial gap when the write head is turned off.

STREAMING MODES (25 ips and 75 ips)

The streaming modes are high performance operating modes designed to accommodate transfers of many contiguous data blocks to or from tape. Unlike the start/stop mode, tape acceleration and deceleration cannot be accomplished within the interblock gap (IBG). In order to efficiently utilize the streaming mode, tape motion must be sustained by commanding successive data operations. This is accomplished by issuing subsequent commands to the STU during the time the STU is traversing the IBG. This command window is referred to as the command reinstruction time internal. Should a follow-up command not be received during the reinstruction interval, a repositioning cycle is required. (A REVERSE command can be received during the initial down ramp and reverse ramp up, and will be executed without going through the complete repositioning cycle.) By way of illustration, consider this 75 ips case: Assume that the STU is in PE mode and has just completed a write data operation; if the normal IBG length of 0.6 inch is commanded by the system, then the system has 6.0 ms to respond with a subsequent WRITE command in order for streaming mode to be sustained. If the subsequent WRITE command is not received by the end of the reinstruction interval, the STU will reposition itself in anticipation of the next streaming mode command.

The following three sequences of events generally describe the motion characteristics of the STU in the streaming mode:

- Case 1 - Command received during reinstruction interval
- Case 2 - command received during repositioning cycle
- Case 3 - Command received following repositioning cycle

These three sequences are applicable to both forward and reverse operations and are described on the following pages individually. First, a more general discussion of streaming mode motion characteristics is presented.

(See Figure 4-33) In order for the STU to perform a data operation on Block N + 1 from a stopped position (point E), it must first accelerate and be up to speed at point F as referenced to the read head in the case of a read-type operation, or erase head in the case of a write-type operation. For the case where the STU has just completed a data operation on Block N and a repositioning cycle is required, the STU begins the repositioning cycle at point B and traverses path BCDE. The STU then positions itself at point E in anticipation of the next operation. The STU presumes the next operation to be a streaming mode operation on Block N + 1. A sequence chart is presented in table 4-1 which identifies STU streaming mode motion sequences for combinations of previous and present command issuances. In all cases, the next command is received during the reinstruct time.

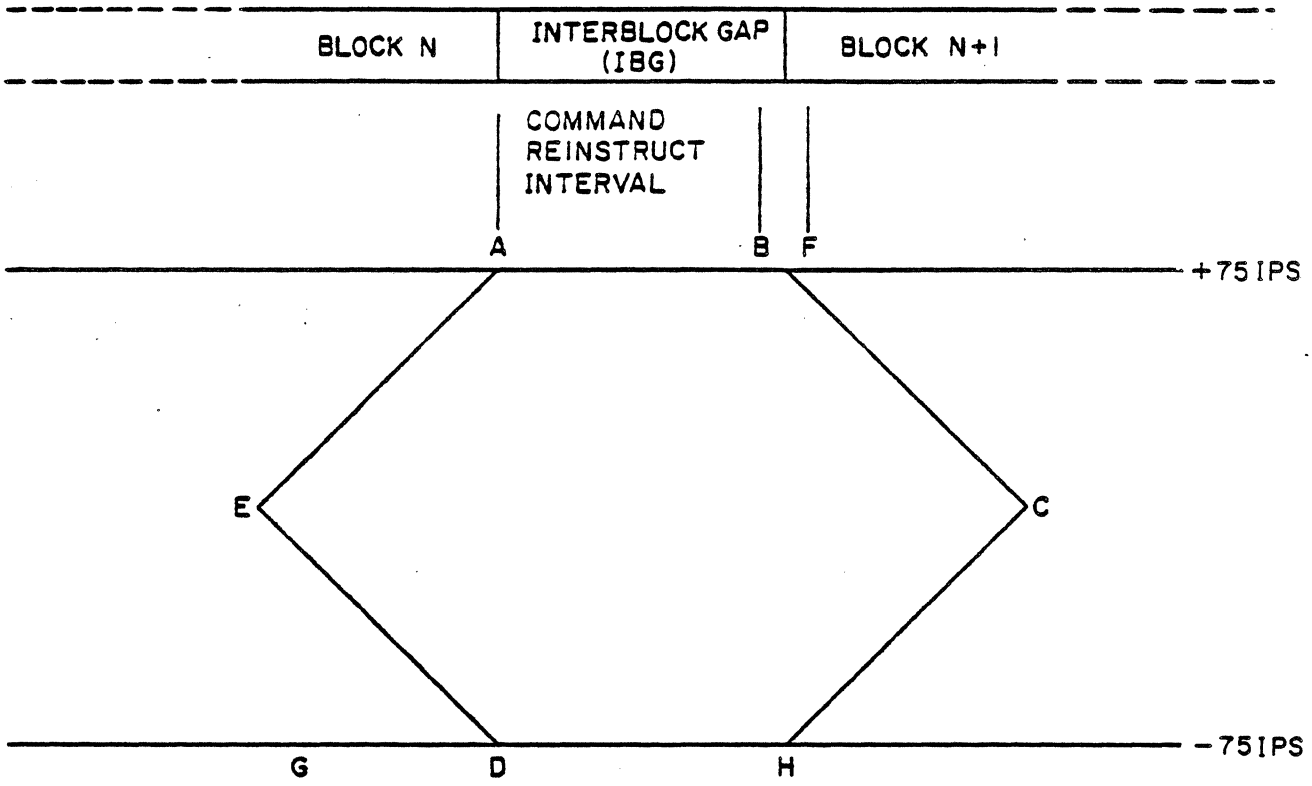


Figure 4-33. Streaming Mode Velocity Diagram

Table 4-1. STREAMING MODE MOTION SEQUENCE CHART

| PREVIOUS COMMAND | NEXT COMMAND | | |
|---|---|---|---|
| | FORWARD READ-TYPE | REVERSE READ-TYPE | WRITE-TYPE |
| Forward Read-Type | Path ABF | Paths ABC, CHDG | Path ABCDEF |
| Reverse Read-Type | Paths HDE, EABF | Path HDG | Paths HDE, EABF |
| Write-Type | Not Recommended | Paths ABC, CHDG | Path ABF |

Case 1 (Non-Stop)

Command Received During Reinstruction Interval - A command is received sometime during the command reinstruct period following the data operation on Block N. Note that the velocity profile at the bottom of figure 4-34 indicates that full velocity is maintained without interruption through the processing of Block N and N + 1 (refer to figure 4-34).

Case 2 (Momentary Stop)

Command Received During Repositioning Cycle - A command is not received during the Command Reinstruct period, but rather is received during the Repositioning Cycle. The diagram illustrates, in the distance domain, the sequence of events with respect to the STU motion and the command transfer (refer to figure 4-36).

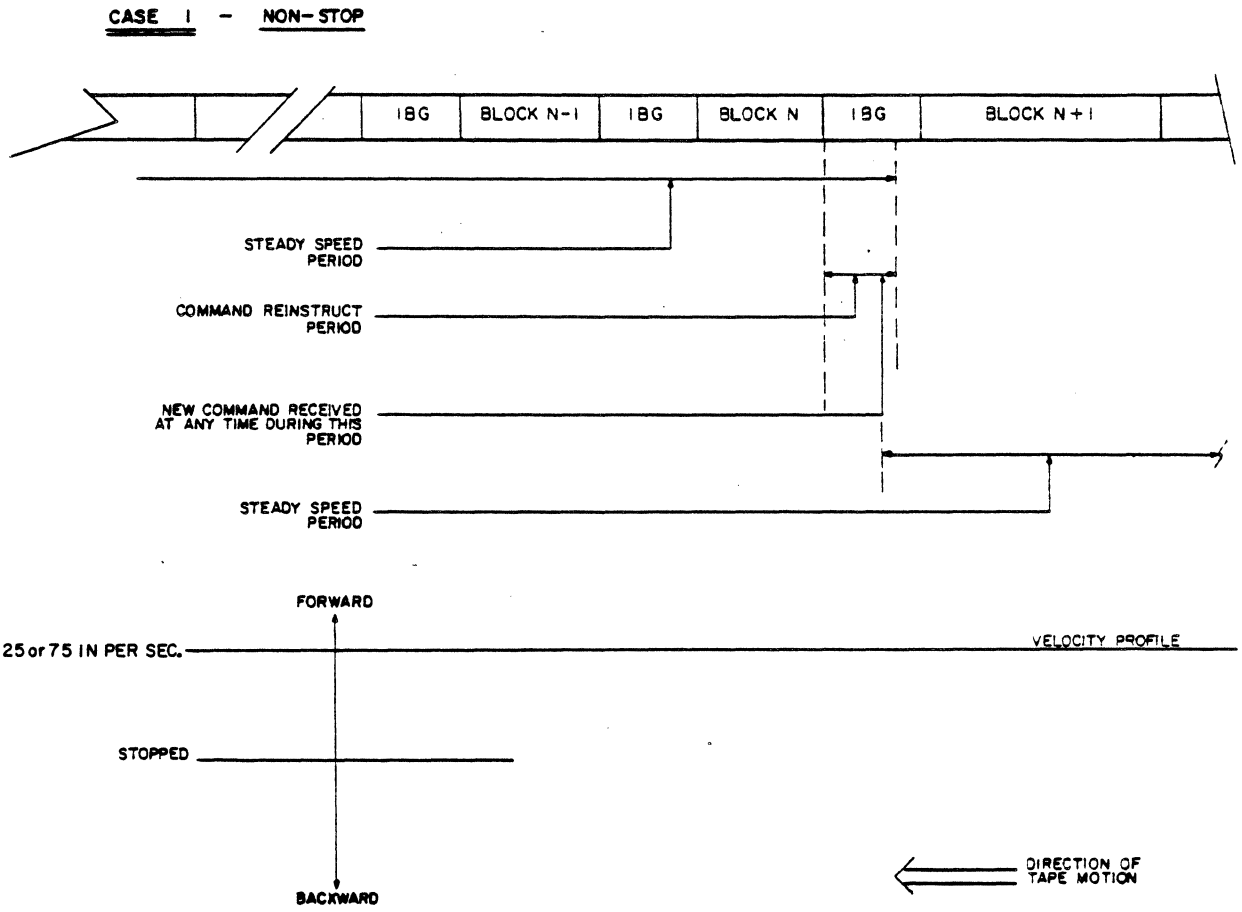


Figure 4-34. Case 1 - Tape Motion Control

The velocity profile illustrates, in the time domain, tape velocity characteristics. Looking at figure 4-36, it can be seen that the tape stops only momentarily to change direction. The velocity profile identifies the time sequence of events. The correspondence between the time and distance portrayals in sequence is as follows:

| EVENT | Velocity Profile Position |
|---|---|
| Steady Speed Period | Up to Point A |
| Forward Motion Deceleration | A-B |
| Tape Motion Stopped Momentarily | B |
| Reverse Motion Acceleration | B-C |
| Full Speed Reverse Motion | C-D |
| Reverse Motion Deceleration | D-E |
| Tape Motion Stopped Momentarily | E |
| Forward Motion Acceleration | E-F |
| Steady Speed Forward Through Data Block N + 1 | Point F and On |

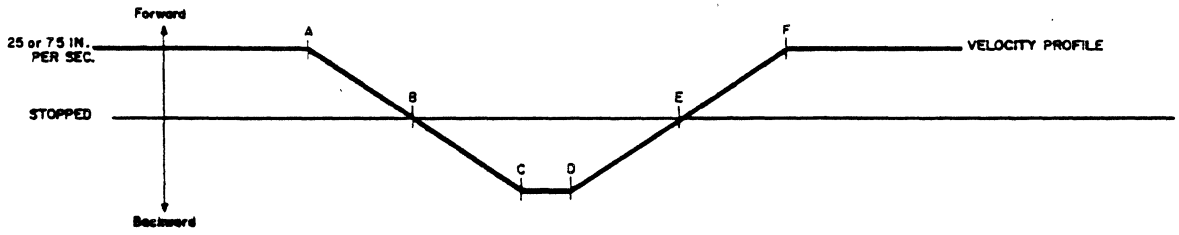


Figure 4-35. Case 2 - Velocity Profile

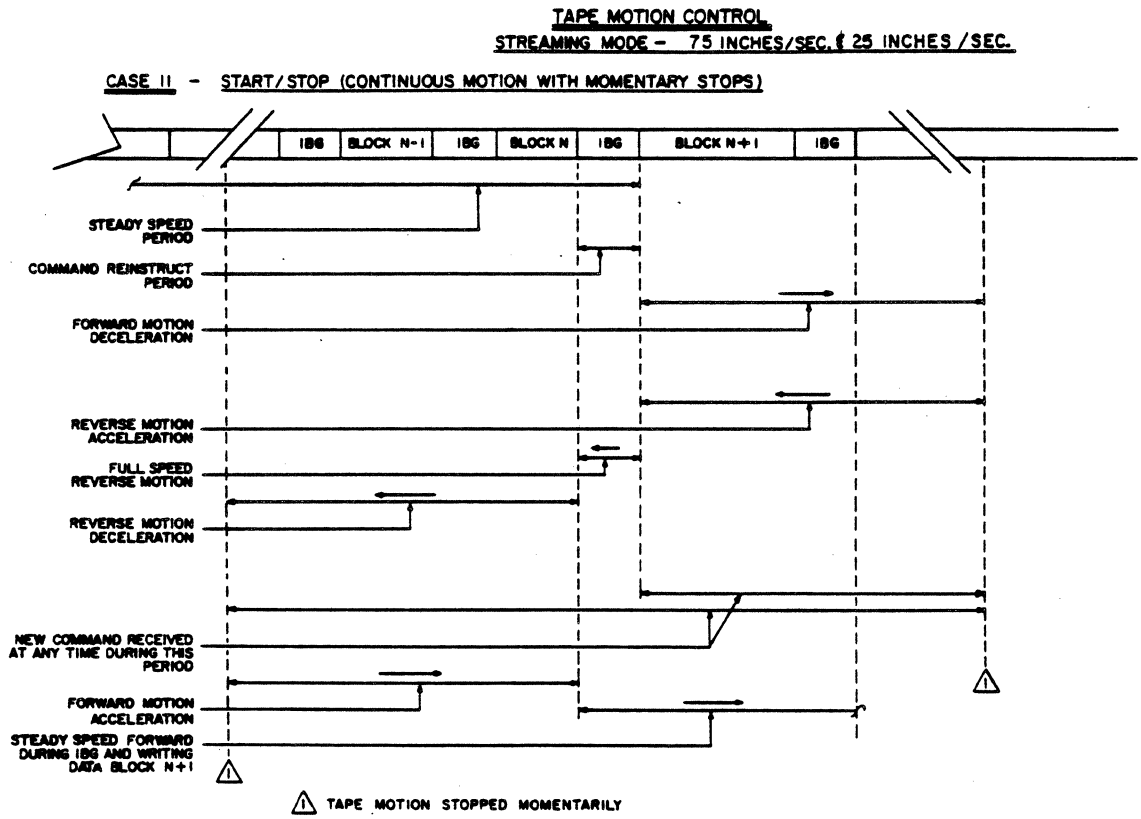


Figure 4-36. Case 2 - Tape Motion Control

Case 3 (Wait For Command)

Command Received Following Repositioning Cycle - This case is very similar to case 2 except that the subsequent command is not received until the tape has come to rest at point E1. The tape is then not accelerated until time E2 when the new command is received. Other than for this delay in receiving the next command, the correspondence between the time and distance domain portrayals is the same for cases 2 and 3 (refer to figure 4-38).

| EVENT | Velocity Profile Position |
|---|---|
| Steady Speed Period | Up to Point A |
| Forward Motion Deceleration | A-B |
| Tape Motion Stopped Momentarily | B |
| Reverse Motion Acceleration | B-C |
| Full Speed Reverse Motion | C-D |
| Reverse Motion Deceleration | D-E1 |
| Tape Motion Stopped While Awaiting New Command | E1-E2 |
| Forward Motion Acceleration | E2-F |
| Steady Speed Forward Through Data Block N + 1 | Point F and On |

Important to note is that the STU performs all repositioning without system or controller intervention.

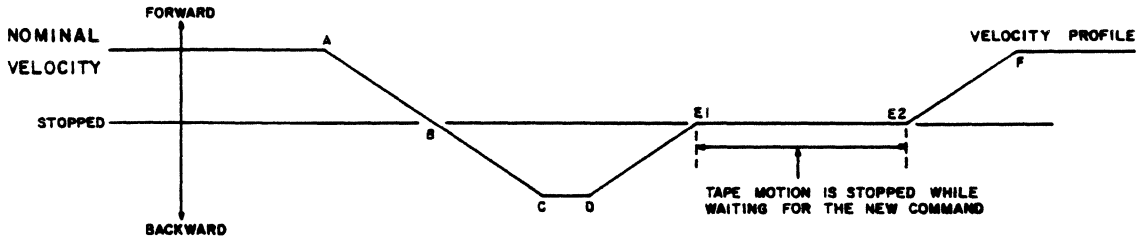


Figure 4-37. Case 3 - Velocity Profile

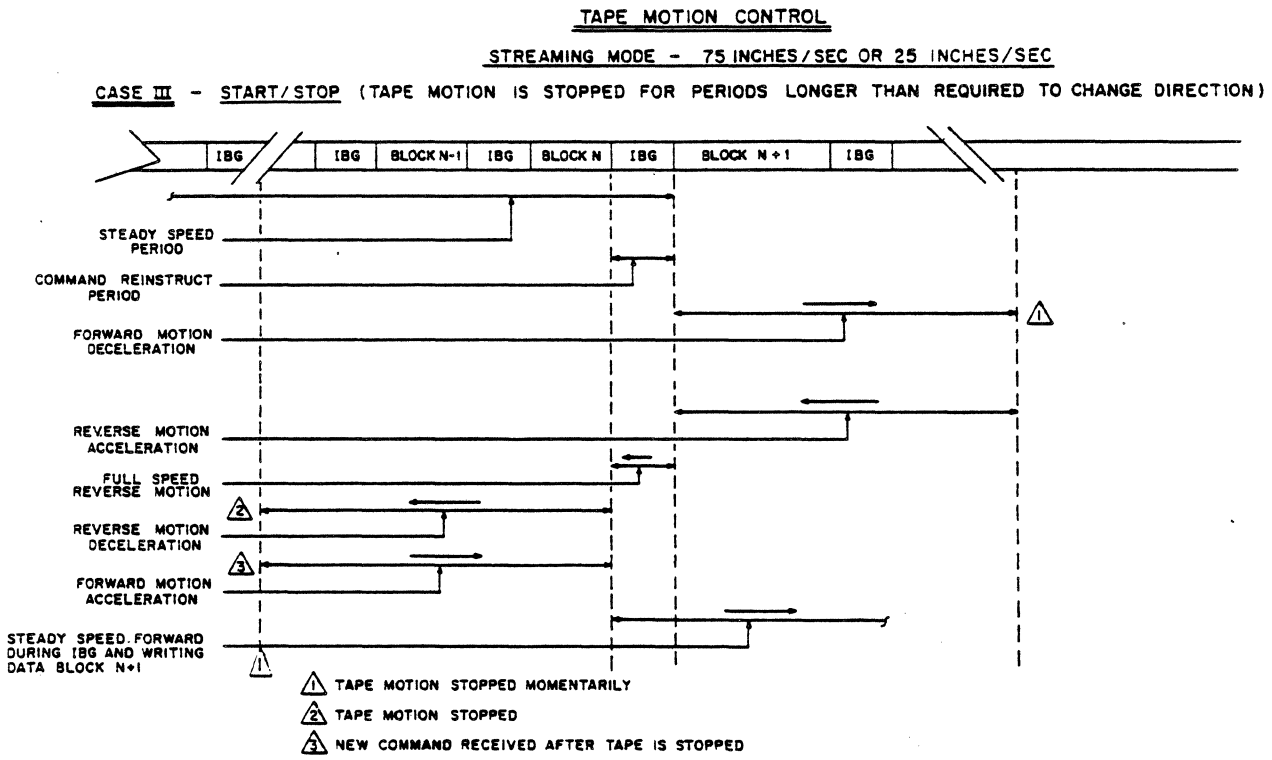


Figure 4-38. Case 3 - Tape Motion Control

## 25 IPS MODE CONTROL

The STU automatically switches between 25 ips streaming mode and 25 ips start/stop mode in response to system usage. Essentially, when repositioning becomes excessive in streaming mode, rather than continue to 'thrash', the STU will switch to start/stop mode.

The STU will switch back to streaming mode when the command Reinstruct Time consistently reduces to a value that would allow streaming.

NOTE

To avoid 'jog' delays, mode switching is done at 25 ips rather than when stationary. In essence, a mode switch takes effect at the end of the block in process.

## ADAPTIVE VELOCITY CONTROL

With this feature selected, rather than selecting 25 ips mode when low speed is commanded, the STU enters a mode in which the optimum speed is chosen to match system requirements. If 75 ips mode gives the best throughput, then this mode is used; the same applies to 25 ips streaming and 25 ips start/stop. This choice of operating mode is made automatically by the STU and does not require any involvement by the system. This feature allows the STU to be interfaced to a standard adapter and to run under standard 1/2 inch tape software, and yet offer the advantage of streaming.

# DIAGRAMS 5

## GENERAL

This section of the manual contains the schematics and logic diagrams for the PWA's contained in the transport. A complete list of boards is shown in the table below and is arranged in sets numerically by the 8-digit control number. Do not attempt to order new PWA's by the 8-digit drawing number on these drawings; instead, use Section 7, Parts Identification, of the manual to order the appropriate replacement assembly.

Preceding the schematics is the main electrical cable diagram. This diagram shows all cables and their respective connectors routed to the various transport assemblies.

Table 5-1. SCHEMATIC INDEX

| TITLE | SCHEMATIC |
|---|---|
| Cable Diagram | 77019840 |
| Control Panel | 77005910 |
| Formatter Read | 77027960 |
| Power Driver | 77041190 |
| Write Driver | 77041210 |
| Read Amplifier | 77041220 |
| Formatter Write | 77026110 |
| Power Supply Control | 77041280 |
| Power Supply | 77041310 |
| Servo-Control | 77026090 |

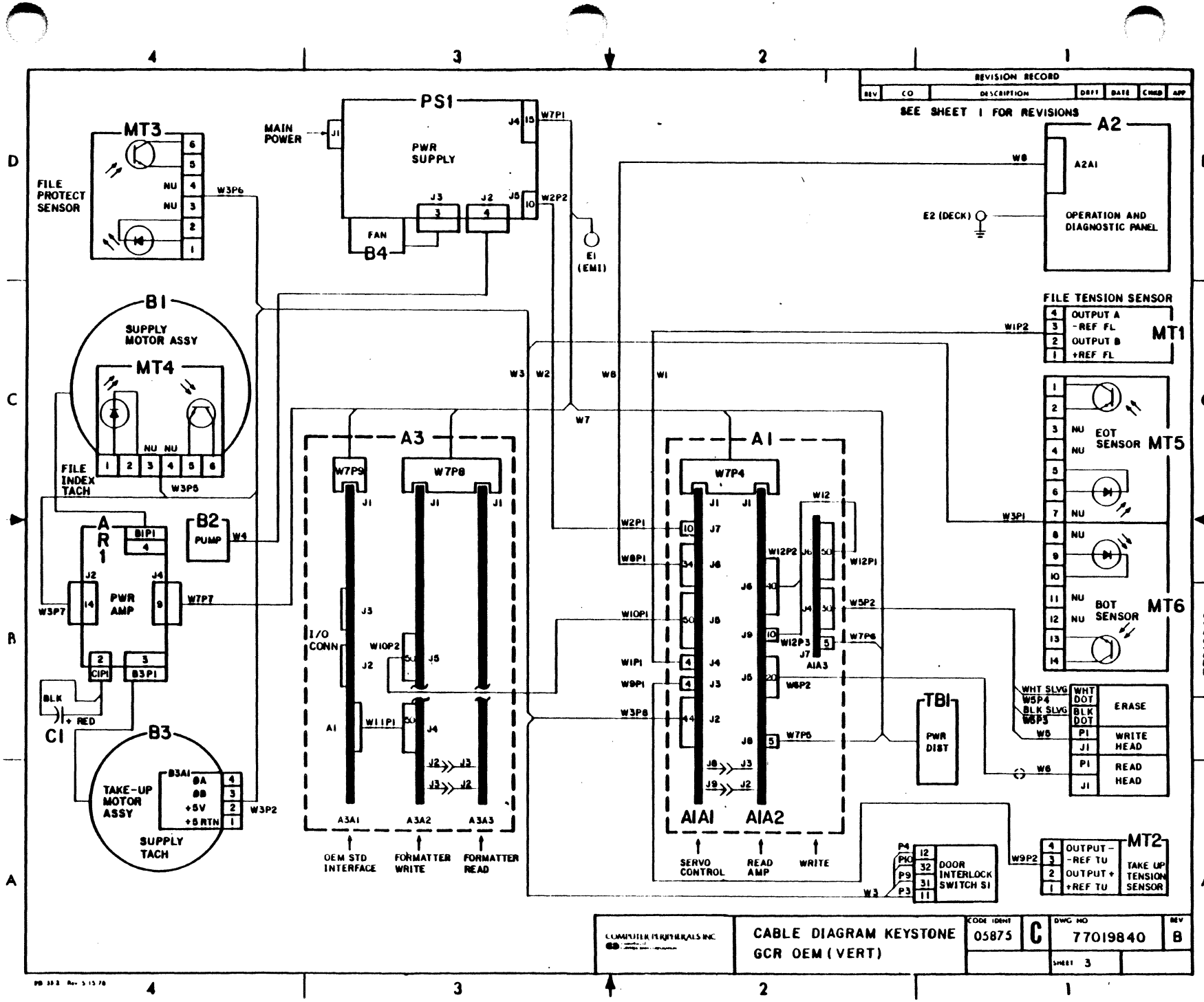
REVISION RECORD
REV
CO
DESCRIPTION
DRFT
DATE
CHKD
APP
SEE SHEET 1 FOR REVISIONS
MT3
FILE PROTECT SENSOR
NU
W3P6
PS1
MAIN POWER
J1
PWR SUPPLY
J4
15
W7P1
J3
J2
J5
10
W2P2
FAN
B4
E1 (EMI)
A2
W8
A2A1
E2 (DECK)
OPERATION AND DIAGNOSTIC PANEL
B1
SUPPLY MOTOR ASSY
MT4
NU NU
1 2 3 4 5 6
FILE INDEX TACH
W3P5
FILE TENSION SENSOR
4 OUTPUT A
3 -REF FL
2 OUTPUT B
1 +REF FL
MT1
W1P2
W3 W2 W8 W1
W7
A3
W7P9
W7P8
J1
I/O CONN
J3
J2
W10P2
W11P1
A1
A3A1
A3A2
A3A3
OEM STD INTERFACE
FORMATTER WRITE
FORMATTER READ
A1
W7P4
W12
W12P2
W12P3
W12P1
AIA3
AIA1
AIA2
SERVO CONTROL
READ AMP
WRITE
W2P1
W8P1
W10P1
W1P1
W9P1
W3P8
W5P2
W7P6
W9P2
A R 1
B1P1
B2
PUMP
W4
PWR AMP
W3P7
W7P7
C1P1
B3P1
BLK
+ RED
C1
B3
TAKE-UP MOTOR ASSY
B3A1
@A
@B
+5V
+5 RTN
W3P2
SUPPLY TACH
TB1
PWR DIST
P4
P10
P9
P3
12
32
31
11
DOOR INTERLOCK SWITCH S1
W3
1 2 3 NU 4 NU 5 6 7 NU 8 NU 9 10 11 NU 12 NU 13 14
EOT SENSOR
BOT SENSOR
MT5
MT6
WHT SLVG W5P4
BLK SLVG W5P3
W8
WHT DOT
BLK DOT
P1
J1
ERASE
WRITE HEAD
READ HEAD
MT2
W9P2
4 OUTPUT -
3 -REF TU
2 OUTPUT +
1 +REF TU
TAKE UP TENSION SENSOR
COMPUTER PERIPHERALS INC
CABLE DIAGRAM KEYSTONE
GCR OEM (VERT)
CODE IDENT
05875
C
DWG NO
77019840
REV
B
SHEET 3
77019840

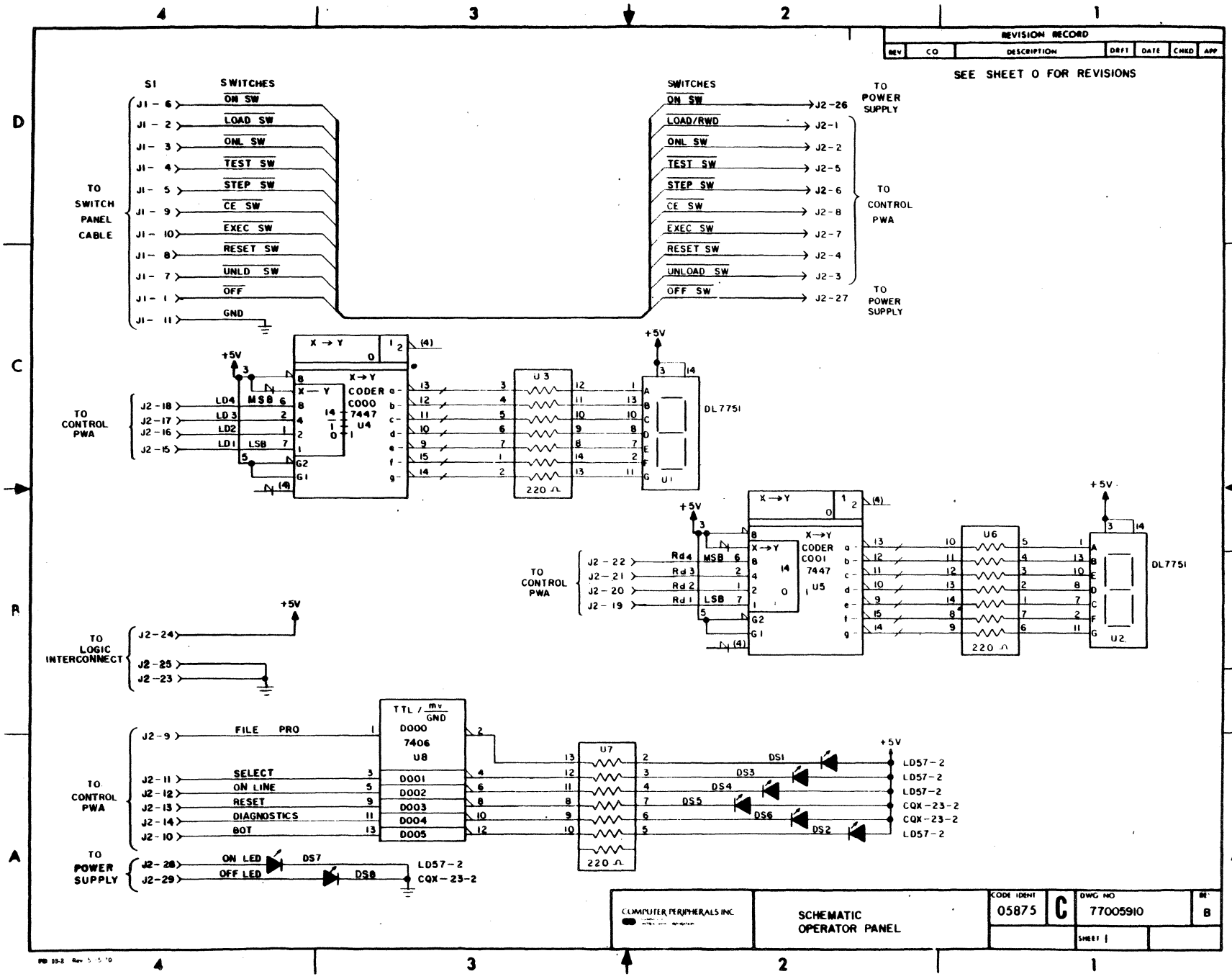
REVISION RECORD
REV
CO
DESCRIPTION
DRFT
DATE
CHKD
APP
SEE SHEET 0 FOR REVISIONS
S1
SWITCHES
TO SWITCH PANEL CABLE
J1 - 6
ON SW
J1 - 2
LOAD SW
J1 - 3
ONL SW
J1 - 4
TEST SW
J1 - 5
STEP SW
J1 - 9
CE SW
J1 - 10
EXEC SW
J1 - 8
RESET SW
J1 - 7
UNLD SW
J1 - 1
OFF
J1 - 11
GND
SWITCHES
ON SW
J2-26
TO POWER SUPPLY
LOAD/RWD
J2-1
ONL SW
J2-2
TEST SW
J2-5
STEP SW
J2-6
CE SW
J2-8
EXEC SW
J2-7
RESET SW
J2-4
UNLOAD SW
J2-3
TO CONTROL PWA
OFF SW
J2-27
TO POWER SUPPLY
+5V
X → Y
CODER
7447
U4
LD4
LD3
LD2
LD1
MSB
LSB
J2-18
J2-17
J2-16
J2-15
TO CONTROL PWA
U3
220 Ω
DL7751
U1
U5
U6
U2
Rd4
Rd3
Rd2
Rd1
J2-22
J2-21
J2-20
J2-19
TO LOGIC INTERCONNECT
J2-24
J2-25
J2-23
TTL / mv
GND
7406
U8
U7
FILE PRO
SELECT
ON LINE
RESET
DIAGNOSTICS
BOT
J2-9
J2-11
J2-12
J2-13
J2-14
J2-10
TO CONTROL PWA
DS1
DS3
DS4
DS5
DS6
DS2
LD57-2
CQX-23-2
TO POWER SUPPLY
ON LED
OFF LED
DS7
DS8
J2-28
J2-29
COMPUTER PERIPHERALS INC.
SCHEMATIC
OPERATOR PANEL
CODE IDENT
05875
C
DWG NO
77005910
REV
B
SHEET 1
77005910

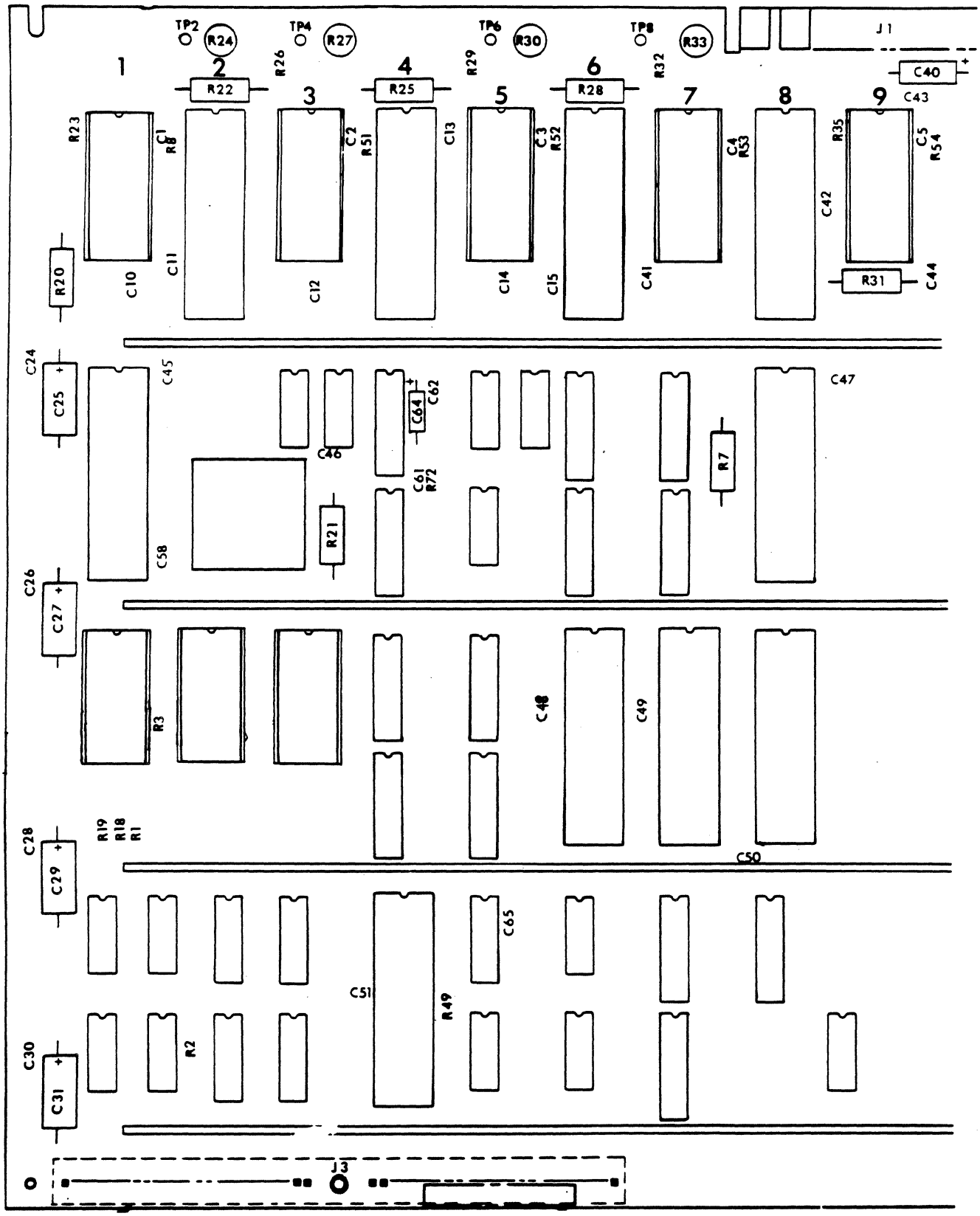


FORMATTER READ PWA

SHEET 1A

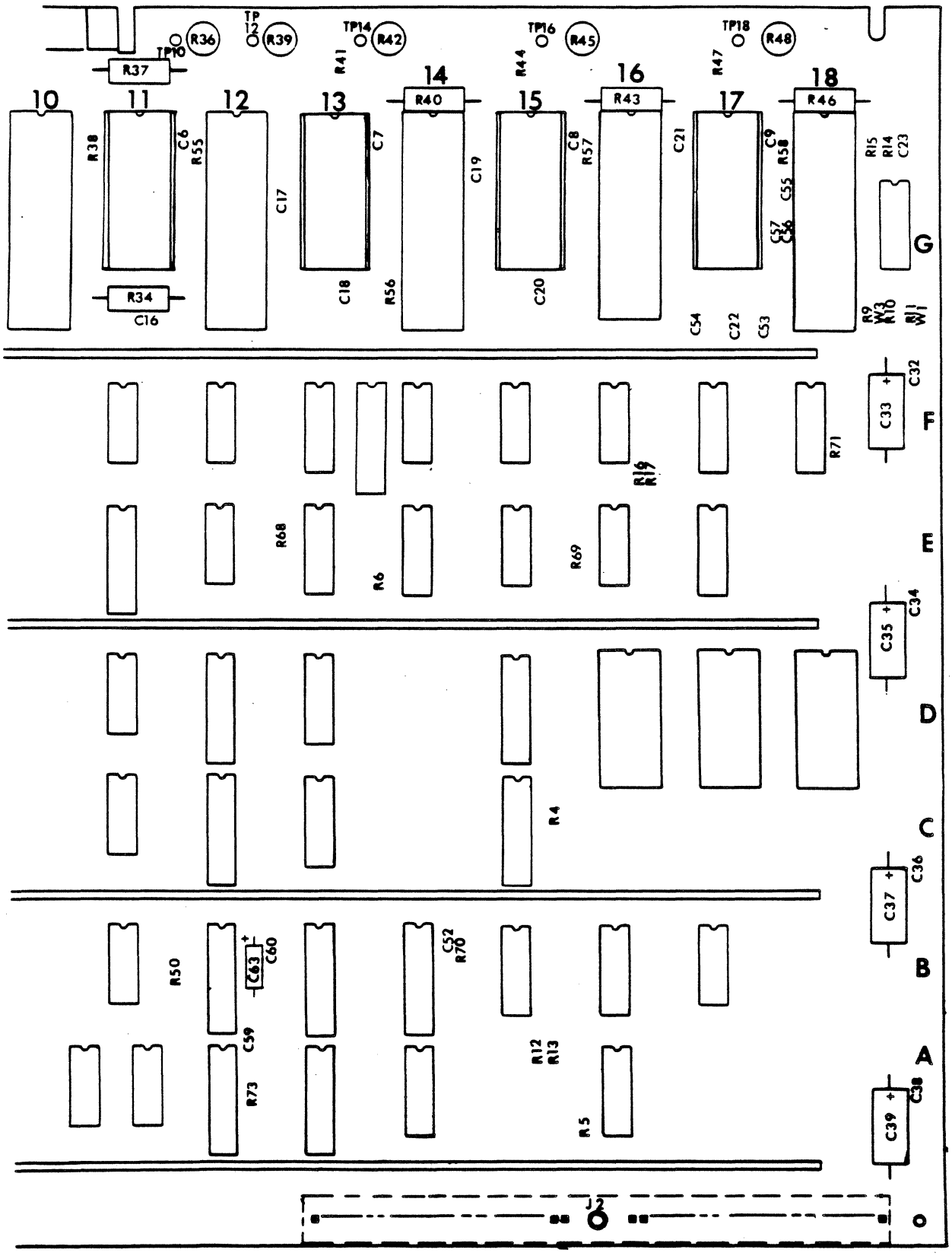


FORMATTER READ PWA

SHEET 1B

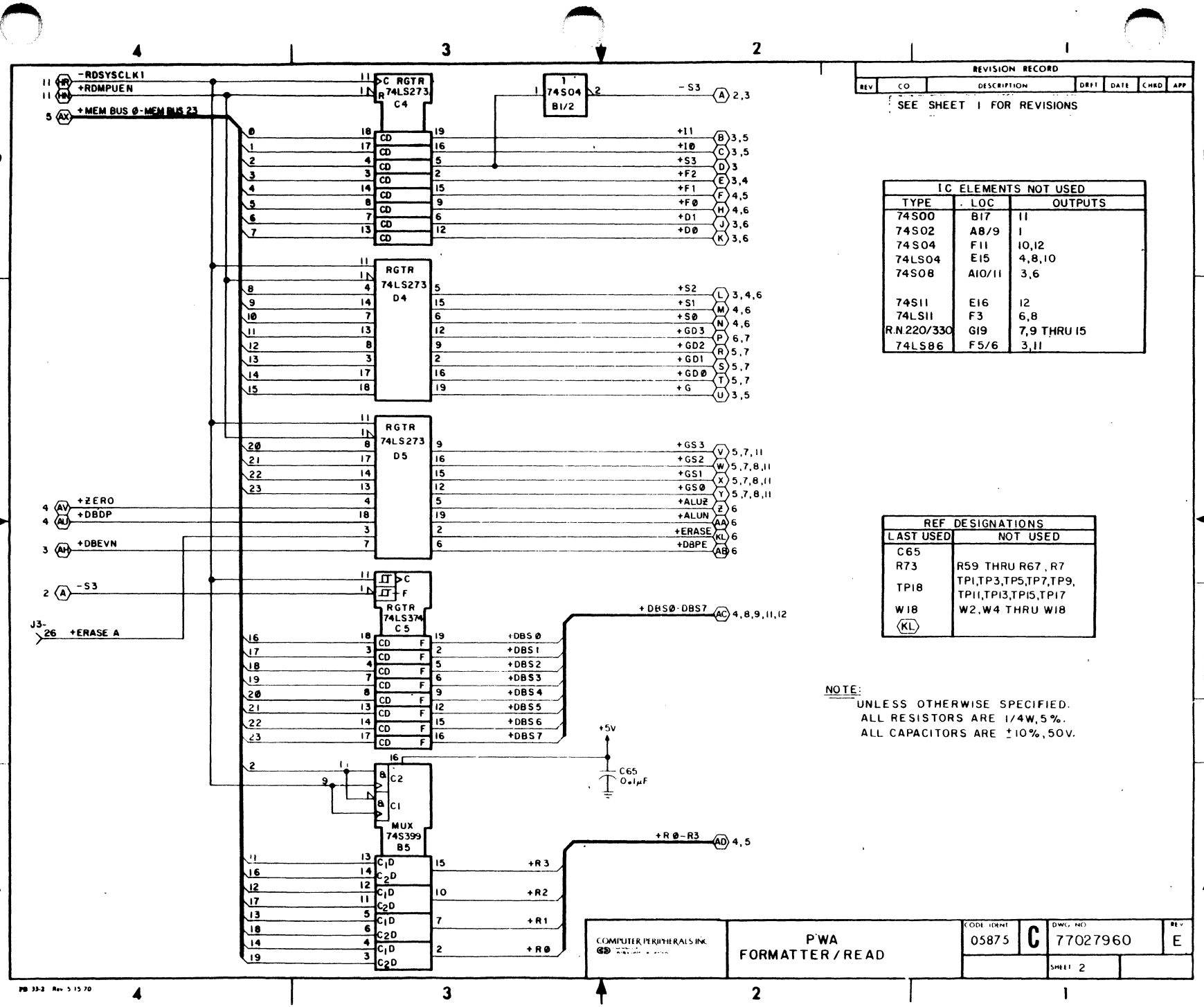


| REVISION RECORD | | | | | | |
|---|---|---|---|---|---|---|
| REV | CO | DESCRIPTION | DRFT | DATE | CHKD | APP |

SEE SHEET 1 FOR REVISIONS

| IC ELEMENTS NOT USED | | |
|---|---|---|
| TYPE | LOC | OUTPUTS |
| 74S00 | B17 | 11 |
| 74S02 | A8/9 | 1 |
| 74S04 | F11 | 10,12 |
| 74LS04 | E15 | 4,8,10 |
| 74S08 | A10/11 | 3,6 |
| 74S11 | E16 | 12 |
| 74LS11 | F3 | 6,8 |
| R.N.220/330 | G19 | 7,9 THRU 15 |
| 74LS86 | F5/6 | 3,11 |

| REF DESIGNATIONS | |
|---|---|
| LAST USED | NOT USED |
| C65 | |
| R73 | R59 THRU R67, R7 |
| TP18 | TP1,TP3,TP5,TP7,TP9, TP11,TP13,TP15,TP17 |
| W18 | W2,W4 THRU W18 |
| KL | |

NOTE:
UNLESS OTHERWISE SPECIFIED.
ALL RESISTORS ARE 1/4W,5%.
ALL CAPACITORS ARE ±10%,50V.

| | | | | |
|---|---|---|---|---|
| COMPUTER PERIPHERALS INC. | P'WA FORMATTER/READ | CODE IDENT 05875 | C | DWG NO 77027960 REV E |
| | | | | SHEET 2 |

77027960

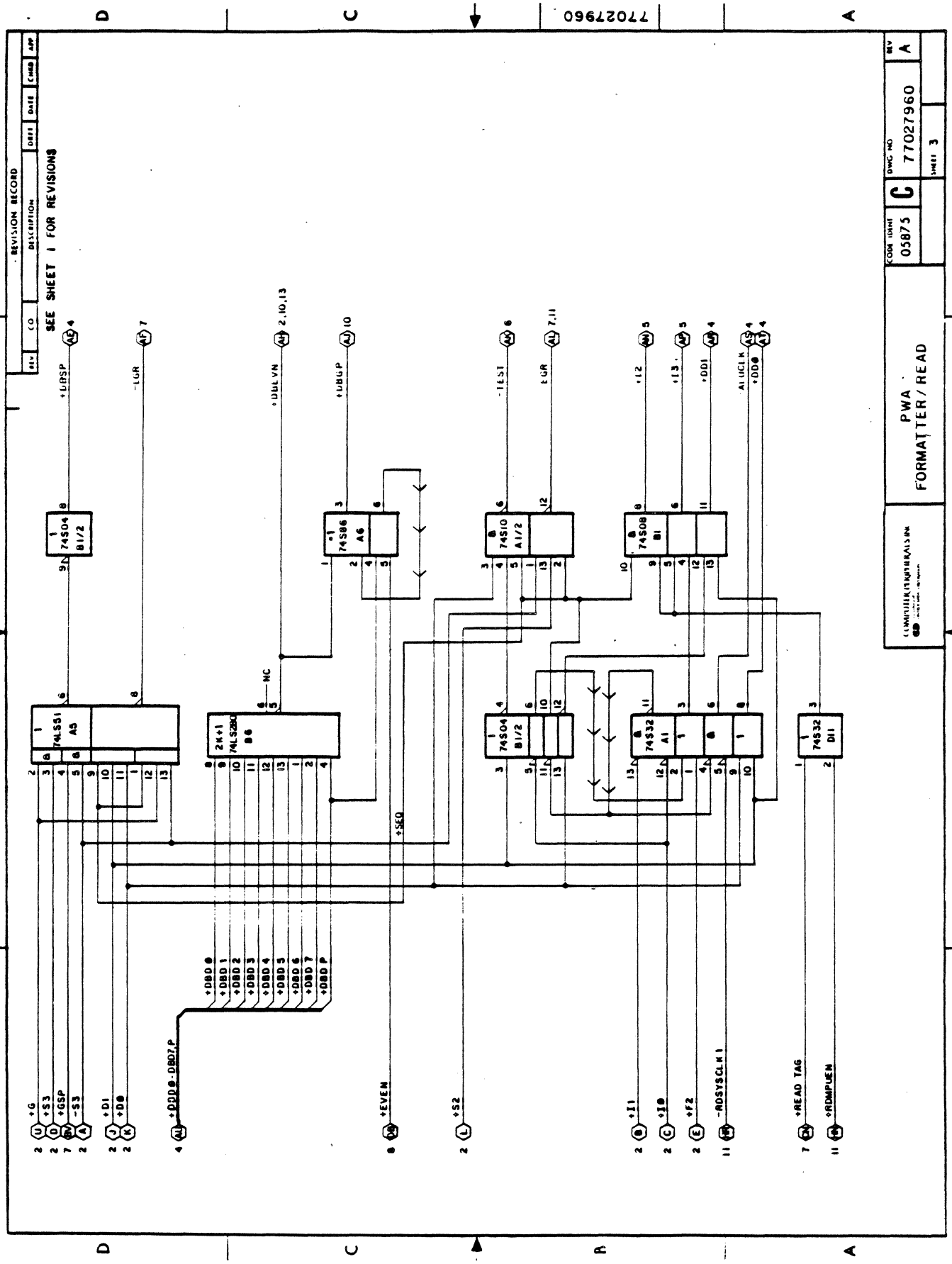

REVISION RECORD
SEE SHEET 1 FOR REVISIONS
PWA
FORMATTER/READ
05875
C
77027960
SHEET 3
A

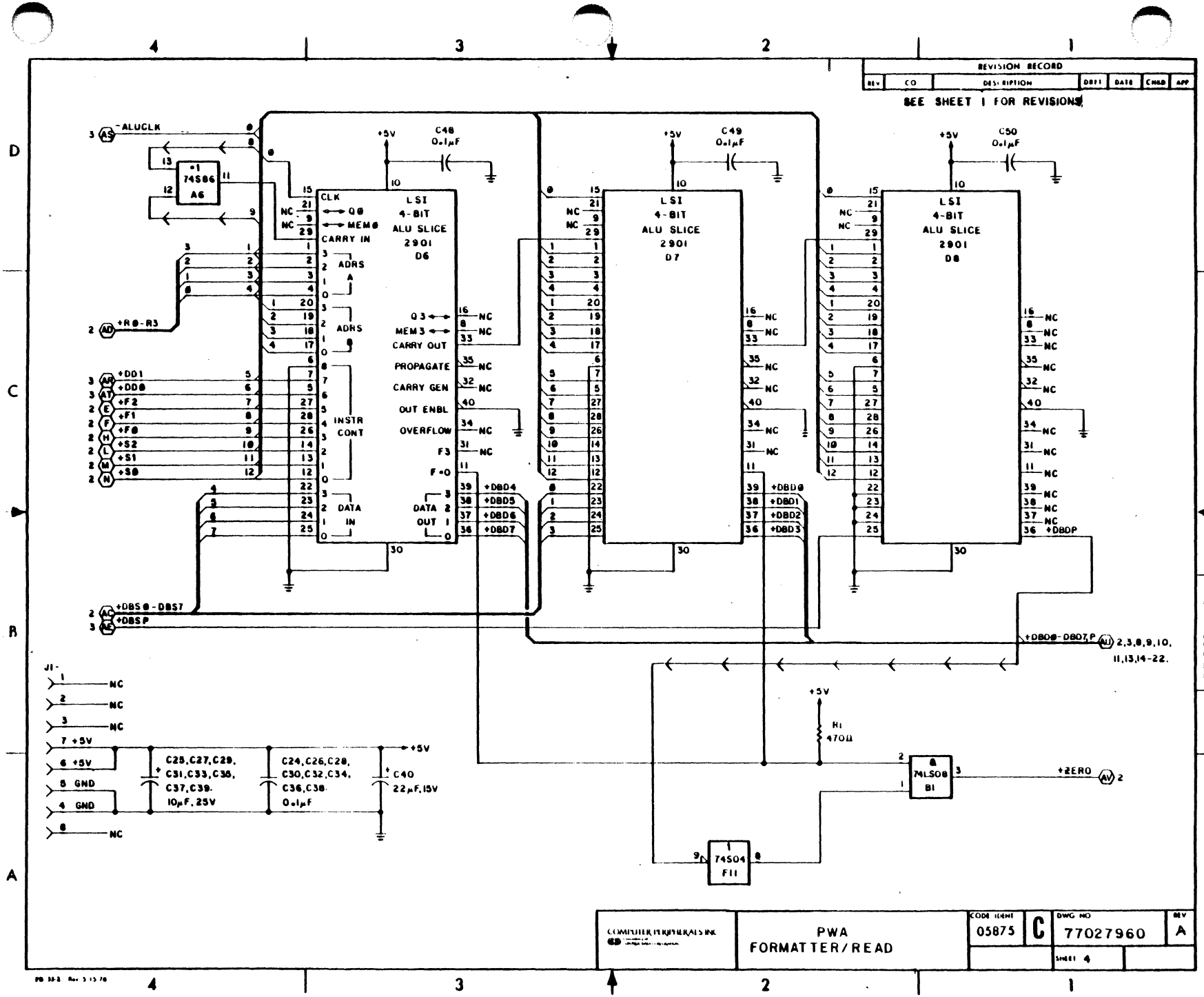
REVISION RECORD
REV
CO
DESCRIPTION
DRFT
DATE
CHKD
APP
SEE SHEET 1 FOR REVISIONS
-ALUCLK
*1
74S86
A6
+R0-R3
+DD1
+DD0
+F2
+F1
+F0
+S2
+S1
+S0
INSTR CONT
DATA IN
ADRS A
ADRS B
+DBS0-DBS7
+DBSP
C48
0.1µF
C49
0.1µF
C50
0.1µF
+5V
LSI
4-BIT
ALU SLICE
2901
D6
D7
D8
CLK
Q0
MEM0
CARRY IN
Q3
MEM3
CARRY OUT
PROPAGATE
CARRY GEN
OUT ENBL
OVERFLOW
F3
F=0
DATA 3
DATA 2
DATA 1
DATA 0
+DBD4
+DBD5
+DBD6
+DBD7
+DBD0
+DBD1
+DBD2
+DBD3
+DBDP
NC
+DB00-DB07,P
2,3,8,9,10,
11,13,14-22.
J1
NC
+5V
GND
C25,C27,C29,
C31,C33,C35,
C37,C39.
10µF, 25V
C24,C26,C28,
C30,C32,C34,
C36,C38.
0.1µF
C40
22µF,15V
R1
470Ω
74LS08
B1
+ZERO
74S04
F11
COMPUTER PERIPHERALS INC.
PWA
FORMATTER/READ
CODE IDENT
05875
C
DWG NO
77027960
REV
A
SHEET 4

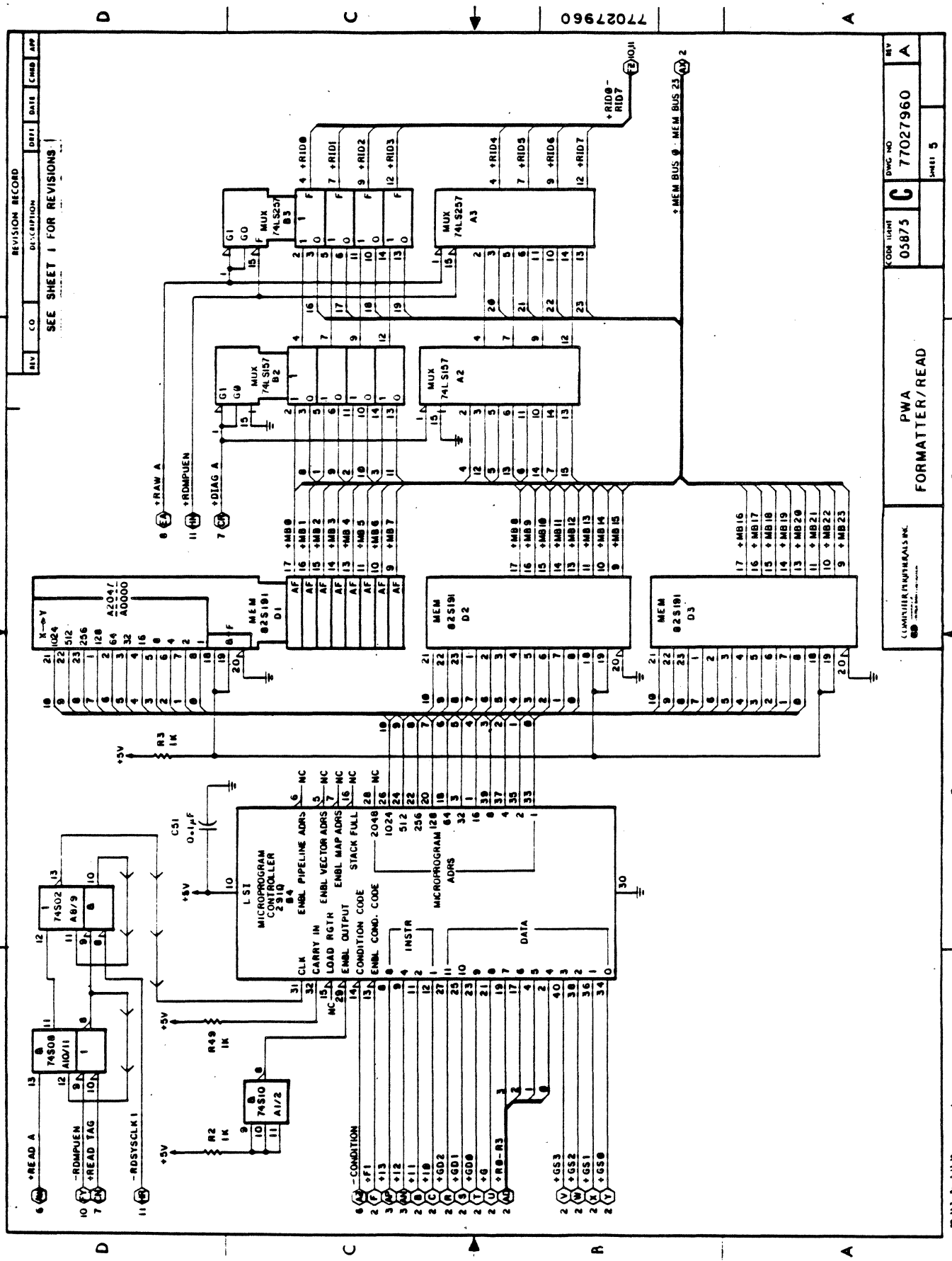
77027960
REVISION RECORD
SEE SHEET 1 FOR REVISIONS
PWA
FORMATTER/READ
CODE IDENT 05875
DWG NO 77027960
REV A
SHEET 5
MUX 74LS257 B3
MUX 74LS257 A3
MUX 74LS157 B2
MUX 74LS157 A2
MEM 82S191 D1
MEM 82S191 D2
MEM 82S191 D3
LSI MICROPROGRAM CONTROLLER 2910 B4
+RAW A
+ROMPUEN
+DIAG A
+RID0-RID7
+MEM BUS 0 - MEM BUS 23
+MB0
+MB1
+MB2
+MB3
+MB4
+MB5
+MB6
+MB7
+MB8
+MB9
+MB10
+MB11
+MB12
+MB13
+MB14
+MB15
+MB16
+MB17
+MB18
+MB19
+MB20
+MB21
+MB22
+MB23
+5V
R3 1K
R49 1K
R2 1K
C51 0.1μF
74S02 A8/9
74S08 A10/11
74S10 A1/2
*READ A
-ROMPUEN
*READ TAG
-RDSYSCLK1
-CONDITION
+F1
+I3
+I2
+I1
+I0
+GD2
+GD1
+GD0
+G
+R0-R3
+GS3
+GS2
+GS1
+GS0

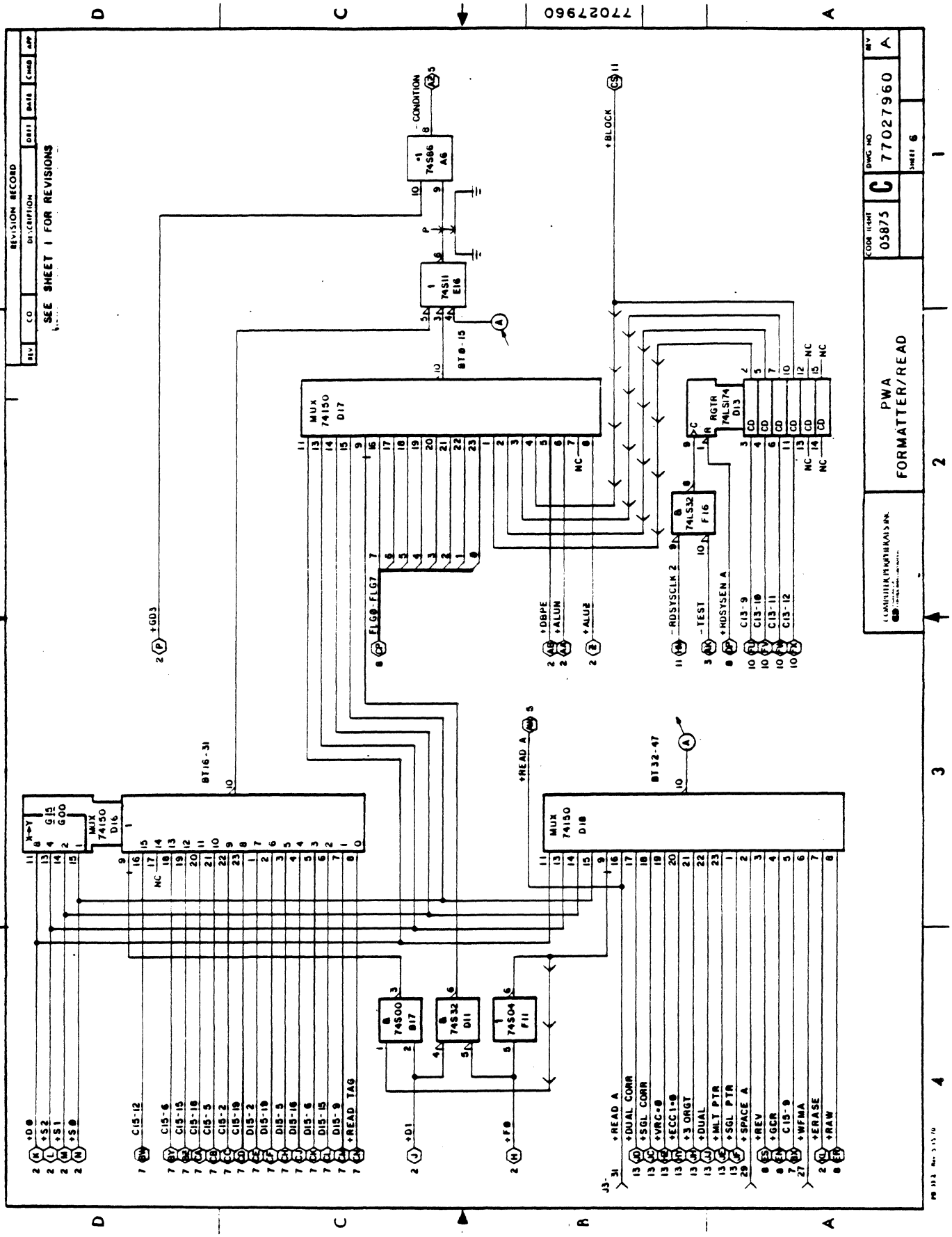

REVISION RECORD
SEE SHEET 1 FOR REVISIONS
PWA
FORMATTER/READ
77027960
05875
C
A
SHEET 6
MUX 74150 D17
MUX 74150 D16
MUX 74150 D18
74S86 A6
74S11 E16
74LS32 F16
RGTR 74LS174 D13
74S00 B17
74S32 D11
74S04 F11
CONDITION
+BLOCK
+READ A
+READ TAG
+DUAL CORR
+SGL CORR
+VRC-0
+ECC1-0
+3 ORGT
+DUAL
+MLT PTR
+SGL PTR
+SPACE A
+REV
+GCR
C15-9
+WFMA
+ERASE
+RAW
+DBPE
+ALUN
+ALU2
-RDSYSCLK 2
-TEST
+RDSYSEN A
C13-9
C13-10
C13-11
C13-12
+GD3
+D0
+S2
+S1
+S0
+D1
+F0

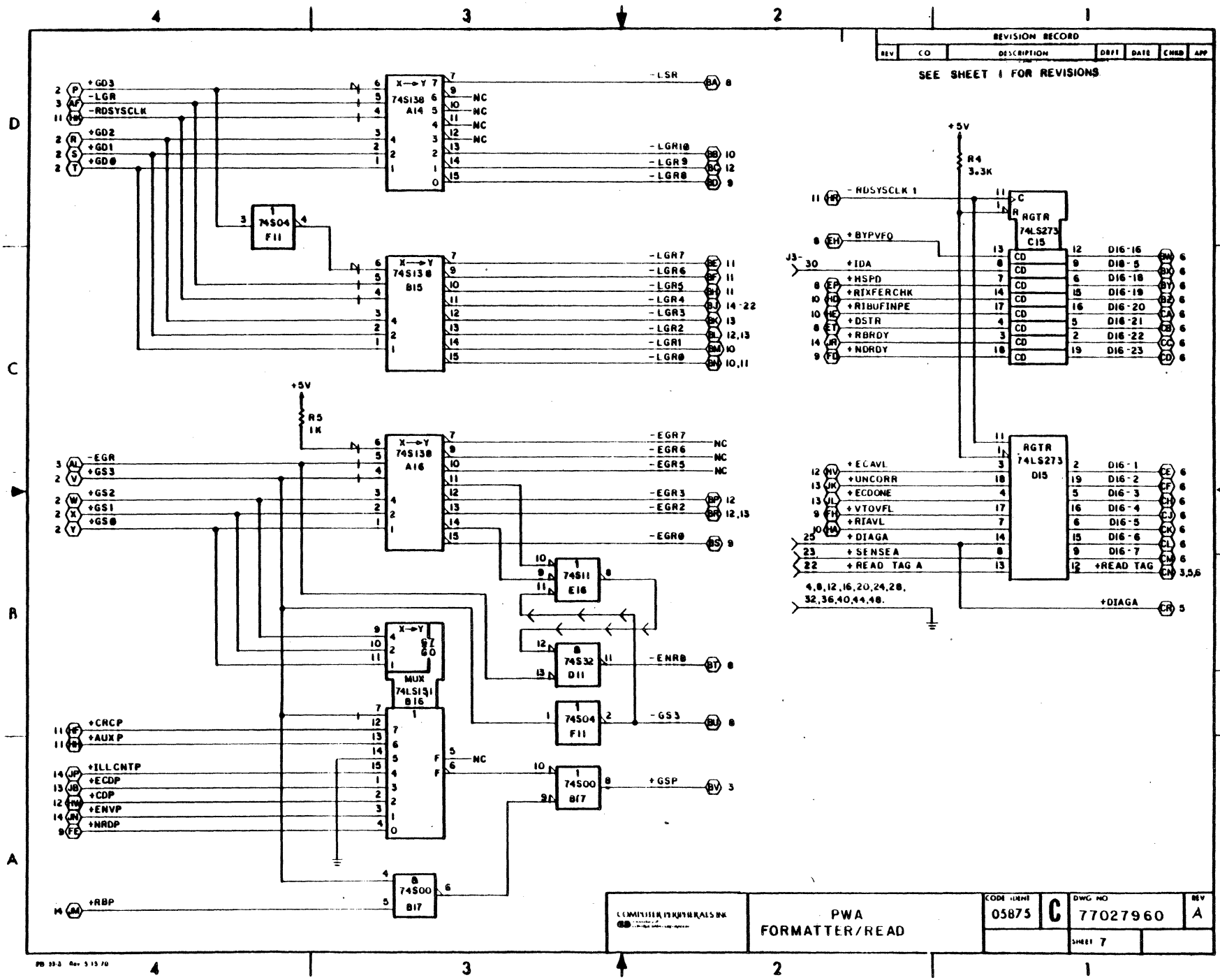
REVISION RECORD
REV | CO | DESCRIPTION | DRFT | DATE | CHKD | APP
SEE SHEET 1 FOR REVISIONS
+GD3
-LGR
-RDSYSCLK
+GD2
+GD1
+GD0
74S138 A14
74S04 F11
74S138 B15
-LSR
-LGR10
-LGR9
-LGR8
-LGR7
-LGR6
-LGR5
-LGR4
-LGR3
-LGR2
-LGR1
-LGR0
+5V
R4 3.3K
-RDSYSCLK 1
+BYPVFQ
J3-30
+IDA
+HSPD
+RIXFERCHK
+RIBUFINPE
+DSTR
+RBRDY
+NDRDY
RGTR 74LS273 C15
DI6-16
DI8-5
DI6-18
DI6-19
DI6-20
DI6-21
DI6-22
DI6-23
+5V
R5 1K
-EGR
+GS3
+GS2
+GS1
+GS0
74S138 A16
-EGR7
-EGR6
-EGR5
-EGR3
-EGR2
-EGR0
74S11 E16
74S32 D11
74S04 F11
-ENRB
-GS3
MUX 74LS151 B16
+CRCP
+AUXP
+ILLCNTP
+ECDP
+CDP
+ENVP
+NRDP
74S00 B17
+GSP
+RBP
RGTR 74LS273 D15
+ECAVL
+UNCORR
+ECDONE
+VTOVFL
+RIAVL
+DIAGA
+SENSEA
+READ TAG A
DI6-1
DI6-2
DI6-3
DI6-4
DI6-5
DI6-6
DI6-7
+READ TAG
4,8,12,16,20,24,28,32,36,40,44,48.
+DIAGA
COMPUTER PERIPHERALS INC.
PWA FORMATTER/READ
CODE IDENT 05875
C
DWG NO 77027960
REV A
SHEET 7

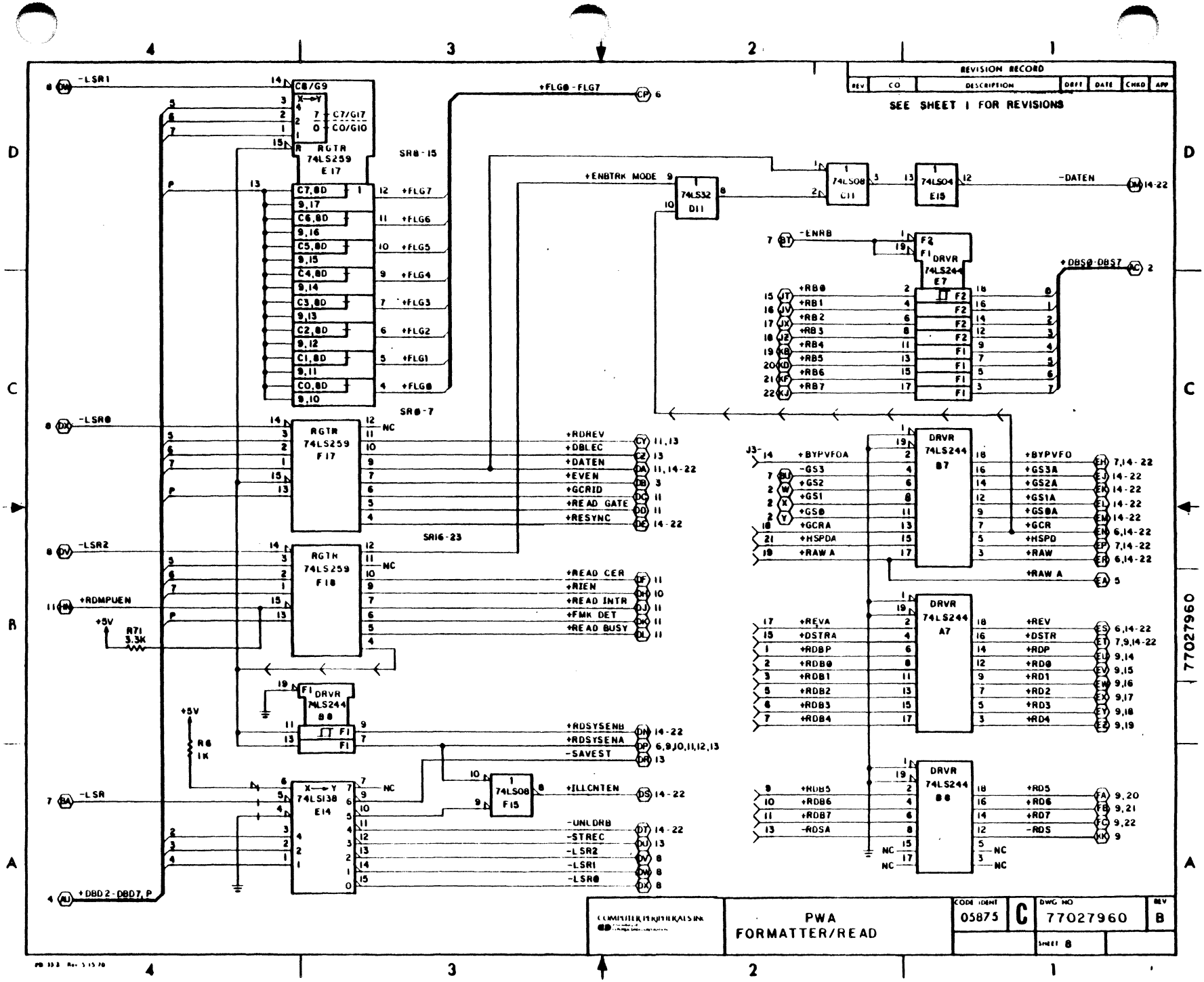
REVISION RECORD
REV | CO | DESCRIPTION | DRFT | DATE | CHKD | APP
SEE SHEET 1 FOR REVISIONS
-LSR1
-LSR0
-LSR2
+RDMPUEN
+5V
R71 3.3K
R6 1K
-LSR
+DBD2 - DBD7, P
C8/G9
C7/G17
C0/G10
RGTR 74LS259 E17
SR8 - 15
SR0 - 7
+FLG0 - FLG7
C7,8D
C6,8D
C5,8D
C4,8D
C3,8D
C2,8D
C1,8D
C0,8D
+FLG7
+FLG6
+FLG5
+FLG4
+FLG3
+FLG2
+FLG1
+FLG0
RGTR 74LS259 F17
SR16-23
+RDREV
+DBLEC
+DATEN
+EVEN
+GCRID
+READ GATE
+RESYNC
RGTR 74LS259 F18
+READ CER
+RIEN
+READ INTR
+FMK DET
+READ BUSY
DRVR 74LS244 B8
+RDSYSENB
+RDSYSENA
-SAVEST
74LSI38 E14
74LS08 F15
+ILLCNTEN
-UNLDRB
-STREC
-LSR2
-LSR1
-LSR0
+ENBTRK MODE
74LS32 D11
74LS08 C11
74LS04 E15
-DATEN
-ENRB
DRVR 74LS244 E7
+RB0
+RB1
+RB2
+RB3
+RB4
+RB5
+RB6
+RB7
+DB$0-DB$7
DRVR 74LS244 B7
+BYPVFOA
-GS3
+GS2
+GS1
+GS0
+GCRA
+HSPDA
+RAW A
+BYPVFO
+GS3A
+GS2A
+GS1A
+GS0A
+GCR
+HSPD
+RAW
DRVR 74LS244 A7
+REVA
+DSTRA
+RDBP
+RDB0
+RDB1
+RDB2
+RDB3
+RDB4
+REV
+DSTR
+RDP
+RD0
+RD1
+RD2
+RD3
+RD4
DRVR 74LS244 B8
+RDB5
+RDB6
+RDB7
-RDSA
+RD5
+RD6
+RD7
-RDS
NC
COMPUTER PERIPHERALS INC
PWA
FORMATTER/READ
CODE IDENT 05875
C
DWG NO 77027960
REV B
SHEET 8

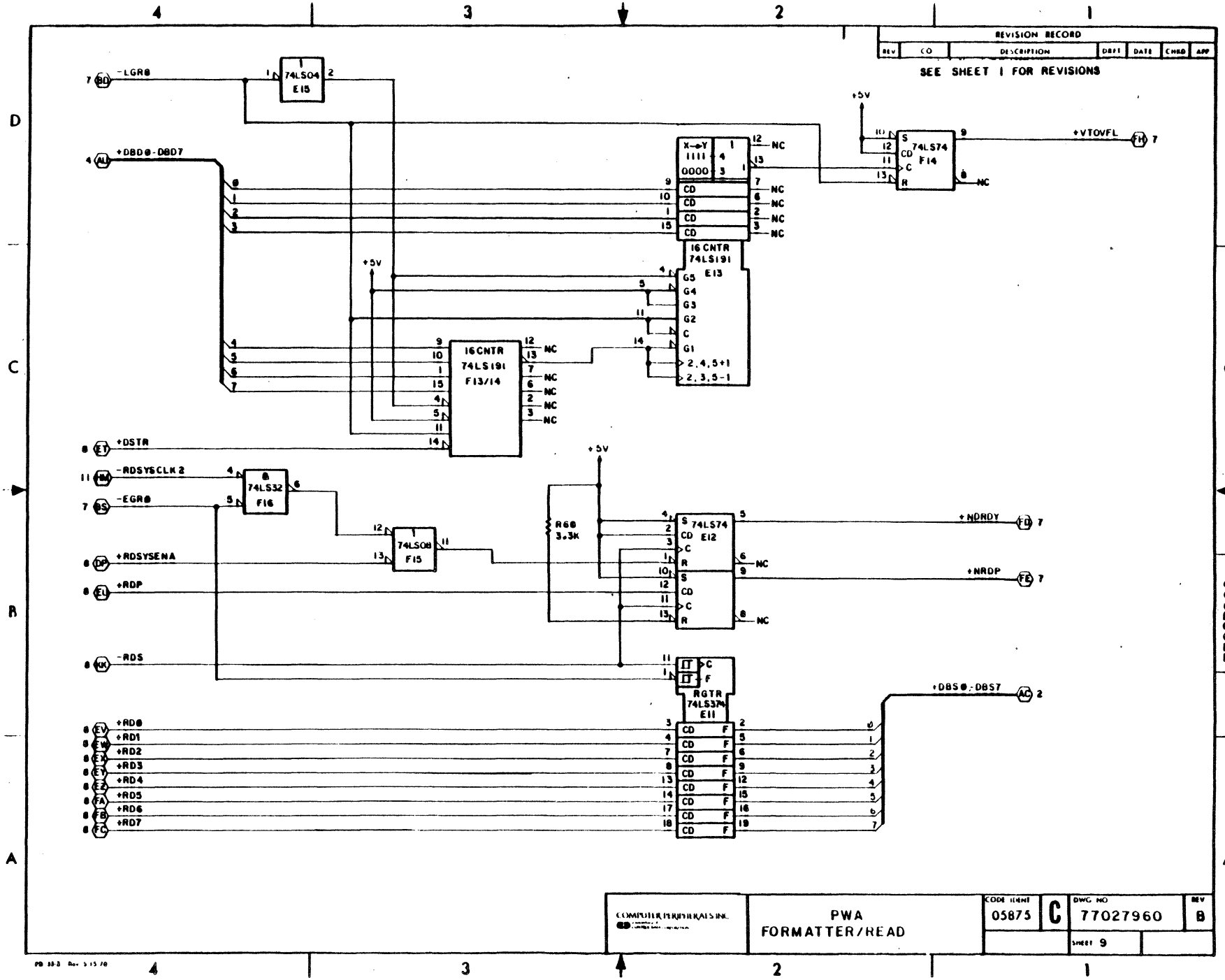
REVISION RECORD
REV | CO | DESCRIPTION | DRFT | DATE | CHKD | APP
SEE SHEET 1 FOR REVISIONS
-LGR0
74LS04 E15
+DB0-DB7
+5V
X→Y 1111 0000
74LS74 F14
+VTOVFL
16 CNTR 74LS191 E13
16 CNTR 74LS191 F13/14
+DSTR
-RDSYSCLK 2
-EGR0
74LS32 F16
74LS08 F15
R60 3.3K
74LS74 E12
+NDRDY
+NRDP
+RDSYSENA
+RDP
-RDS
RGTR 74LS374 E11
+DBS0-DBS7
+RD0
+RD1
+RD2
+RD3
+RD4
+RD5
+RD6
+RD7
COMPUTER PERIPHERALS INC.
PWA
FORMATTER/READ
CODE IDENT 05875
C
DWG NO 77027960
REV B
SHEET 9

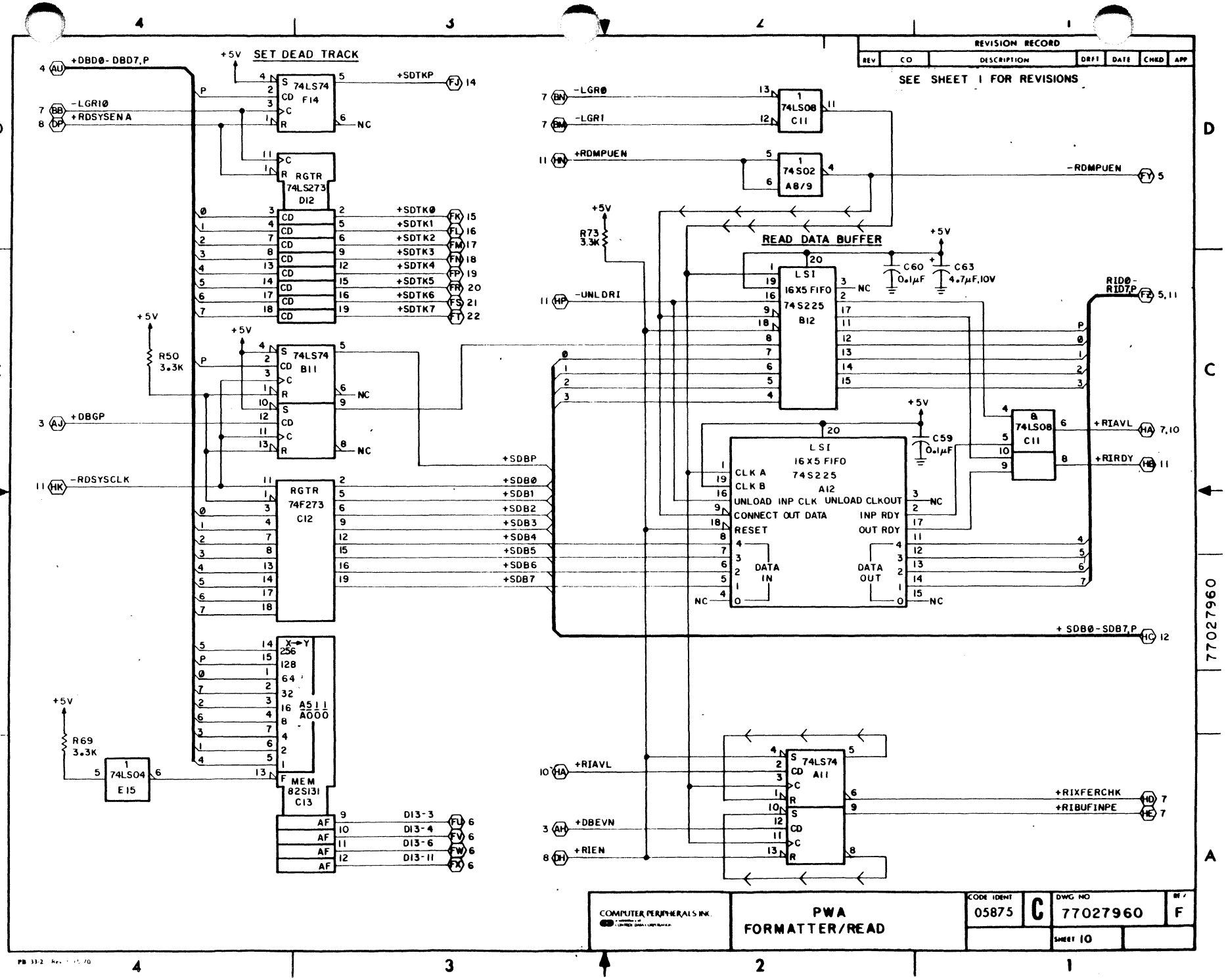
REVISION RECORD
REV | CO | DESCRIPTION | DRFT | DATE | CHKD | APP
SEE SHEET 1 FOR REVISIONS
SET DEAD TRACK
+DBD0- DBD7,P
-LGR10
+RDSYSENA
+5V
74LS74 F14
+SDTKP
NC
RGTR 74LS273 D12
+SDTK0
+SDTK1
+SDTK2
+SDTK3
+SDTK4
+SDTK5
+SDTK6
+SDTK7
R50 3.3K
74LS74 B11
+DBGP
-RDSYSCLK
RGTR 74F273 C12
+SDBP
+SDB0
+SDB1
+SDB2
+SDB3
+SDB4
+SDB5
+SDB6
+SDB7
R69 3.3K
74LS04 E15
X→Y 256 128 64 32 16 8 4 2 1
A5 1 1 A000
MEM 82S131 C13
DI3-3
DI3-4
DI3-6
DI3-11
-LGR0
-LGR1
74LS08 C11
+RDMPUEN
74S02 A8/9
-RDMPUEN
R73 3.3K
READ DATA BUFFER
-UNLDRI
LSI 16X5 FIFO 74S225 B12
C60 0.1μF
C63 4.7μF,10V
RID0- RID7P
LSI 16X5 FIFO 74S225 A12
CLK A
CLK B
UNLOAD INP CLK
UNLOAD CLKOUT
CONNECT OUT DATA
INP RDY
RESET
OUT RDY
DATA IN
DATA OUT
C59 0.1μF
74LS08 C11
+RIAVL
+RIRDY
+SDB0-SDB7,P
74LS74 A11
+RIXFERCHK
+RIBUFINPE
+DBEVN
+RIEN
COMPUTER PERIPHERALS INC.
PWA FORMATTER/READ
CODE IDENT 05875
C
DWG NO 77027960
REV F
SHEET 10

| REVISION RECORD | | | | | | |
|---|---|---|---|---|---|---|
| REV | CO | DESCRIPTION | DRFT | DATE | CHKD | APP |

SEE SHEET 1 FOR REVISIONS

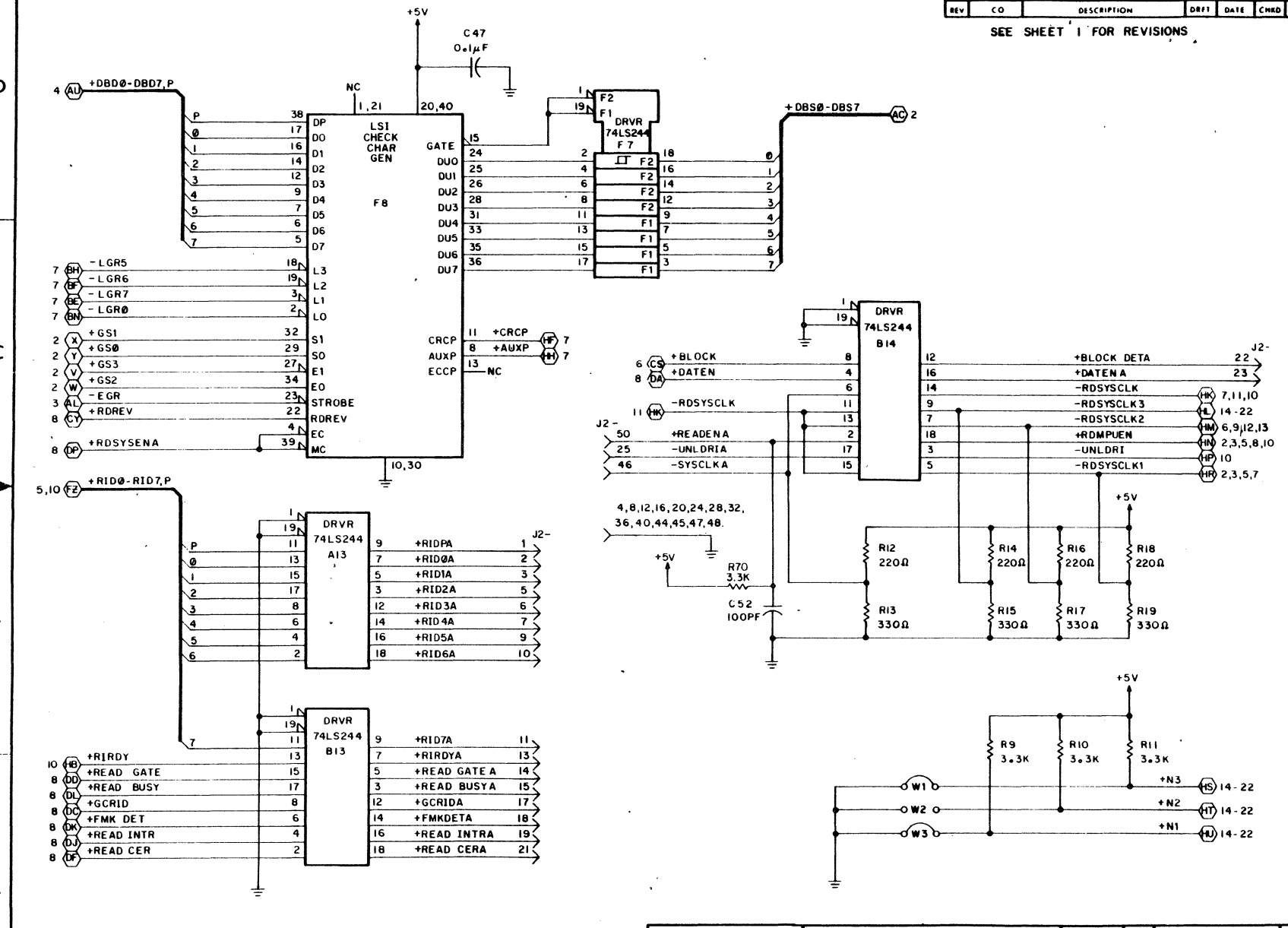


| | | | | |
|---|---|---|---|---|
| COMPUTER PERIPHERALS INC | PWA FORMATTER/READ | CODE IDENT 05875 | C | DWG NO 77027960 REV E |
| | | | | SHEET 11 |

PB 33-2 Rev. 5.15.70

# ERROR CORRECTION BUFFER

| REVISION RECORD | | | | | | |
|---|---|---|---|---|---|---|
| REV | CO | DESCRIPTION | DRFT | DATE | CHKD | APP |

SEE SHEET 1 FOR REVISIONS

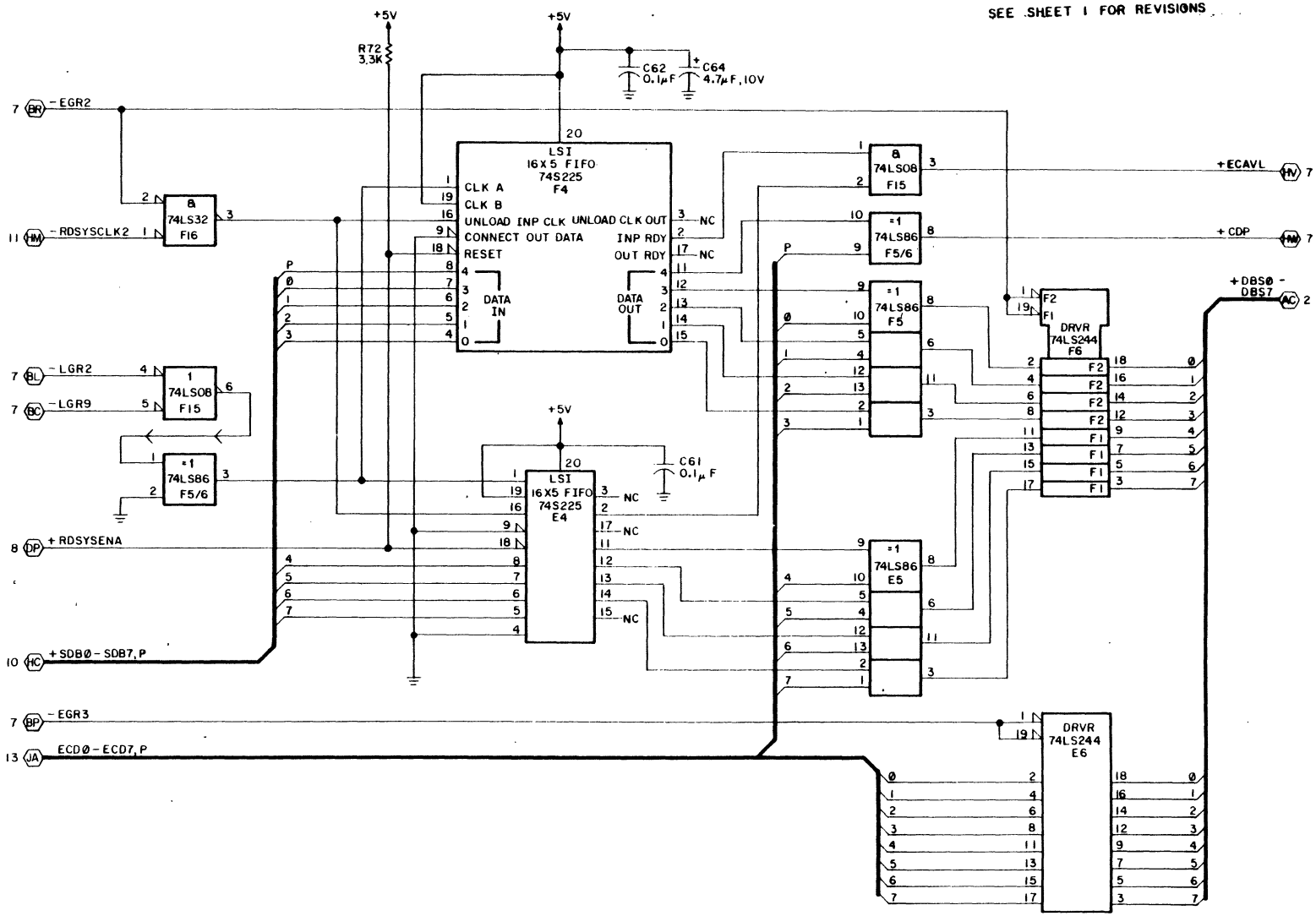


| | | | | |
|---|---|---|---|---|
| COMPUTER PERIPHERALS INC | PWA FORMATTER / READ | CODE IDENT 05875 | C | DWG NO 77027960 REV F |
| | | | | SHEET 12 |

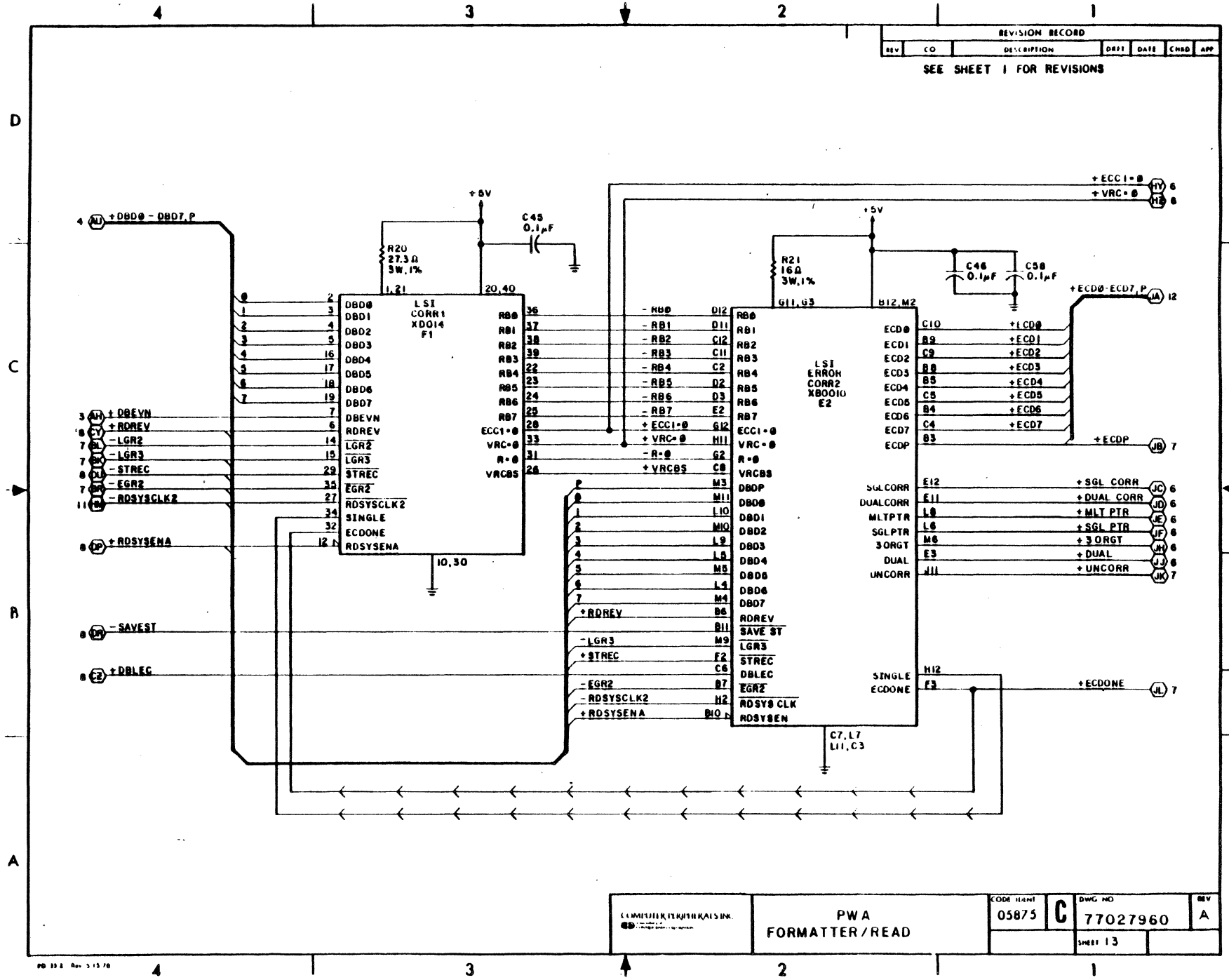
REVISION RECORD
REV
CO
DESCRIPTION
DRFT
DATE
CHKD
APP
SEE SHEET 1 FOR REVISIONS
+DBD0 - DBD7, P
+5V
C45 0.1µF
R20 27.3Ω 3W, 1%
1, 21
20, 40
LSI CORR1 XD014 F1
DBD0
DBD1
DBD2
DBD3
DBD4
DBD5
DBD6
DBD7
DBEVN
RDREV
LGR2
LGR3
STREC
EGR2
RDSYSCLK2
SINGLE
ECDONE
RDSYSENA
RB0
RB1
RB2
RB3
RB4
RB5
RB6
RB7
ECC1•0
VRC•0
R•0
VRCBS
10, 30
+DBEVN
+RDREV
-LGR2
-LGR3
-STREC
-EGR2
-RDSYSCLK2
+RDSYSENA
-SAVEST
+DBLEG
+ECC1•0
+VRC•0
R21 16Ω 3W, 1%
C46 0.1µF
C58 0.1µF
G11, G3
B12, M2
LSI ERROR CORR2 XB0010 E2
ECD0
ECD1
ECD2
ECD3
ECD4
ECD5
ECD6
ECD7
ECDP
SGLCORR
DUALCORR
MLTPTR
SGLPTR
3ORGT
DUAL
UNCORR
SAVE ST
RDSYS CLK
RDSYSEN
C7, L7 L11, C3
+ECD0-ECD7, P
+ECD0
+ECD1
+ECD2
+ECD3
+ECD4
+ECD5
+ECD6
+ECD7
+ECDP
+SGL CORR
+DUAL CORR
+MLT PTR
+SGL PTR
+3 ORGT
+DUAL
+UNCORR
+ECDONE
COMPUTER PERIPHERALS INC.
PWA
FORMATTER/READ
CODE IDENT
05875
C
DWG NO
77027960
REV
A
SHEET 13

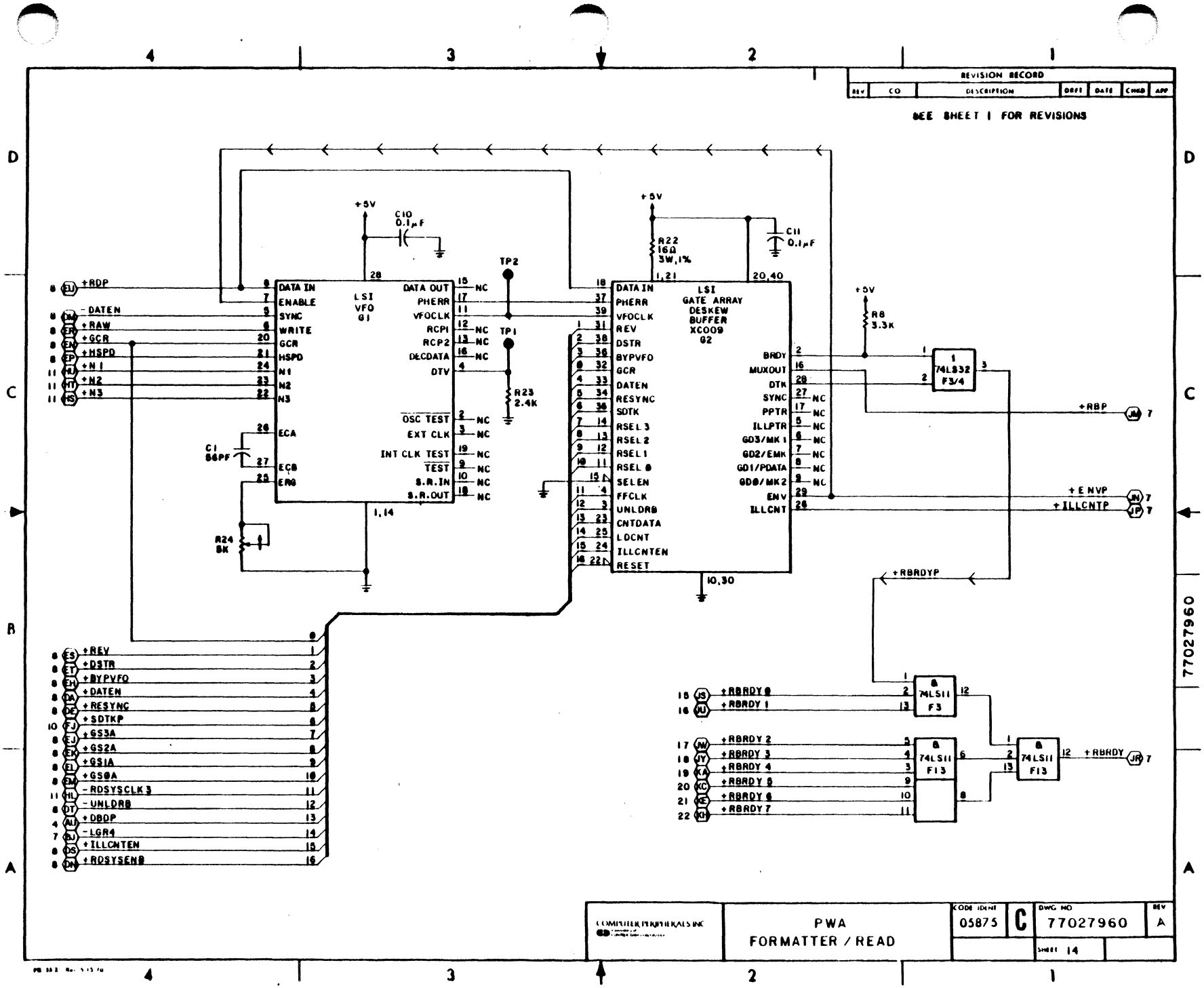
REVISION RECORD
REV | CO | DESCRIPTION | ORIT | DATE | CHKD | APP
SEE SHEET 1 FOR REVISIONS
+5V
C10 0.1µF
C11 0.1µF
R22 16Ω 3W,1%
TP2
TP1
R23 2.4K
C1 56PF
R24 5K
R8 3.3K
LSI VFO G1
LSI GATE ARRAY DESKEW BUFFER XC009 G2
DATA IN
ENABLE
SYNC
WRITE
GCR
HSPD
N1
N2
N3
ECA
ECB
ERG
DATA OUT
PHERR
VFOCLK
RCP1
RCP2
DECDATA
DTV
OSC TEST
EXT CLK
INT CLK TEST
TEST
S.R.IN
S.R.OUT
REV
DSTR
BYPVFO
DATEN
RESYNC
SDTK
RSEL 3
RSEL 2
RSEL 1
RSEL 0
SELEN
FFCLK
UNLDRB
CNTDATA
LDCNT
ILLCNTEN
RESET
BRDY
MUXOUT
DTK
SYNC
PPTR
ILLPTR
GD3/MK1
GD2/EMK
GD1/PDATA
GD0/MK2
ENV
ILLCNT
74LS32 F3/4
74LS11 F3
74LS11 F13
+RDP
-DATEN
+RAW
+GCR
+HSPD
+N1
+N2
+N3
+REV
+DSTR
+BYPVFO
+DATEN
+RESYNC
+SDTKP
+GS3A
+GS2A
+GS1A
+GS0A
-RDSYSCLK3
-UNLDRB
+DBDP
-LGR4
+ILLCNTEN
+RDSYSENB
+RBRDYP
+RBRDY 0
+RBRDY 1
+RBRDY 2
+RBRDY 3
+RBRDY 4
+RBRDY 5
+RBRDY 6
+RBRDY 7
+RBRDY
+RBP
+ENVP
+ILLCNTP
COMPUTER PERIPHERALS INC
PWA
FORMATTER / READ
CODE IDENT 05875
C
DWG NO 77027960
REV A
SHEET 14

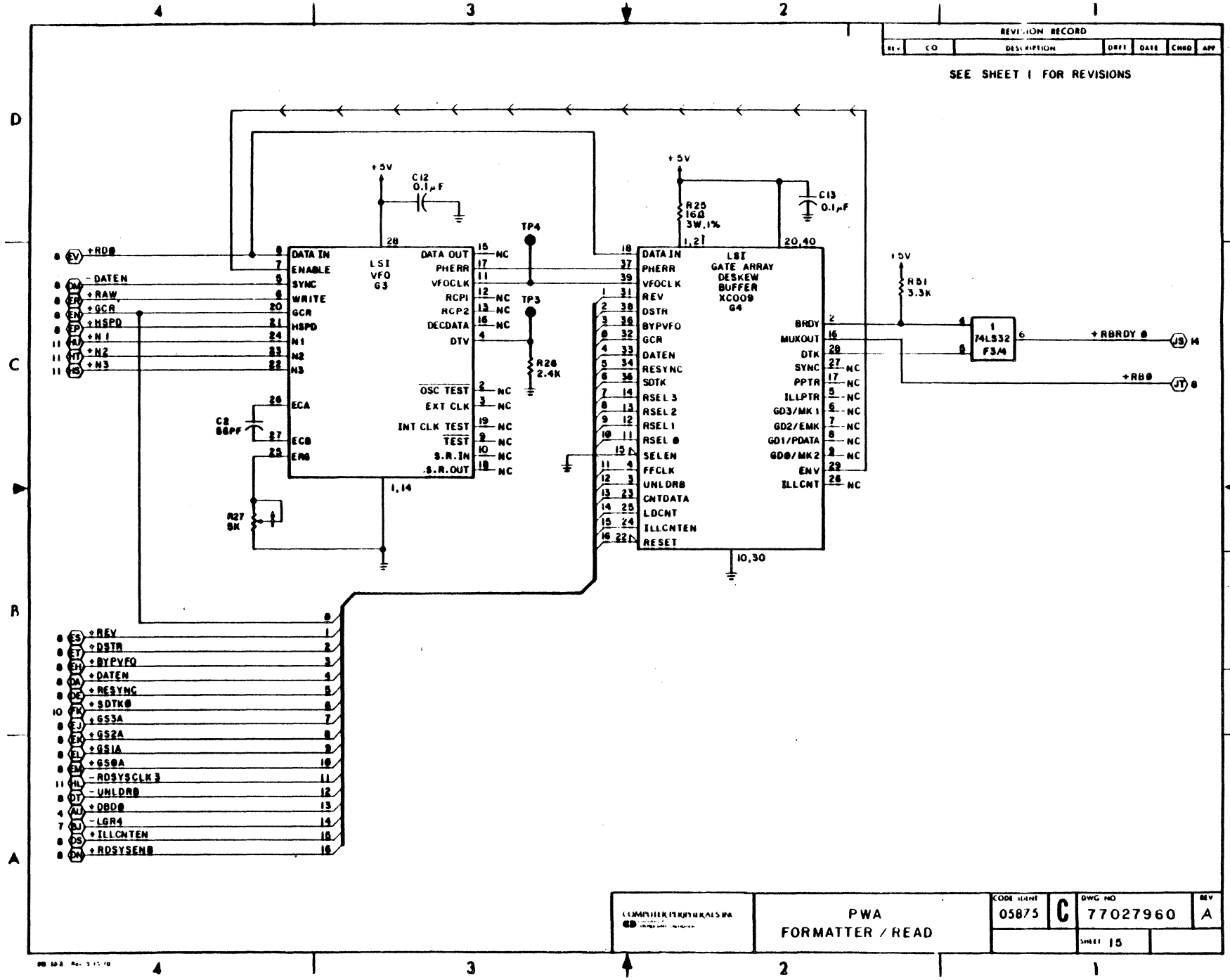
REVISION RECORD
REV | CO | DESCRIPTION | DRFT | DATE | CHKD | APP
SEE SHEET 1 FOR REVISIONS
+5V
C12 0.1µF
C13 0.1µF
R25 160Ω 3W,1%
R51 3.3K
TP4
TP3
R26 2.4K
C2 68PF
R27 8K
LSI VFO G3
DATA IN
ENABLE
SYNC
WRITE
GCR
HSPD
N1
N2
N3
ECA
ECB
ERB
DATA OUT
PHERR
VFOCLK
RCPI
RCP2
DECDATA
DTV
OSC TEST
EXT CLK
INT CLK TEST
TEST
S.R.IN
S.R.OUT
LSI GATE ARRAY DESKEW BUFFER XC009 G4
REV
DSTR
BYPVFO
DATEN
RESYNC
SDTK
RSEL 3
RSEL 2
RSEL 1
RSEL 0
SELEN
FFCLK
UNLDRB
CNTDATA
LDCNT
ILLCNTEN
RESET
BRDY
MUXOUT
DTK
SYNC
PPTR
ILLPTR
GD3/MK1
GD2/EMK
GD1/PDATA
GD0/MK2
ENV
ILLCNT
74LS32 F3/4
+RBRDY 0
+RB0
+RD0
-DATEN
+RAW
+GCR
+HSPD
+N1
+N2
+N3
+REV
+DSTR
+BYPVFO
+DATEN
+RESYNC
+SDTK0
+GS3A
+GS2A
+GS1A
+GS0A
-RDSYSCLK3
-UNLDR0
+DB0
-LGR4
+ILLCNTEN
+RDSYSEN0
COMPUTER PERIPHERALS INC
PWA
FORMATTER / READ
CODE IDENT 05875
C
DWG NO 77027960
REV A
SHEET 15

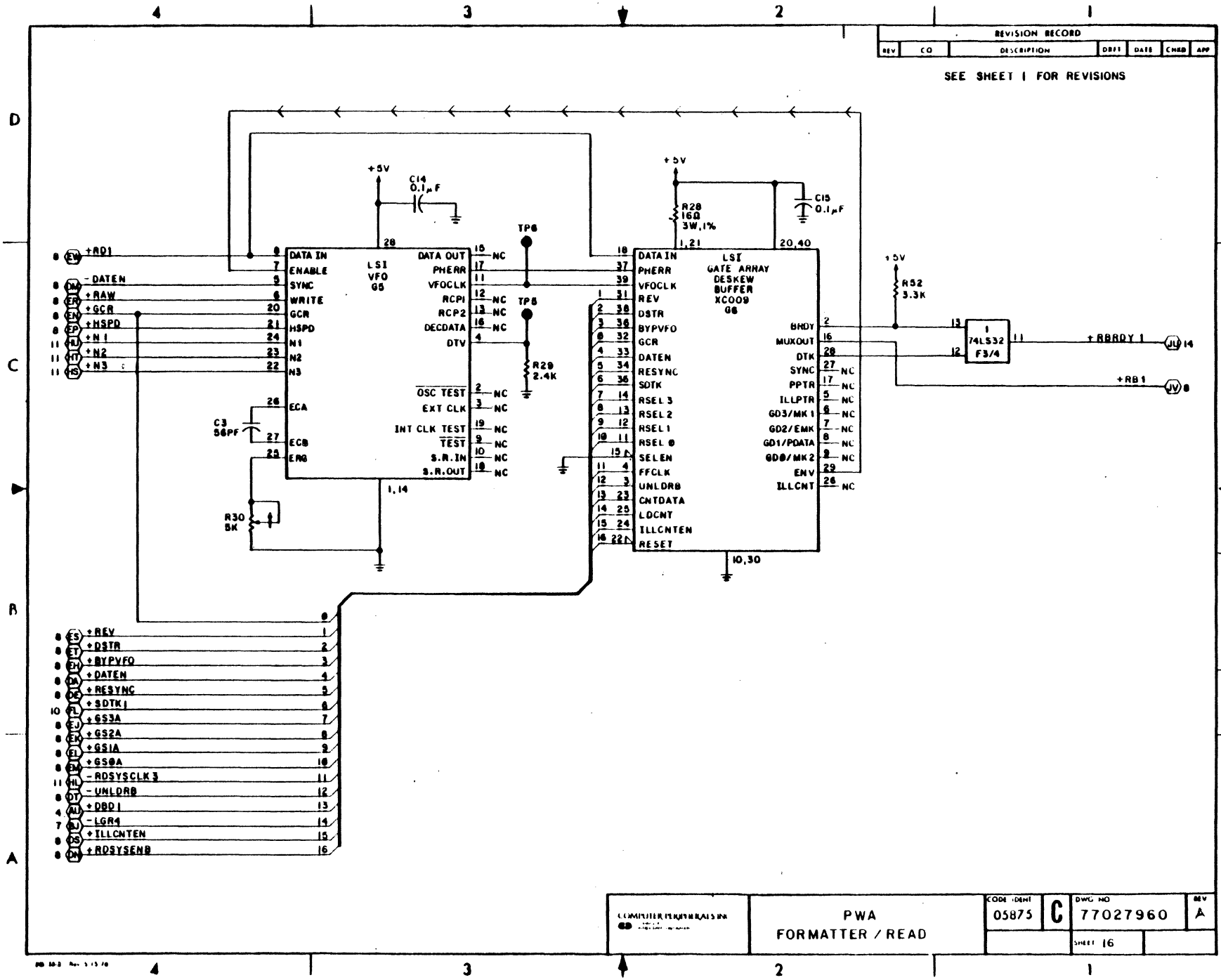
REVISION RECORD
REV
CO
DESCRIPTION
DRFT
DATE
CHKD
APP
SEE SHEET 1 FOR REVISIONS
+5V
C14 0.1μF
C15 0.1μF
R28 16Ω 3W,1%
R52 3.3K
R29 2.4K
R30 5K
C3 56PF
TP6
TP8
LSI VFO G5
DATA IN
ENABLE
SYNC
WRITE
GCR
HSPD
N1
N2
N3
ECA
ECB
ERG
DATA OUT
PHERR
VFOCLK
RCPI
RCP2
DECDATA
DTV
OSC TEST
EXT CLK
INT CLK TEST
TEST
S.R.IN
S.R.OUT
LSI GATE ARRAY DESKEW BUFFER XCOO9 G6
DATA IN
PHERR
VFOCLK
REV
DSTR
BYPVFO
GCR
DATEN
RESYNC
SDTK
RSEL 3
RSEL 2
RSEL 1
RSEL 0
SELEN
FFCLK
UNLDRB
CNTDATA
LDCNT
ILLCNTEN
RESET
BRDY
MUXOUT
DTK
SYNC
PPTR
ILLPTR
GD3/MK 1
GD2/EMK
GD1/PDATA
GD0/MK 2
ENV
ILLCNT
1,14
1,21
20,40
10,30
74LS32 F3/4
+RD1
-DATEN
+RAW
+GCR
+HSPD
+N 1
+N2
+N3
+REV
+DSTR
+BYPVFO
+DATEN
+RESYNC
+SDTK1
+GS3A
+GS2A
+GS1A
+GS0A
-RDSYSCLK 3
-UNLDRB
+DBD 1
-LGR4
+ILLCNTEN
+RDSYSENB
+RBRDY 1
+RB 1
PWA
FORMATTER / READ
CODE IDENT
05875
C
DWG NO
77027960
REV
A
SHEET 16

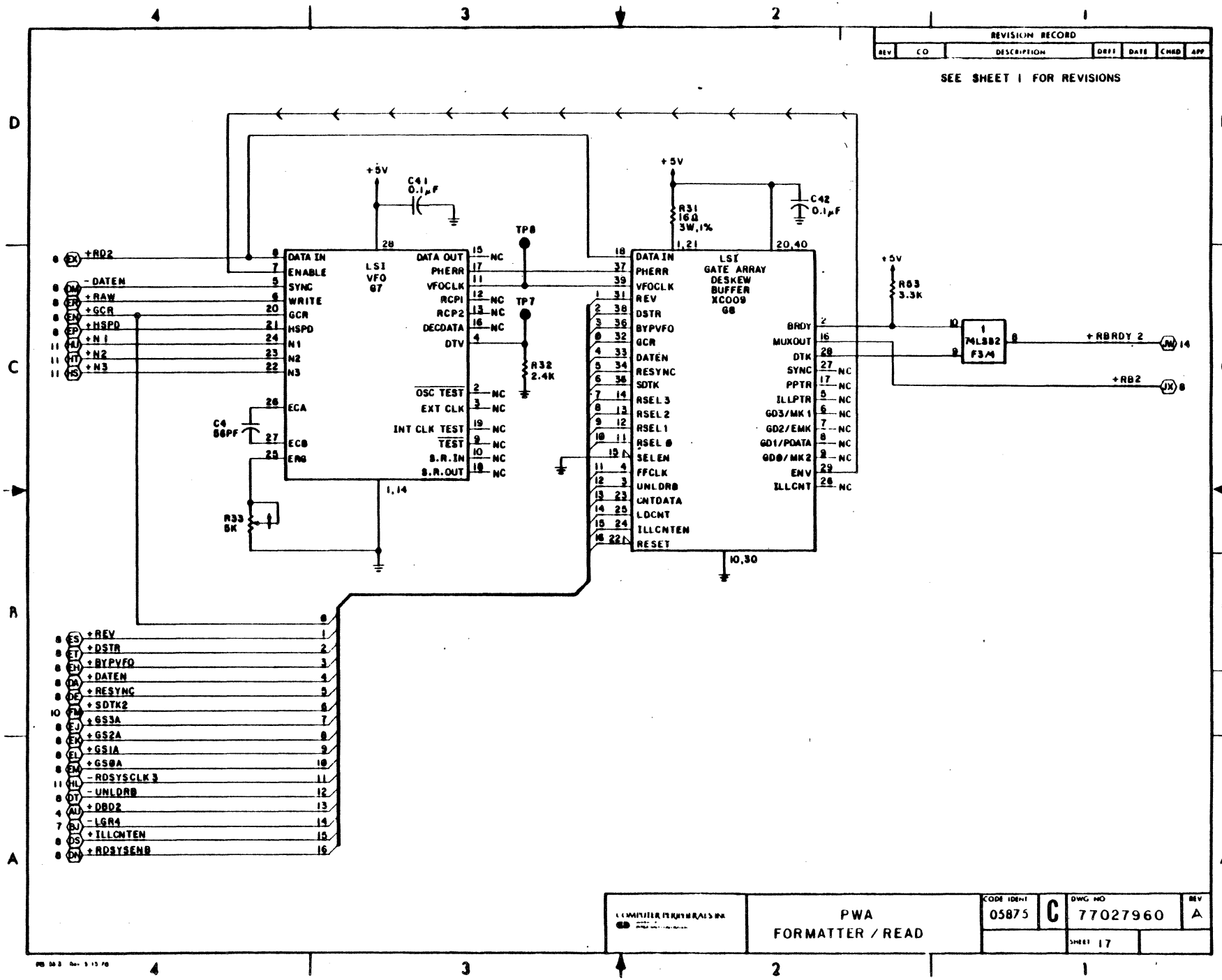
REVISION RECORD
REV
CO
DESCRIPTION
DRFT
DATE
CHKD
APP
SEE SHEET 1 FOR REVISIONS
+5V
C41
0.1µF
C42
0.1µF
R31
160
3W,1%
R83
3.3K
TP8
TP7
R32
2.4K
R33
5K
C4
68PF
LSI
VFO
87
DATA IN
ENABLE
SYNC
WRITE
GCR
HSPD
N1
N2
N3
ECA
ECB
ERG
DATA OUT
PHERR
VFOCLK
RCPI
RCP2
DECDATA
DTV
OSC TEST
EXT CLK
INT CLK TEST
TEST
B.R.IN
B.R.OUT
LSI
GATE ARRAY
DESKEW
BUFFER
XC009
68
DATA IN
PHERR
VFOCLK
REV
DSTR
BYPVFO
GCR
DATEN
RESYNC
SDTK
RSEL 3
RSEL 2
RSEL 1
RSEL 0
SELEN
FFCLK
UNLDRB
CNTDATA
LDCNT
ILLCNTEN
RESET
BRDY
MUXOUT
DTK
SYNC
PPTR
ILLPTR
GD3/MK1
GD2/EMK
GD1/PDATA
GD0/MK2
ENV
ILLCNT
74LS82
F3/4
+RBRDY 2
+RB2
+RD2
-DATEN
+RAW
+GCR
+HSPD
+N1
+N2
+N3
+REV
+DSTR
+BYPVFO
+DATEN
+RESYNC
+SDTK2
+GS3A
+GS2A
+GS1A
+GS0A
-RDSYSCLK3
-UNLDRB
+DBD2
-LGR4
+ILLCNTEN
+RDSYSENB
PWA
FORMATTER / READ
CODE IDENT
05875
C
DWG NO
77027960
REV
A
SHEET 17

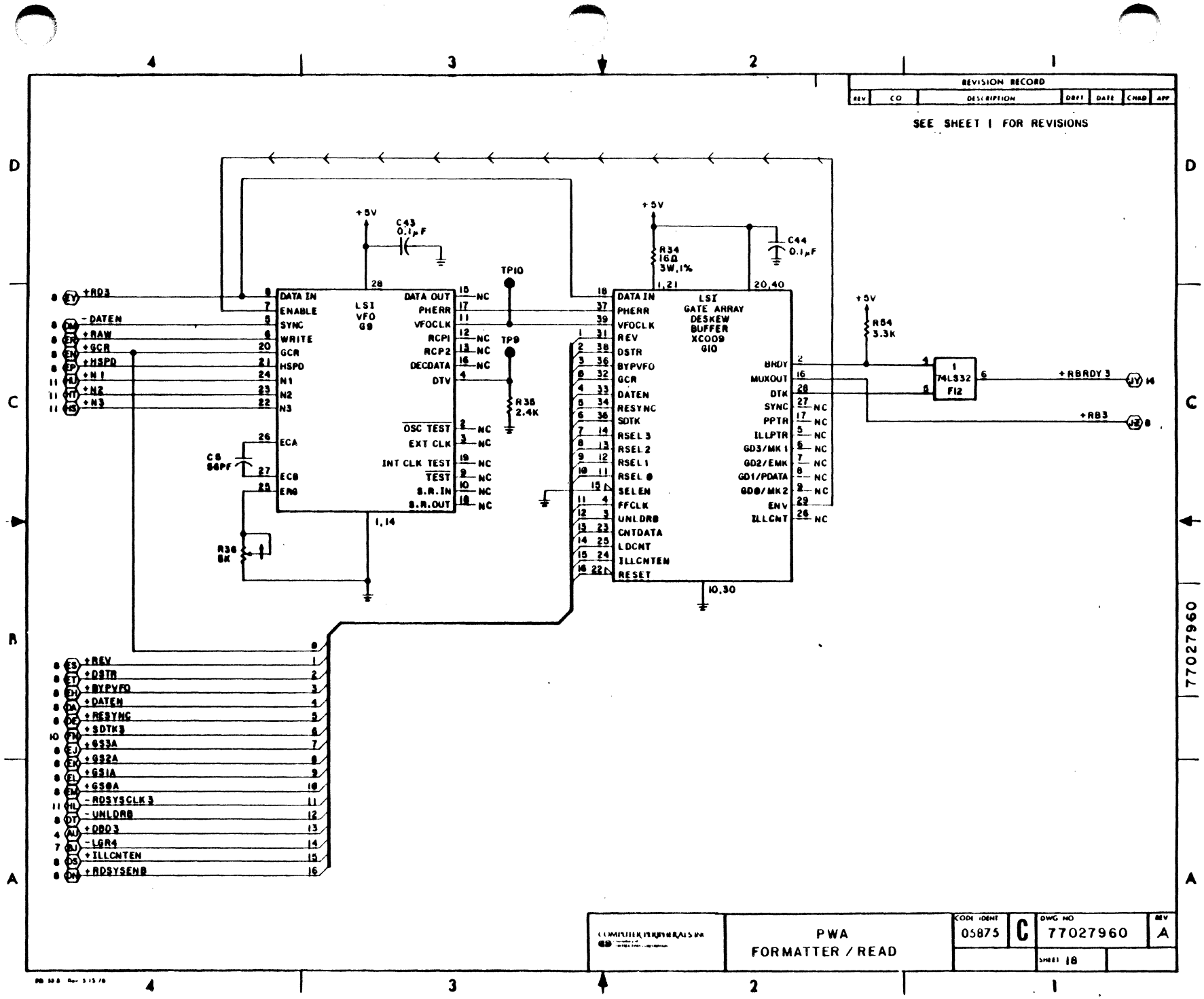
REVISION RECORD
SEE SHEET 1 FOR REVISIONS
+5V
C43 0.1μF
C44 0.1μF
R34 160Ω 3W,1%
R64 3.3K
TP10
TP9
R38 2.4K
C8 56PF
R36 8K
LSI VFO G9
DATA IN
ENABLE
SYNC
WRITE
GCR
HSPD
N1
N2
N3
ECA
ECB
ERR
DATA OUT
PHERR
VFOCLK
RCPI
RCP2
DECDATA
DTV
OSC TEST
EXT CLK
INT CLK TEST
TEST
S.R.IN
S.R.OUT
LSI GATE ARRAY DESKEW BUFFER XC009 G10
DSTR
BYPVFO
DATEN
RESYNC
SDTK
RSEL 3
RSEL 2
RSEL 1
RSEL 0
SELEN
FFCLK
UNLDRB
CNTDATA
LDCNT
ILLCNTEN
RESET
BRDY
MUXOUT
DTK
SYNC
PPTR
ILLPTR
GD3/MK1
GD2/EMK
GD1/PDATA
GD0/MK2
ENV
ILLCNT
74LS32 F12
+RD3
-DATEN
+RAW
+GCR
+HSPD
+N1
+N2
+N3
+RBRDY 3
+RB3
+REV
+DSTR
+BYPVFO
+DATEN
+RESYNC
+SDTK3
+GS3A
+GS2A
+GS1A
+GS0A
-RDSYSCLK3
-UNLDRB
-DB03
-LGR4
+ILLCNTEN
+RDSYSENB
PWA FORMATTER / READ
CODE IDENT 05875
C
DWG NO 77027960
REV A
SHEET 18

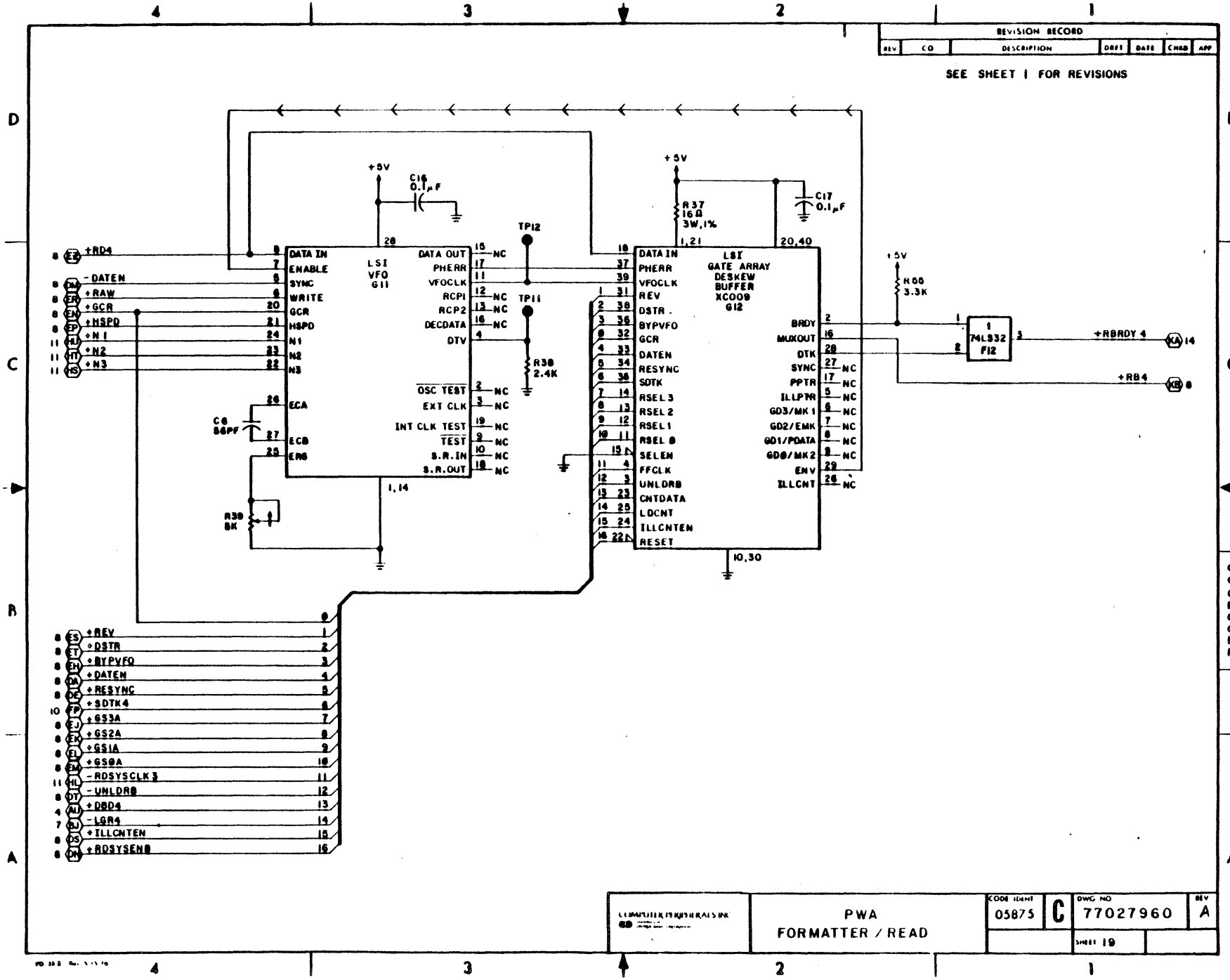
REVISION RECORD
REV
CO
DESCRIPTION
DRFT
DATE
CHKD
APP
SEE SHEET 1 FOR REVISIONS
+5V
C16 0.1µF
C17 0.1µF
R37 16Ω 3W,1%
1,21
20,40
TP12
TP11
R38 2.4K
C6 56PF
R39 8K
R66 3.3K
LSI VFO G11
DATA IN
ENABLE
SYNC
WRITE
GCR
HSPD
N1
N2
N3
ECA
ECB
ERR
DATA OUT
PHERR
VFOCLK
RCP1
RCP2
DECDATA
DTV
OSC TEST
EXT CLK
INT CLK TEST
TEST
S.R.IN
S.R.OUT
1,14
LSI GATE ARRAY DESKEW BUFFER XC009 G12
DATA IN
PHERR
VFOCLK
REV
DSTR .
BYPVFO
GCR
DATEN
RESYNC
SDTK
RSEL 3
RSEL 2
RSEL 1
RSEL 0
SELEN
FFCLK
UNLDRB
CNTDATA
LDCNT
ILLCNTEN
RESET
BRDY
MUXOUT
DTK
SYNC
PPTR
ILLPTR
GD3/MK1
GD2/EMK
GD1/PDATA
GD0/MK2
ENV
ILLCNT
10,30
74LS32 F12
+RD4
-DATEN
+RAW
+GCR
+HSPD
+N1
+N2
+N3
+REV
+DSTR
+BYPVFO
+DATEN
+RESYNC
+SDTK4
+GS3A
+GS2A
+GS1A
+GS0A
-RDSYSCLK3
-UNLDRB
+DBD4
-LGR4
+ILLCNTEN
+RDSYSENB
+RBRDY 4
+RB4
XA 14
XB 8
COMPUTER PERIPHERALS INC
PWA
FORMATTER / READ
CODE IDENT 05875
C
DWG NO 77027960
REV A
SHEET 19

| REVISION RECORD | | | | | | |
|---|---|---|---|---|---|---|
| REV | CO | DESCRIPTION | DRFT | DATE | CHKD | APP |

SEE SHEET 1 FOR REVISIONS

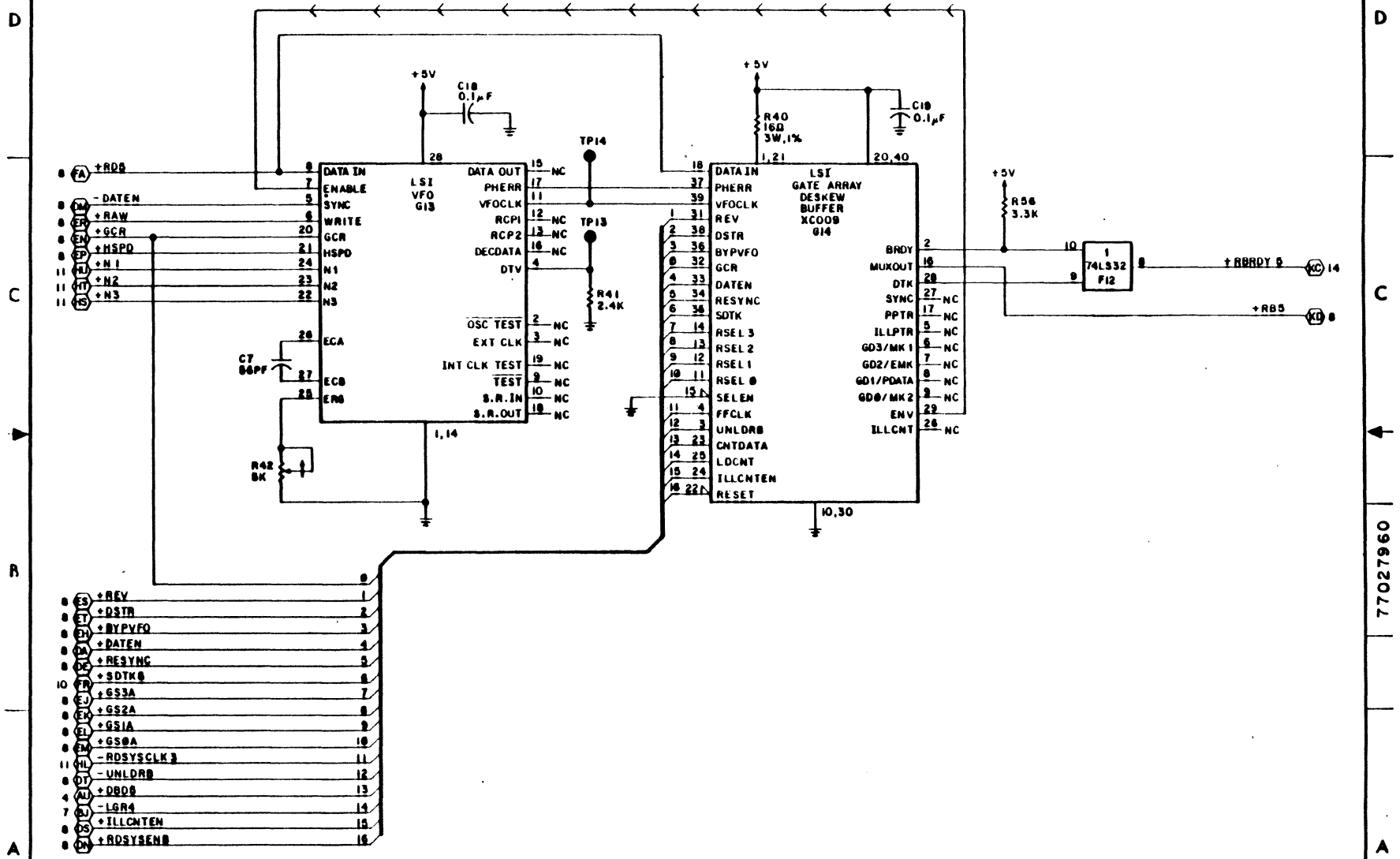


| | | | | |
|---|---|---|---|---|
| COMPUTER PERIPHERALS INC. | PWA FORMATTER / READ | CODE IDENT 05875 | C | DWG NO 77027960 REV A |
| | | | | SHEET 20 |

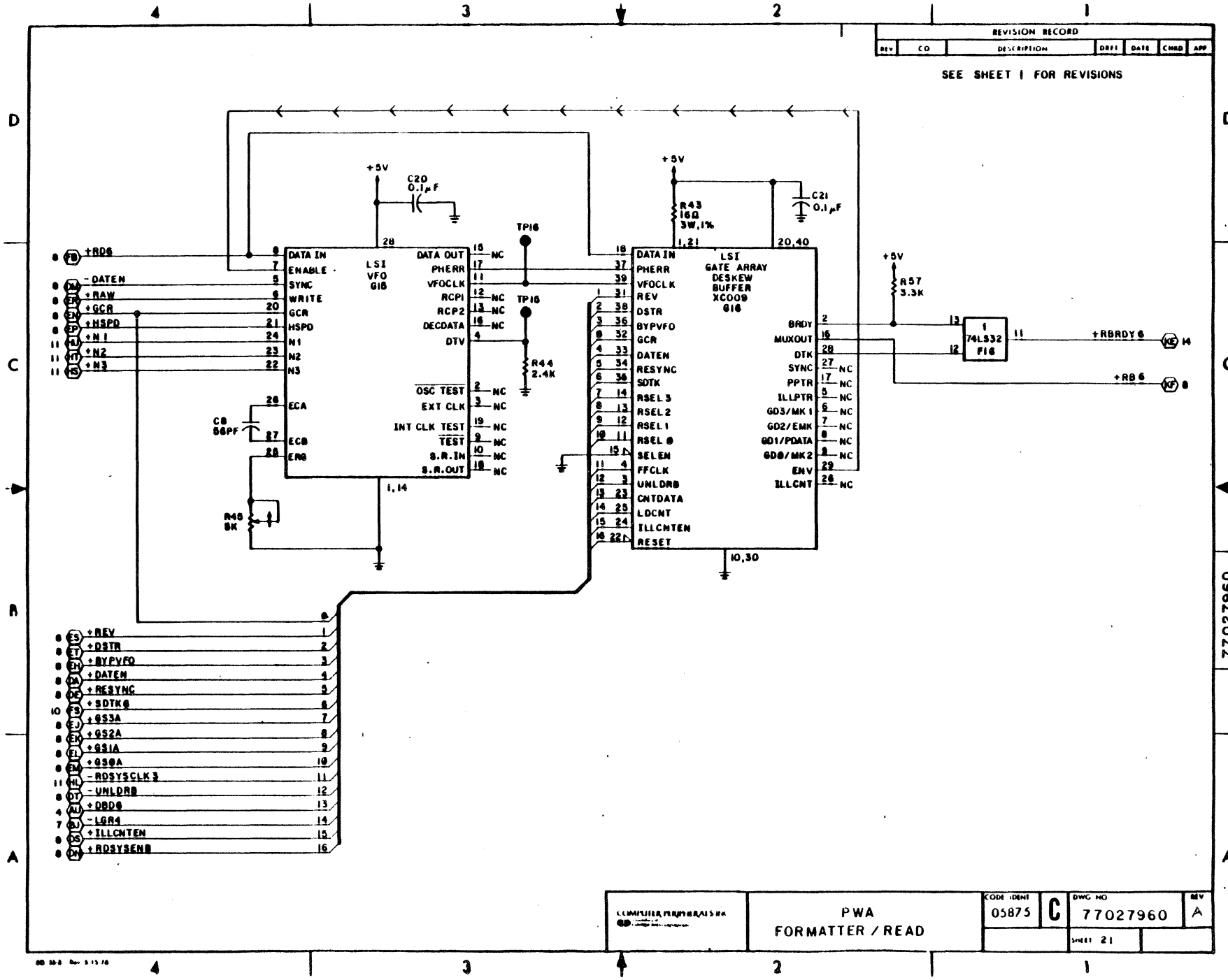
REVISION RECORD
REV
CO
DESCRIPTION
DRFT
DATE
CHKD
APP
SEE SHEET 1 FOR REVISIONS
+5V
C20
0.1μF
C21
0.1μF
R43
16Ω
3W,1%
R57
3.3K
TP16
TP16
R44
2.4K
R45
8K
C8
68PF
LSI
VFO
G18
DATA IN
ENABLE
SYNC
WRITE
GCR
HSPD
N1
N2
N3
ECA
ECB
ERG
DATA OUT
PHERR
VFOCLK
RCP1
RCP2
DECDATA
DTV
OSC TEST
EXT CLK
INT CLK TEST
TEST
S.R.IN
S.R.OUT
LSI
GATE ARRAY
DESKEW
BUFFER
XC009
G16
DATA IN
PHERR
VFOCLK
REV
DSTR
BYPVFO
GCR
DATEN
RESYNC
SDTK
RSEL3
RSEL2
RSEL1
RSEL0
SELEN
FFCLK
UNLDRB
CNTDATA
LDCNT
ILLCNTEN
RESET
BRDY
MUXOUT
DTK
SYNC
PPTR
ILLPTR
GD3/MK1
GD2/EMK
GD1/PDATA
GD0/MK2
ENV
ILLCNT
74LS32
F16
+RDG
-DATEN
+RAW
+GCR
+HSPD
+N1
+N2
+N3
+REV
+DSTR
+BYPVFO
+DATEN
+RESYNC
+SDTKG
+GS3A
+GS2A
+GS1A
+GS0A
-RDSYSCLK3
-UNLDRB
+DBDG
-LGR4
+ILLCNTEN
+RDSYSENB
+RBRDYG
+RBG
COMPUTER PERIPHERALS INC.
PWA
FORMATTER / READ
CODE IDENT
05875
C
DWG NO
77027960
REV
A
SHEET 21

| REVISION RECORD | | | | | | |
|---|---|---|---|---|---|---|
| REV | CO | DESCRIPTION | DRFT | DATE | CHKD | APP |

SEE SHEET 1 FOR REVISIONS

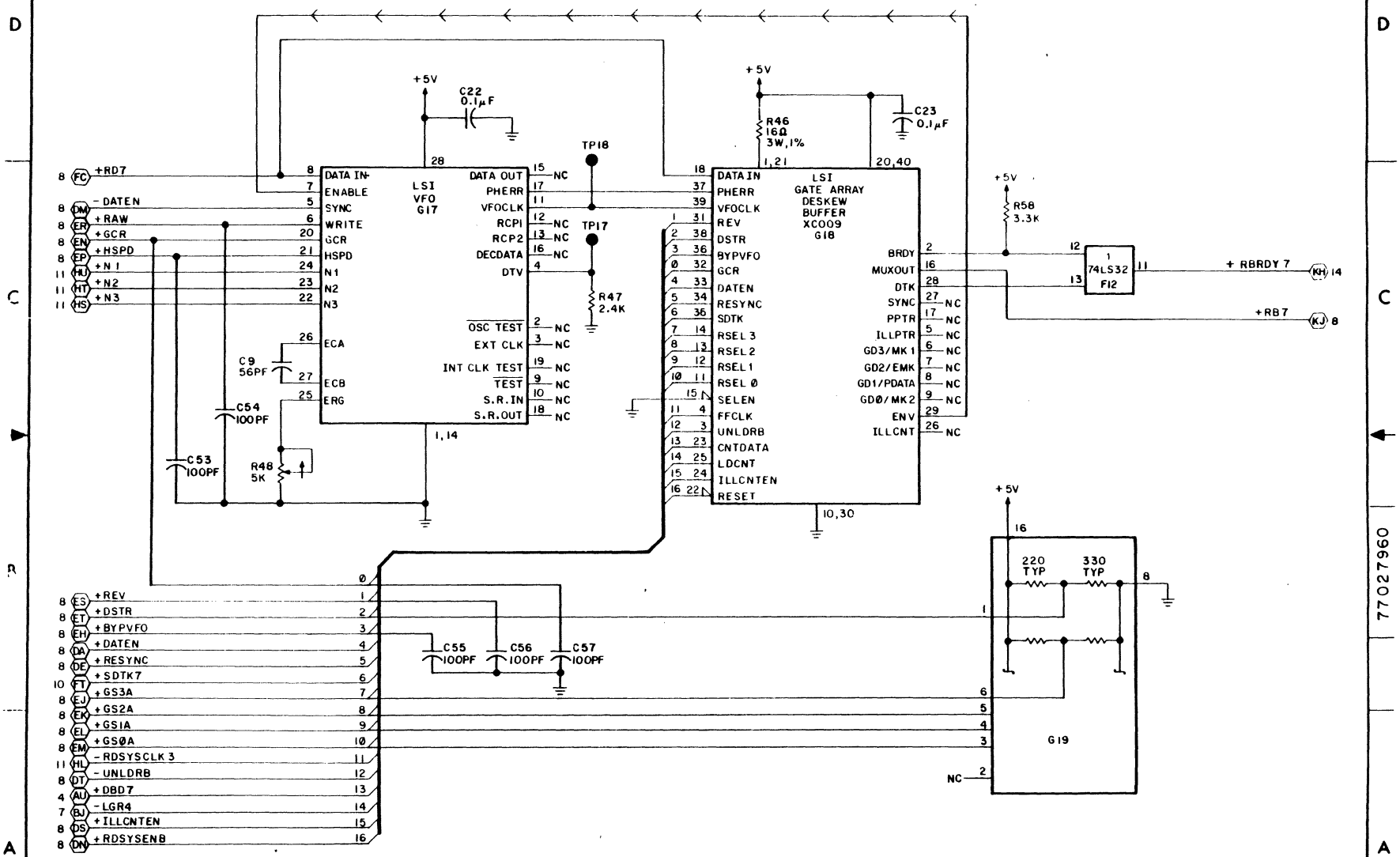


| | | | | |
|---|---|---|---|---|
| COMPUTER PERIPHERALS, Inc. | PWA FORMATTER / READ | CODE IDENT 05875 | C | DWG NO 77027960 REV D |
| | | | | SHEET 22 |

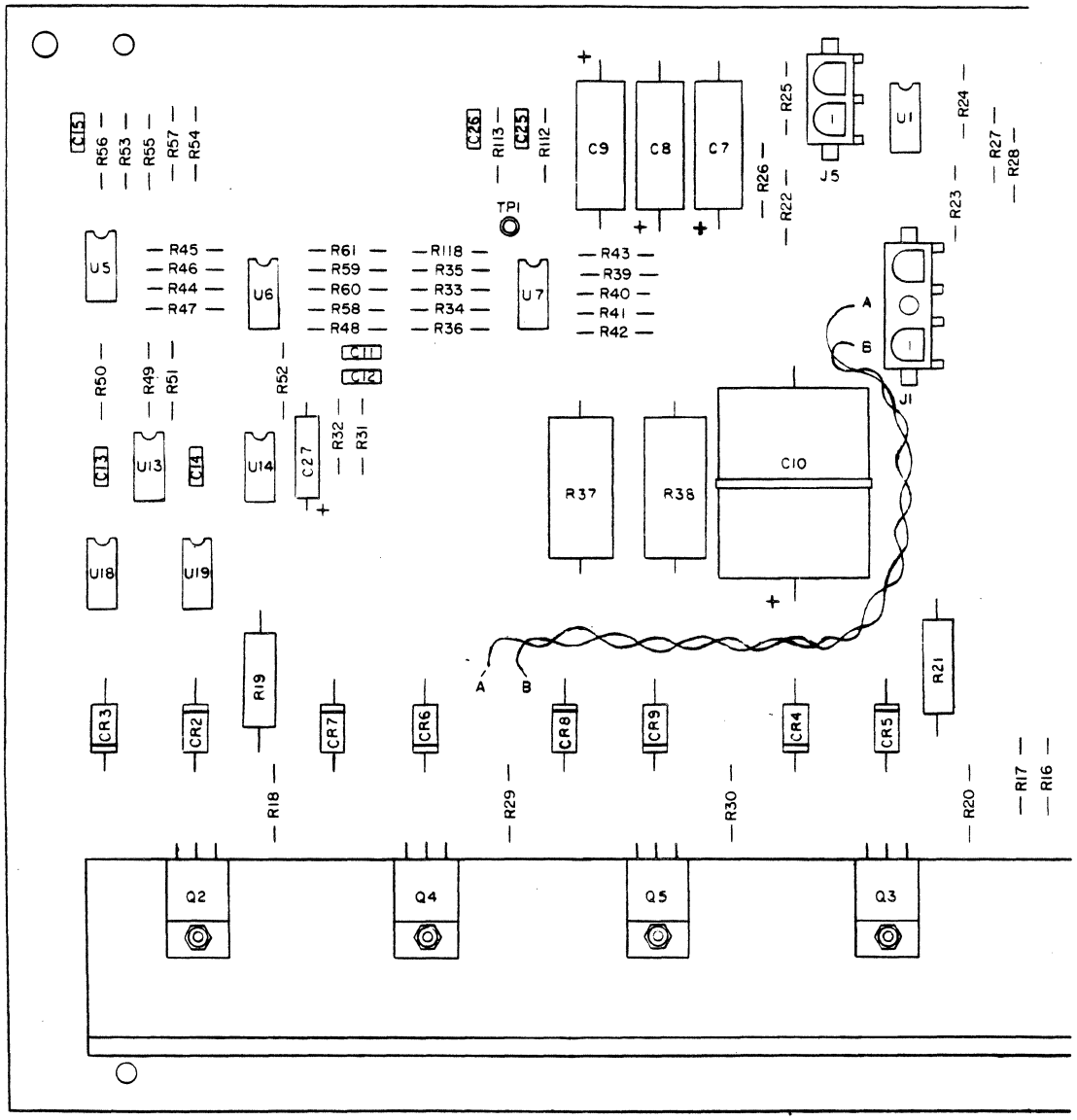


POWER DRIVER PWA

SHEET 1B

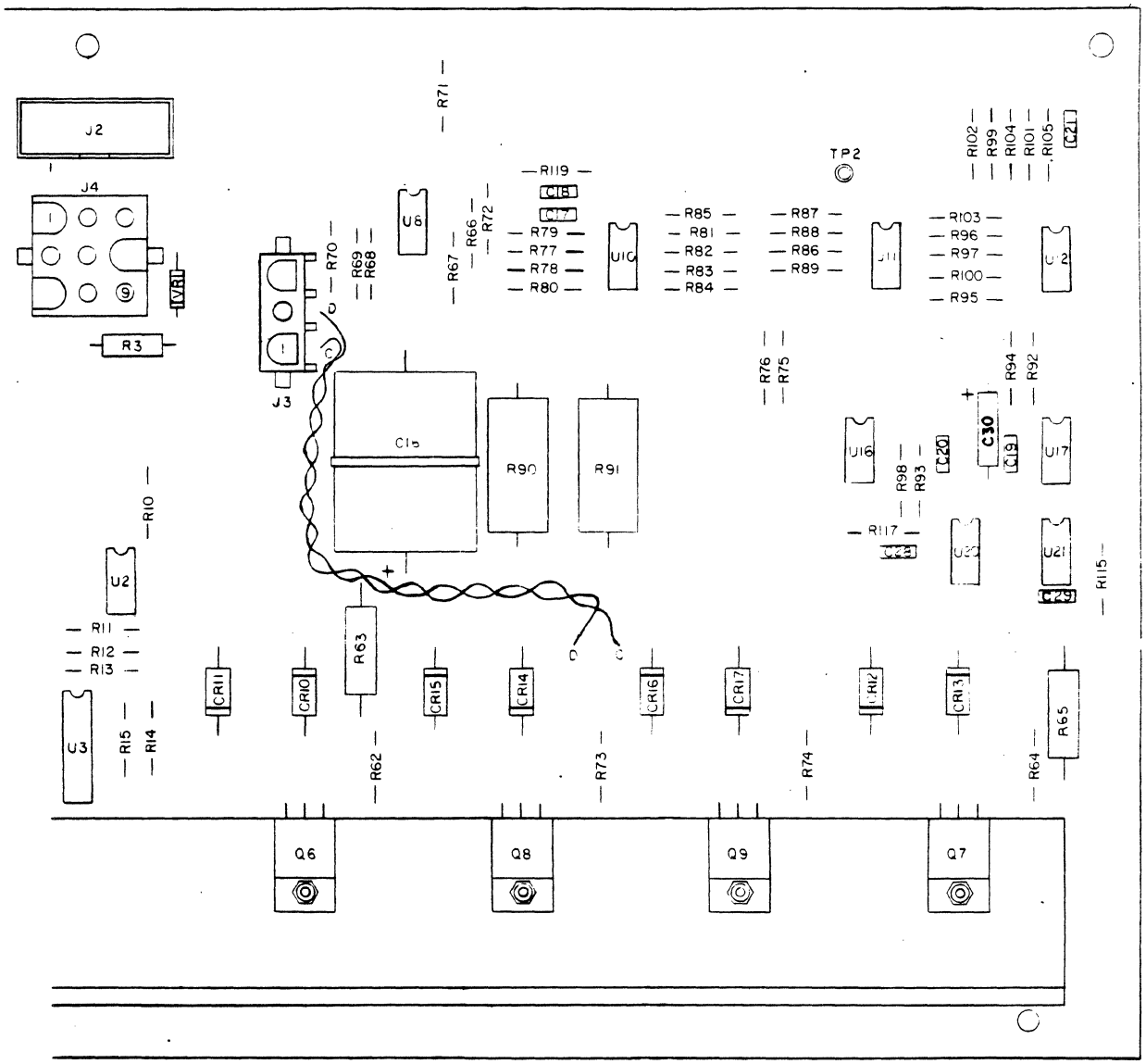


POWER DRIVER PWA

SHEET 1A

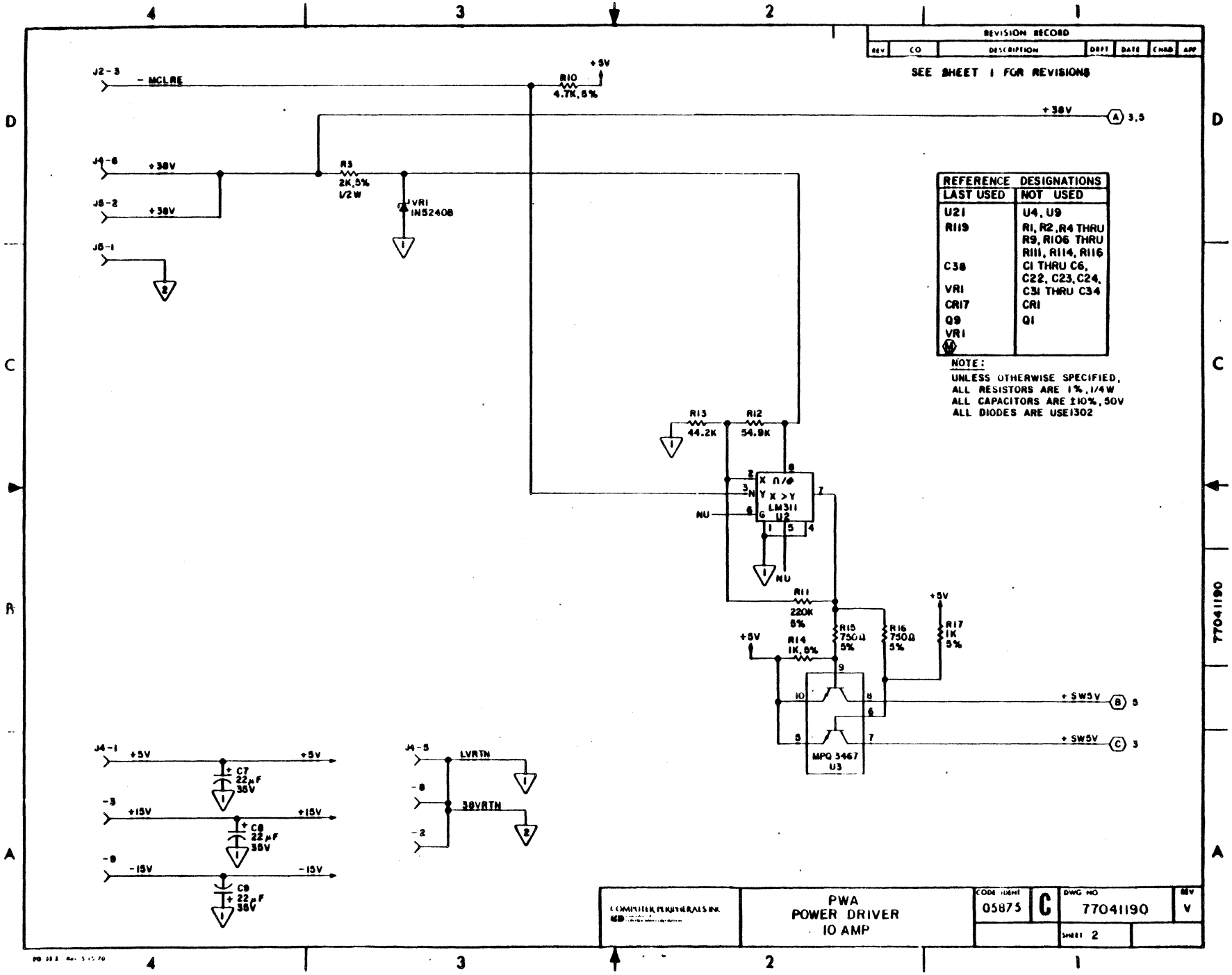
REVISION RECORD
REV | CO | DESCRIPTION | DRFT | DATE | CHKD | APP
SEE SHEET 1 FOR REVISIONS
J2-3 - MCLRE
R10 4.7K, 5%
+5V
+38V
J4-6 +38V
J8-2 +38V
J8-1
R3 2K, 5% 1/2W
VR1 IN5240B
REFERENCE DESIGNATIONS
LAST USED | NOT USED
U21 | U4, U9
R119 | R1, R2, R4 THRU R9, R106 THRU R111, R114, R116
C38 | C1 THRU C6, C22, C23, C24, C31 THRU C34
VR1 | CR1
CR17 | Q1
Q9
VR1
NOTE:
UNLESS OTHERWISE SPECIFIED,
ALL RESISTORS ARE 1%, 1/4W
ALL CAPACITORS ARE ±10%, 50V
ALL DIODES ARE USE1302
R13 44.2K
R12 54.9K
LM311 U2
NU
R11 220K 5%
R15 750Ω 5%
R16 750Ω 5%
R17 1K 5%
R14 1K, 5%
MPQ 3467 U3
+SW5V
J4-1 +5V
C7 22µF 35V
-3 +15V
C8 22µF 35V
-8 -15V
C9 22µF 35V
J4-5 LVRTN
-8
38VRTN
-2
PWA
POWER DRIVER
10 AMP
CODE IDENT 05875
C
DWG NO 77041190
REV V
SHEET 2

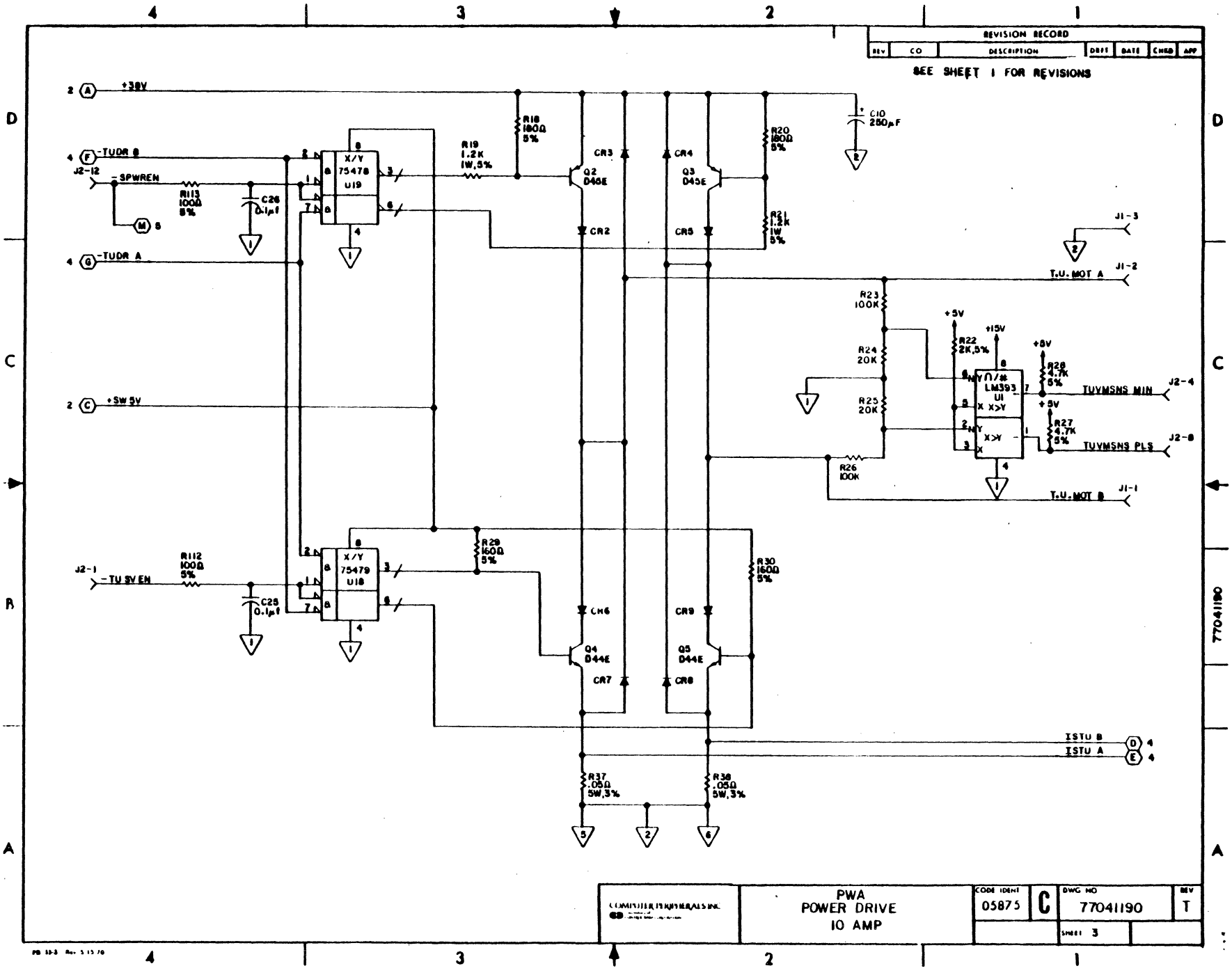
REVISION RECORD
REV
CO
DESCRIPTION
DRFT
DATE
CHKD
APP
SEE SHEET 1 FOR REVISIONS
+38V
-TUDR B
J2-12
-SPWREN
-TUDR A
+SW 5V
J2-1
-TU SV EN
X/Y 75478 U19
X/Y 75479 U18
R113 100Ω 5%
R112 100Ω 5%
C26 0.1μf
C25 0.1μf
R18 180Ω 5%
R19 1.2K 1W,5%
R20 180Ω 5%
R21 1.2K 1W 5%
C10 250μF
Q2 D45E
Q3 D45E
Q4 D44E
Q5 D44E
CR2
CR3
CR4
CR5
CR6
CR7
CR8
CR9
R29 160Ω 5%
R30 160Ω 5%
R37 .05Ω 5W,5%
R38 .05Ω 5W,5%
R23 100K
R24 20K
R25 20K
R26 100K
R22 2K,5%
R28 4.7K 5%
R27 4.7K 5%
+5V
+15V
LM393 U1
J1-3
T.U. MOT A
J1-2
T.U. MOT B
J1-1
TUVMSNS MIN
J2-4
TUVMSNS PLS
J2-8
ISTU B
ISTU A
PWA
POWER DRIVE
10 AMP
CODE IDENT
05875
DWG NO
77041190
REV
T
SHEET 3
77041190

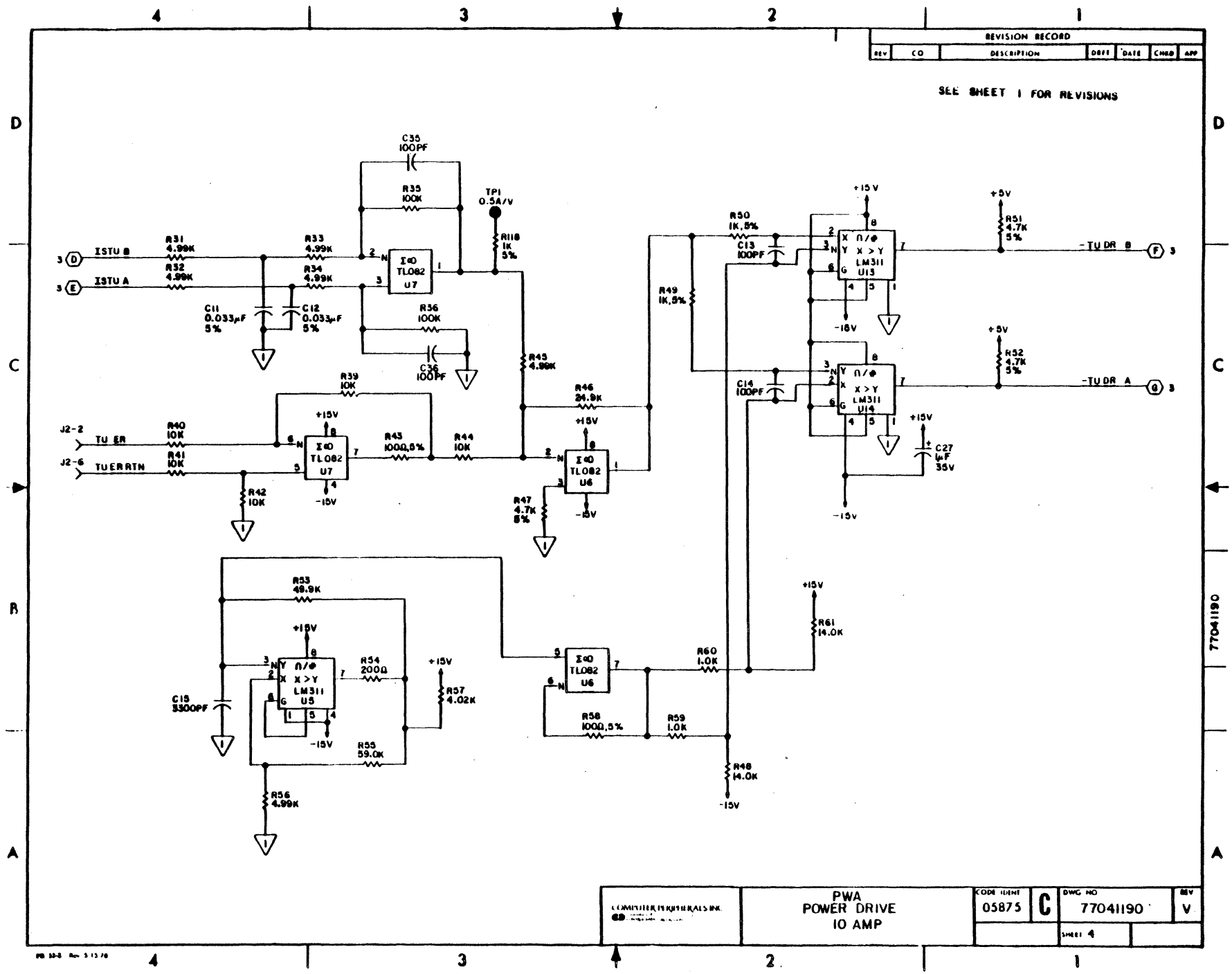
REVISION RECORD
REV
CO
DESCRIPTION
DRFT
DATE
CHKD
APP
SEE SHEET 1 FOR REVISIONS
ISTU B
ISTU A
TU ER
TU ER RTN
J2-2
J2-6
-TU DR B
-TU DR A
TP1
0.5A/V
TL082
U7
U6
LM311
U13
U14
U5
+15V
-15V
+5V
C35
100PF
R35
100K
R118
1K
5%
R31
4.99K
R32
4.99K
R33
4.99K
R34
4.99K
C11
0.033μF
5%
C12
0.033μF
5%
R36
100K
C36
100PF
R45
4.99K
R39
10K
R40
10K
R41
10K
R42
10K
R43
100Ω,5%
R44
10K
R46
24.9K
R47
4.7K
5%
R49
1K,5%
R50
1K,5%
C13
100PF
C14
100PF
R51
4.7K
5%
R52
4.7K
5%
C27
1μF
35V
R53
49.9K
R54
200Ω
R55
59.0K
R56
4.99K
C15
3300PF
R57
4.02K
R58
100Ω,5%
R59
1.0K
R60
1.0K
R61
14.0K
R48
14.0K
COMPUTER PERIPHERALS INC.
PWA
POWER DRIVE
10 AMP
CODE IDENT
05875
C
DWG NO
77041190
REV
V
SHEET 4
77041190

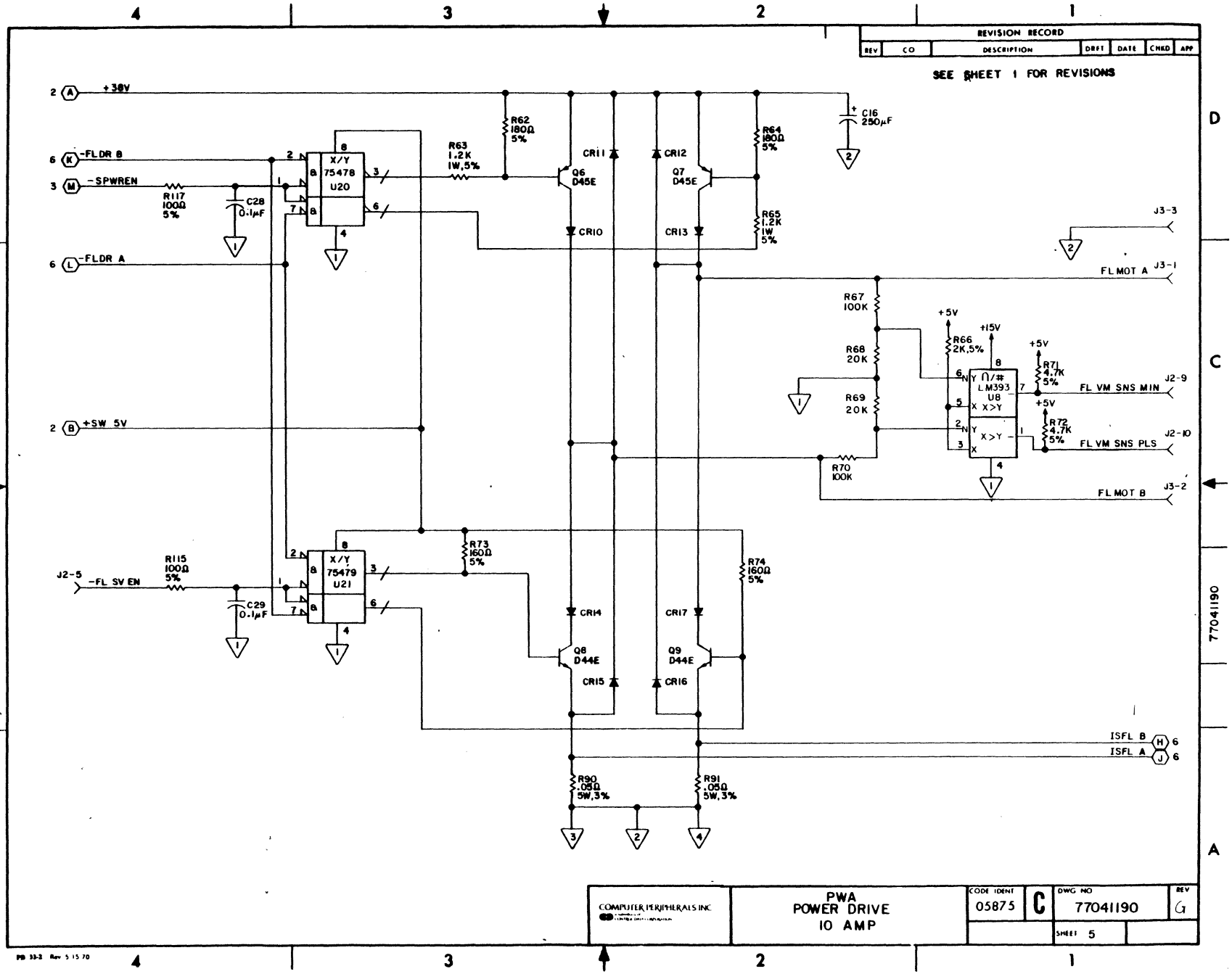
REVISION RECORD
REV | CO | DESCRIPTION | DRFT | DATE | CHKD | APP
SEE SHEET 1 FOR REVISIONS
+38V
-FLDR B
-SPWREN
-FLDR A
+SW 5V
J2-5 -FL SV EN
R117 100Ω 5%
C28 0.1μF
R115 100Ω 5%
C29 0.1μF
X/Y 75478 U20
X/Y 75479 U21
R62 180Ω 5%
R63 1.2K 1W,5%
R64 180Ω 5%
R65 1.2K 1W 5%
C16 250μF
CR11
CR12
CR10
CR13
Q6 D45E
Q7 D45E
R73 160Ω 5%
R74 160Ω 5%
CR14
CR17
CR15
CR16
Q8 D44E
Q9 D44E
R90 .05Ω 5W,3%
R91 .05Ω 5W,3%
R67 100K
R68 20K
R69 20K
R70 100K
R66 2K,5%
R71 4.7K 5%
R72 4.7K 5%
LM393 U8
+5V
+15V
J3-3
FL MOT A J3-1
FL MOT B J3-2
FL VM SNS MIN J2-9
FL VM SNS PLS J2-10
ISFL B
ISFL A
COMPUTER PERIPHERALS INC
PWA
POWER DRIVE
10 AMP
CODE IDENT 05875
C
DWG NO 77041190
REV G
SHEET 5

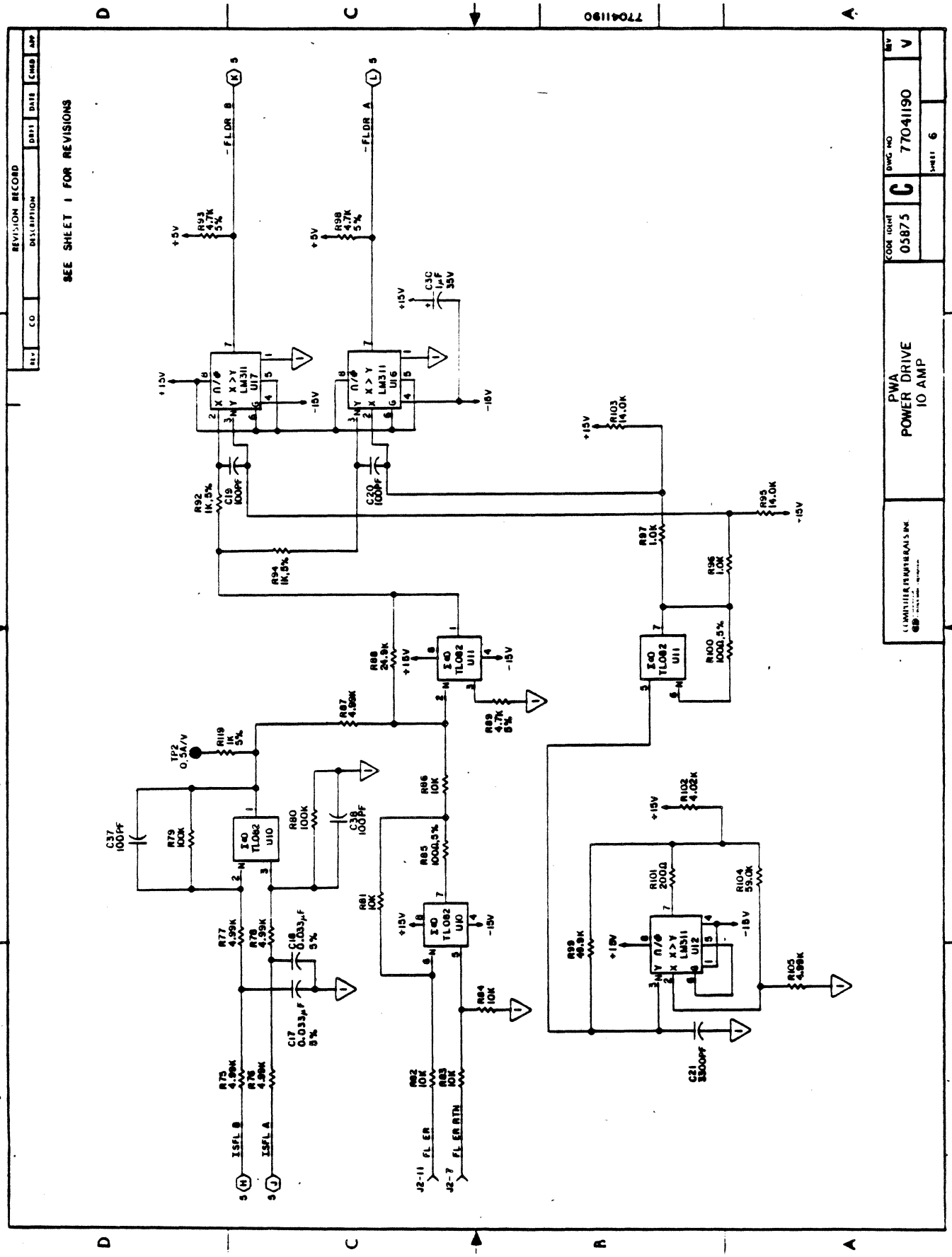
REVISION RECORD
SEE SHEET 1 FOR REVISIONS
PWA
POWER DRIVE
10 AMP
CODE IDENT 05875
C
DWG NO 77041190
SHEET 6
REV V
77041190
-FLDR B
-FLDR A
ISFL B
ISFL A
FL ER
FL ER RTN
J2-11
J2-7
TP2 0.5A/V
LM311 U17
LM311 U16
LM311 U12
TL082 U10
TL082 U11
TL082 U11
TL082 U10
TL082 U10
+5V
+15V
-15V

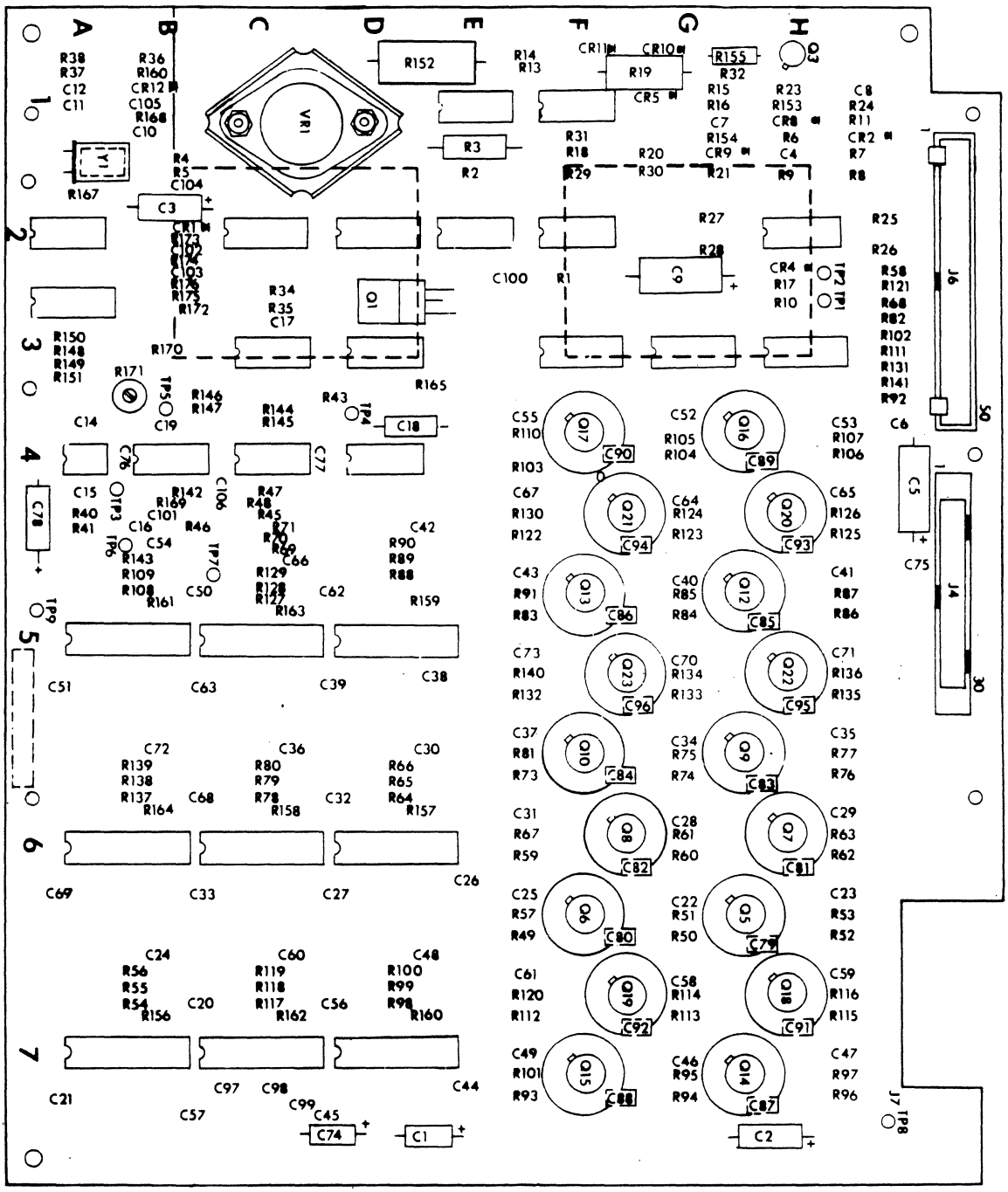

WRITE DRIVER PWA

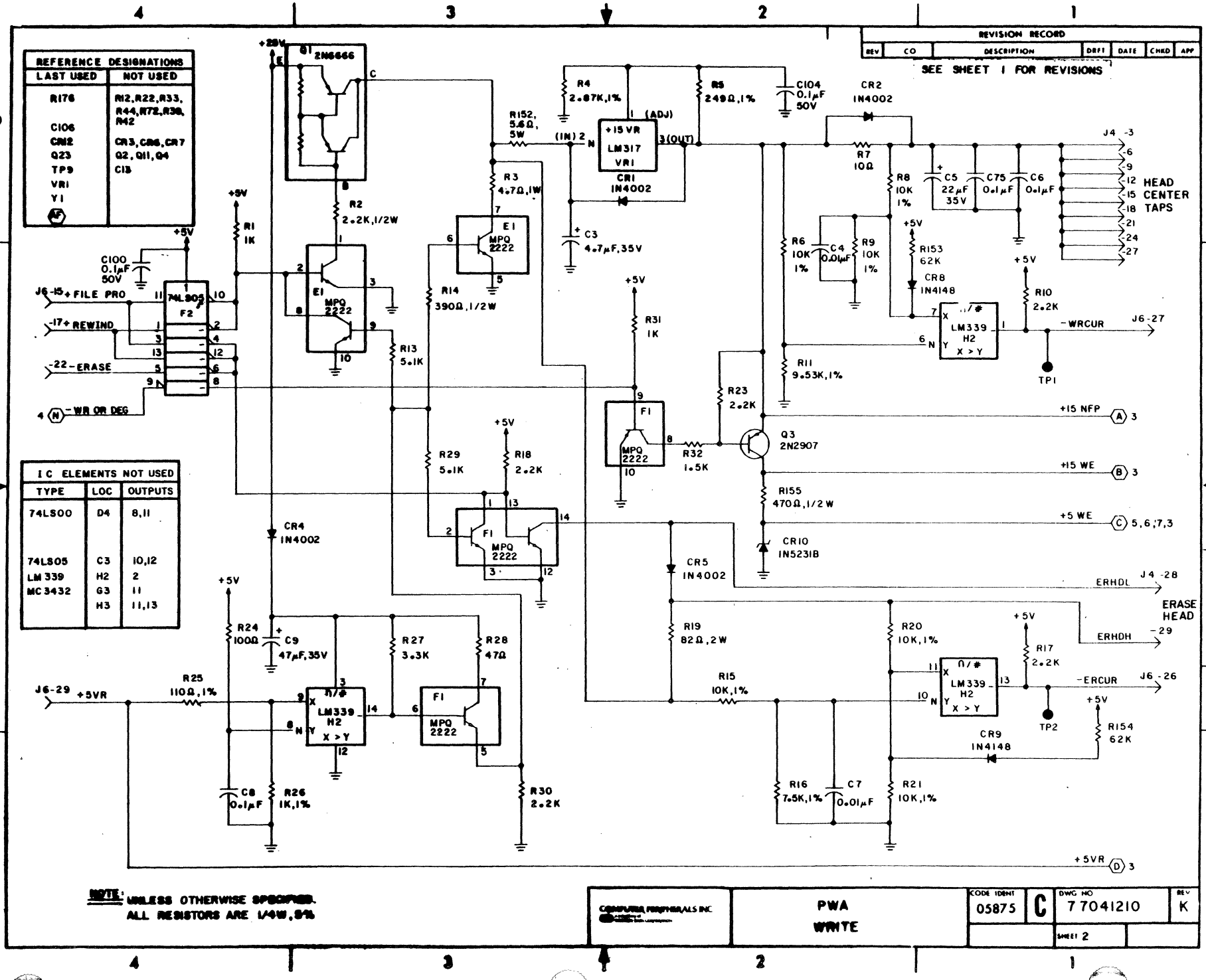
REFERENCE DESIGNATIONS
LAST USED: R176, C106, CR12, Q23, TP9, VR1, Y1
NOT USED: R12,R22,R33, R44,R72,R38, R42, CR3,CR6,CR7, Q2,Q11,Q4, C13
IC ELEMENTS NOT USED
TYPE / LOC / OUTPUTS
74LS00 D4 8,11
74LS05 C3 10,12
LM 339 H2 2
MC 3432 G3 11
H3 11,13
REVISION RECORD
REV CO DESCRIPTION DRFT DATE CHKD APP
SEE SHEET 1 FOR REVISIONS
+29V
Q1 2N6666
R2 2.2K,1/2W
R1 1K
C100 0.1µF 50V
J6-15 + FILE PRO
-17+ REWIND
-22- ERASE
4 N - WR OR DEG
74LS05 F2
E1 MPQ 2222
R3 4.7Ω,1W
R14 390Ω,1/2W
R13 5.1K
R4 2.87K,1%
R5 249Ω,1%
C104 0.1µF 50V
CR2 IN4002
R152, 5.6Ω, 5W
+15 VR LM317 VR1
CR1 IN4002
C3 4.7µF,35V
R7 10Ω
R8 10K 1%
C5 22µF 35V
C75 0.1µF
C6 0.1µF
J4 -3 -6 -9 -12 -15 -18 -21 -24 -27 HEAD CENTER TAPS
R6 10K 1%
C4 0.01µF
R9 10K 1%
R153 62K
CR8 IN4148
R10 2.2K
LM339 H2 X > Y
-WRCUR J6-27
TP1
R11 9.53K,1%
R31 1K
R23 2.2K
F1 MPQ 2222
R32 1.5K
Q3 2N2907
+15 NFP A 3
+15 WE B 3
R155 470Ω,1/2W
+5 WE C 5,6,7,3
CR10 IN5231B
R29 5.1K
R18 2.2K
CR4 IN4002
CR5 IN4002
ERHDL J4-28
ERASE HEAD
ERHDH -29
R19 82Ω,2W
R15 10K,1%
R20 10K,1%
R17 2.2K
-ERCUR J6-26
TP2
R154 62K
CR9 IN4148
R16 7.5K,1%
C7 0.01µF
R21 10K,1%
R24 100Ω
C9 47µF,35V
R27 3.3K
R28 47Ω
J6-29 +5VR
R25 110Ω,1%
C8 0.1µF
R26 1K,1%
R30 2.2K
+5VR D 3
NOTE: UNLESS OTHERWISE SPECIFIED, ALL RESISTORS ARE 1/4W, 5%
COMPUTER PERIPHERALS INC
PWA WRITE
CODE IDENT 05875
C
DWG NO 77041210
REV K
SHEET 2
77041210

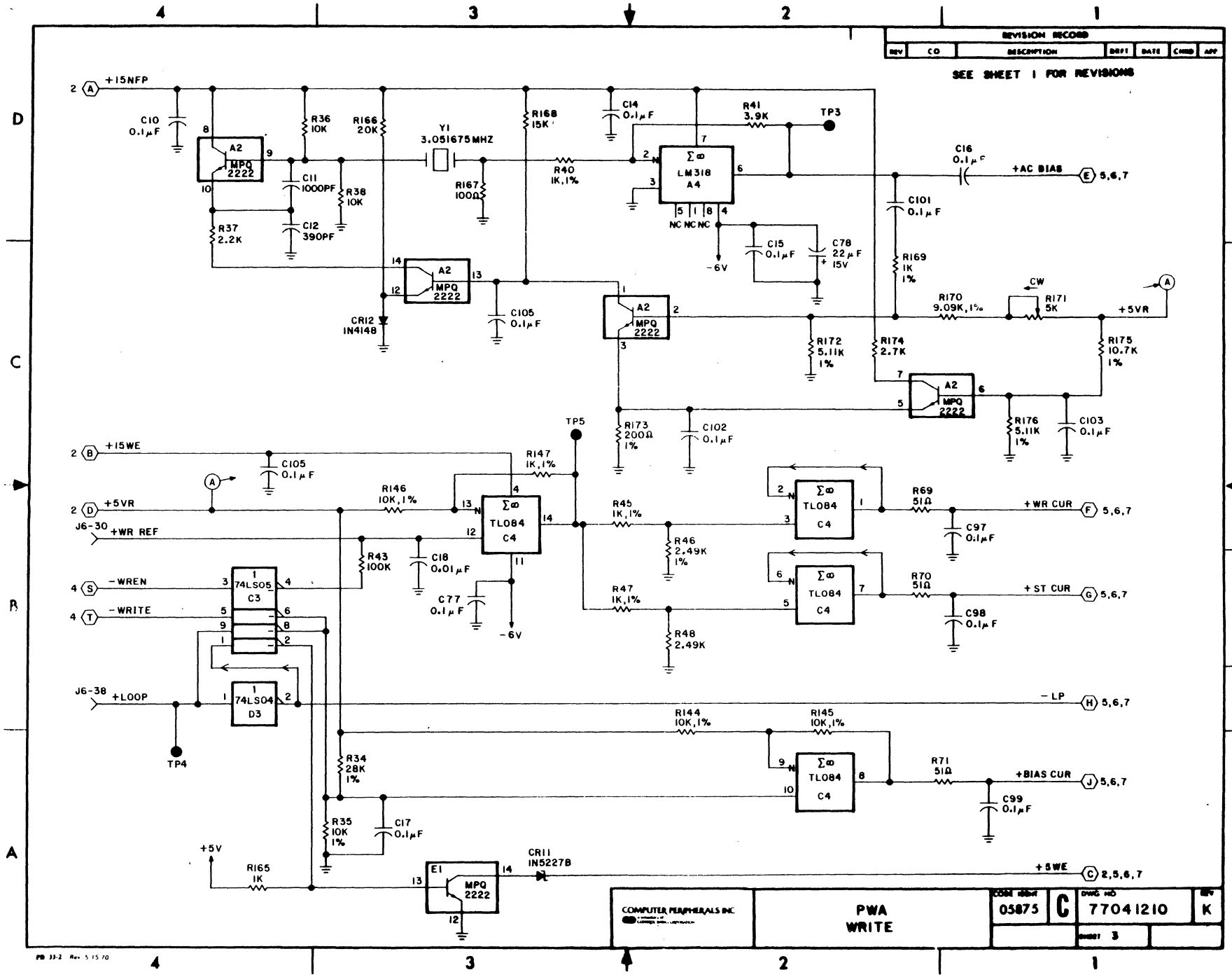
REVISION RECORD
REV
CO
DESCRIPTION
DRFT
DATE
CHKD
APP
SEE SHEET 1 FOR REVISIONS
+15NFP
C10 0.1µF
A2 MPQ 2222
R36 10K
R166 20K
Y1 3.051675MHZ
R168 15K
C14 0.1µF
R41 3.9K
TP3
C16 0.1µF
+AC BIAS
E 5,6,7
R40 1K,1%
Σ∞ LM318 A4
C101 0.1µF
R169 1K 1%
C11 1000PF
R38 10K
R37 2.2K
C12 390PF
R167 100Ω
NC NC NC
-6V
C15 0.1µF
C78 22µF 15V
CW
R171 5K
R170 9.09K,1%
+5VR
A
CR12 IN4148
C105 0.1µF
R172 5.11K 1%
R174 2.7K
R175 10.7K 1%
R176 5.11K 1%
C103 0.1µF
R173 200Ω 1%
C102 0.1µF
TP5
+15WE
R147 1K,1%
R146 10K,1%
+5VR
J6-30 +WR REF
R43 100K
C18 0.01µF
C77 0.1µF
TL084 C4
R45 1K,1%
R46 2.49K 1%
R47 1K,1%
R48 2.49K
R69 51Ω
+WR CUR
F 5,6,7
C97 0.1µF
R70 51Ω
+ST CUR
G 5,6,7
C98 0.1µF
-WREN
-WRITE
74LS05 C3
J6-38 +LOOP
74LS04 D3
TP4
-LP
H 5,6,7
R144 10K,1%
R145 10K,1%
R71 51Ω
+BIAS CUR
J 5,6,7
C99 0.1µF
R34 28K 1%
R35 10K 1%
C17 0.1µF
+5V
R165 1K
E1 MPQ 2222
CR11 IN5227B
+5WE
C 2,5,6,7
COMPUTER PERIPHERALS INC
PWA WRITE
CODE IDENT 05875
C
DWG NO 77041210
REV K
SHEET 3
PD 33-2 Rev 5.15.70

77041210

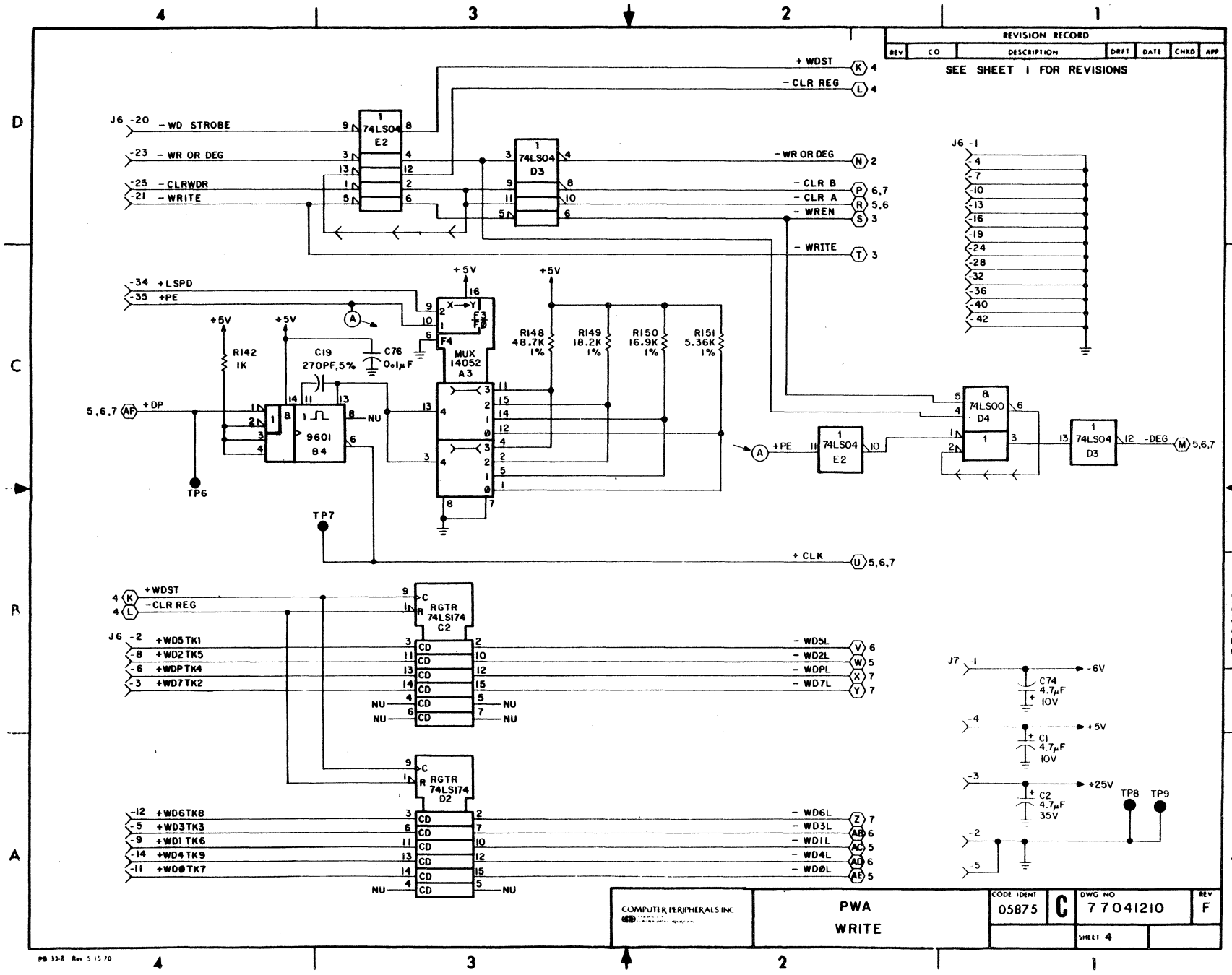
REVISION RECORD
REV | CO | DESCRIPTION | DRFT | DATE | CHKD | APP
SEE SHEET 1 FOR REVISIONS
+ WDST
- CLR REG
J6 -20 - WD STROBE
-23 - WR OR DEG
-25 - CLRWDR
-21 - WRITE
74LS04 E2
74LS04 D3
- WR OR DEG
- CLR B
- CLR A
- WREN
- WRITE
J6 -1
-4
-7
-10
-13
-16
-19
-24
-28
-32
-36
-40
-42
-34 +LSPD
-35 +PE
+5V
R142 1K
C19 270PF,5%
C76 0.1μF
MUX 14052 A3
R148 48.7K 1%
R149 18.2K 1%
R150 16.9K 1%
R151 5.36K 1%
5,6,7 +DP
9601 B4
TP6
TP7
74LS00 D4
74LS04 E2
74LS04 D3
+PE
-DEG
+ CLK
RGTR 74LS174 C2
RGTR 74LS174 D2
+WDST
-CLR REG
+WD5TK1
+WD2TK5
+WDPTK4
+WD7TK2
+WD6TK8
+WD3TK3
+WD1TK6
+WD4TK9
+WD0TK7
- WD5L
- WD2L
- WDPL
- WD7L
- WD6L
- WD3L
- WD1L
- WD4L
- WD0L
NU
J7 -1
-6V
C74 4.7μF 10V
-4
+5V
C1 4.7μF 10V
-3
+25V
C2 4.7μF 35V
TP8
TP9
-2
-5
COMPUTER PERIPHERALS INC.
PWA
WRITE
CODE IDENT 05875
C
DWG NO 77041210
REV F
SHEET 4
PB 33-2 Rev 5 15 70

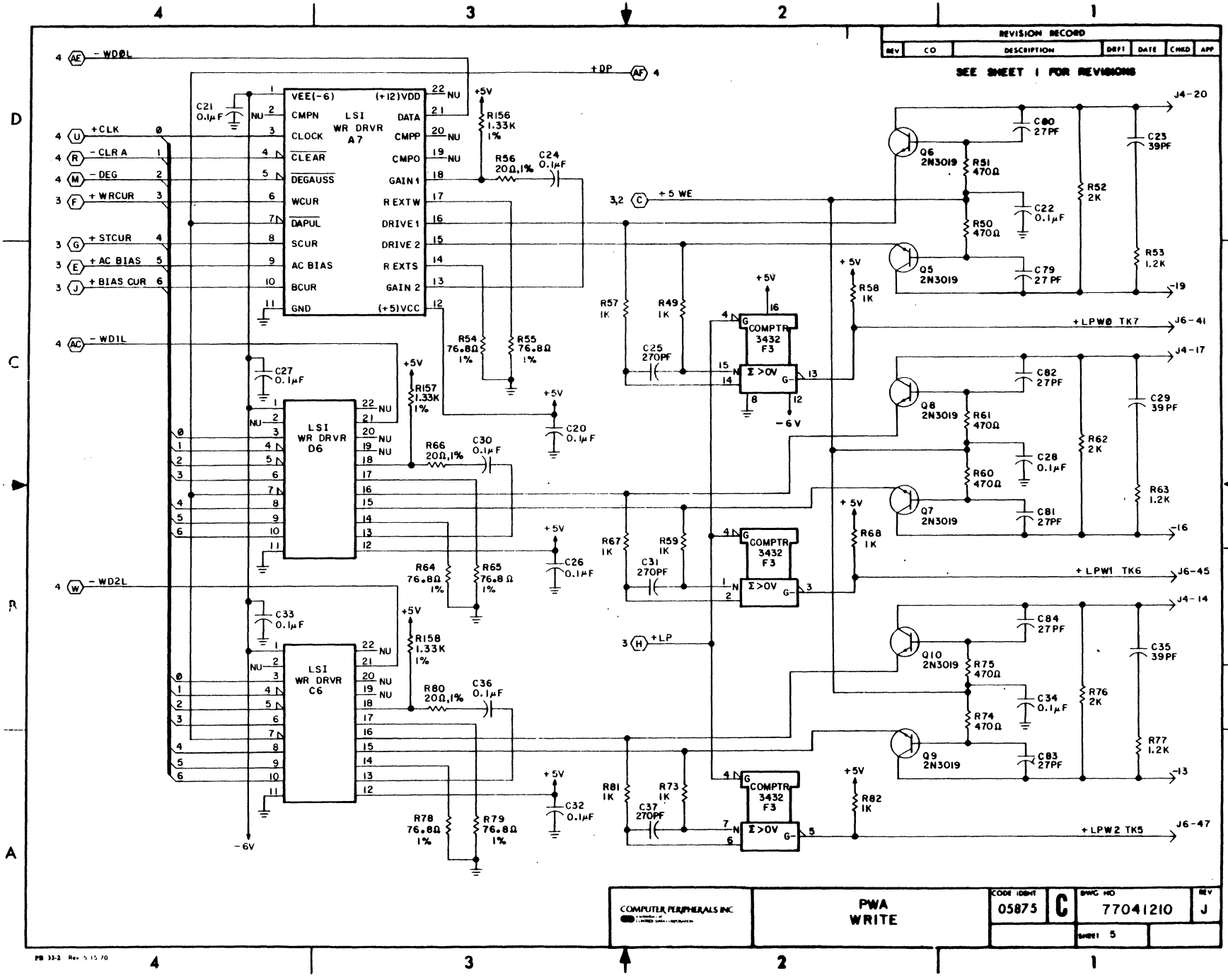
REVISION RECORD
REV | CO | DESCRIPTION | DRFT | DATE | CHKD | APP
SEE SHEET 1 FOR REVISIONS
LSI WR DRVR A7
LSI WR DRVR D6
LSI WR DRVR C6
VEE(-6)
(+12)VDD
CMPN
DATA
CLOCK
CMPP
CLEAR
CMPO
DEGAUSS
GAIN 1
WCUR
R EXTW
DAPUL
DRIVE 1
SCUR
DRIVE 2
AC BIAS
R EXTS
BCUR
GAIN 2
GND
(+5)VCC
+CLK
-CLR A
-DEG
+WRCUR
+STCUR
+AC BIAS
+BIAS CUR
-WD0L
-WD1L
-WD2L
+DP
+5 WE
+LP
+LPW0 TK7
+LPW1 TK6
+LPW2 TK5
COMPTR 3432 F3
Σ>0V
Q5 2N3019
Q6 2N3019
Q7 2N3019
Q8 2N3019
Q9 2N3019
Q10 2N3019
+5V
-6V
COMPUTER PERIPHERALS INC
PWA WRITE
CODE IDENT 05875
C
DWG NO 77041210
REV J
SHEET 5
77041210

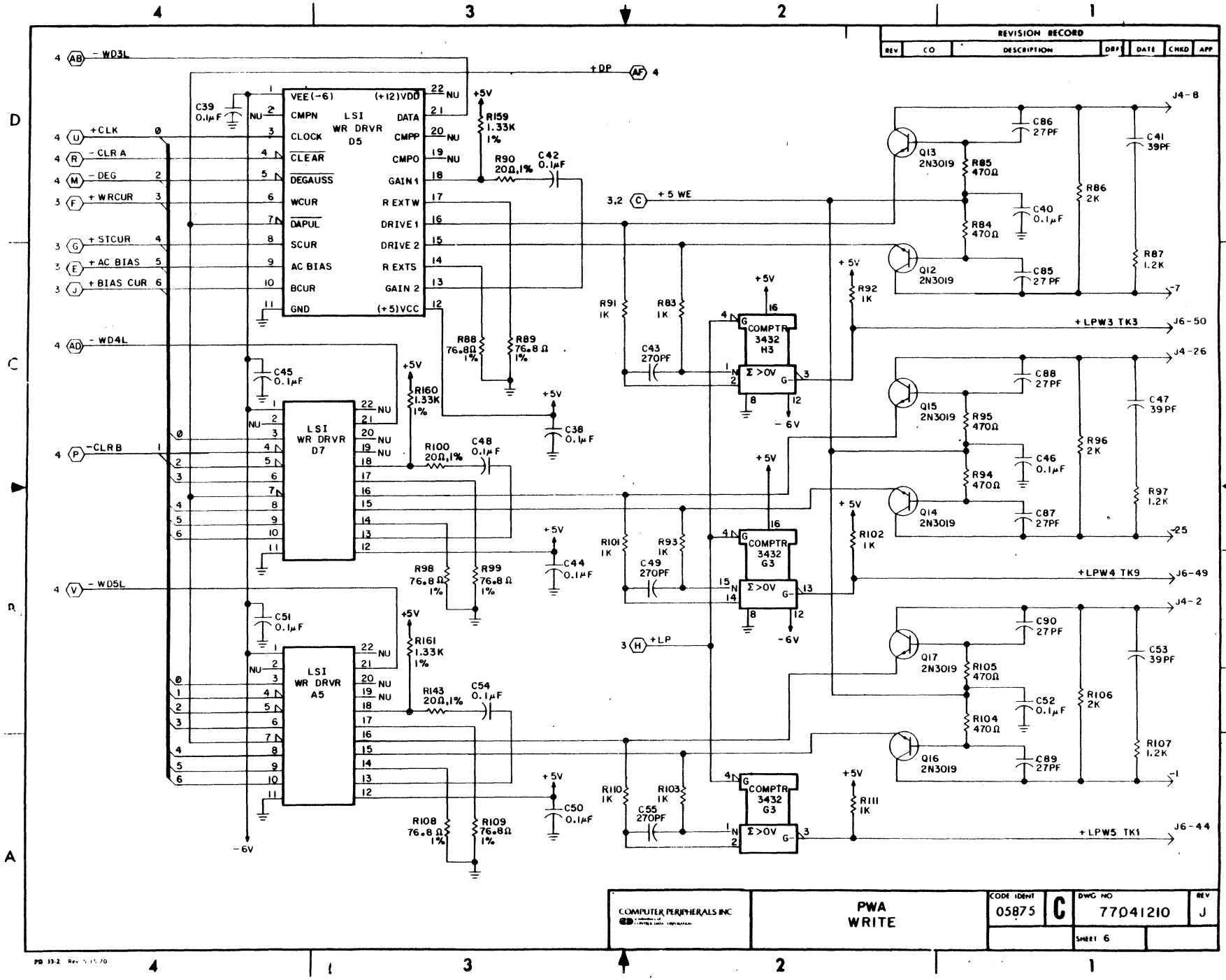
REVISION RECORD
REV | CO | DESCRIPTION | DRFT | DATE | CHKD | APP
LSI WR DRVR D5
LSI WR DRVR D7
LSI WR DRVR A5
VEE(-6)
CMPN
CLOCK
CLEAR
DEGAUSS
WCUR
DAPUL
SCUR
AC BIAS
BCUR
GND
(+12)VDD
DATA
CMPP
CMPO
GAIN1
R EXTW
DRIVE 1
DRIVE 2
R EXTS
GAIN 2
(+5)VCC
- WD3L
+ DP
+CLK
- CLR A
- DEG
+ WRCUR
+ STCUR
+ AC BIAS
+ BIAS CUR
- WD4L
-CLR B
- WD5L
+ 5 WE
+LP
+LPW3 TK3
+LPW4 TK9
+LPW5 TK1
COMPTR 3432 H3
COMPTR 3432 G3
Σ >0V
+5V
-6V
Q13 2N3019
Q12 2N3019
Q15 2N3019
Q14 2N3019
Q17 2N3019
Q16 2N3019
COMPUTER PERIPHERALS INC
PWA WRITE
CODE IDENT 05875
C
DWG NO 77041210
REV J
SHEET 6
77041210

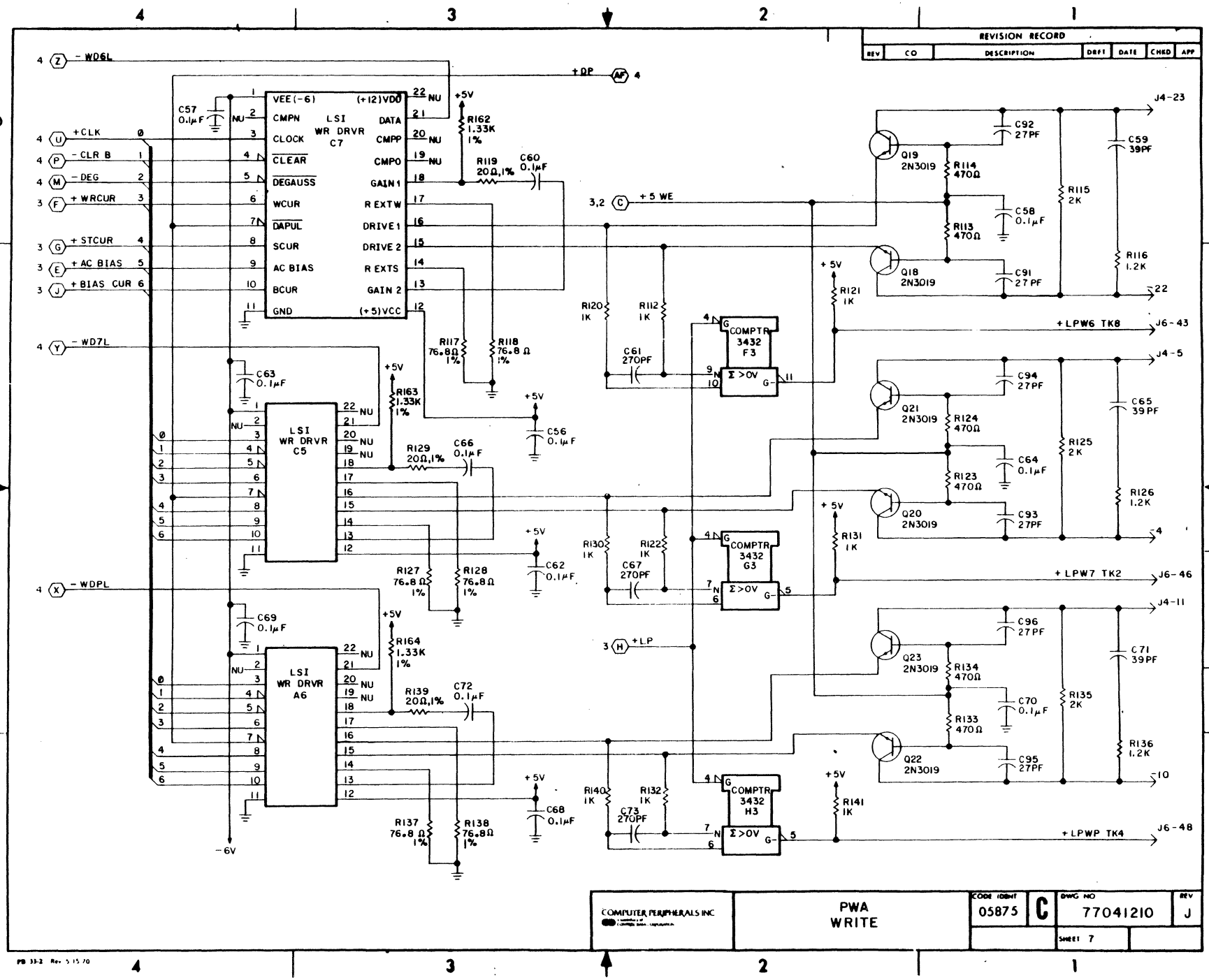
REVISION RECORD
REV CO DESCRIPTION DRFT DATE CHKD APP
- WD6L
+DP
+CLK
- CLR B
- DEG
+ WRCUR
+ STCUR
+ AC BIAS
+ BIAS CUR
- WD7L
- WDPL
+ 5 WE
+LP
+LPW6 TK8
+LPW7 TK2
+LPWP TK4
LSI WR DRVR C7
LSI WR DRVR C5
LSI WR DRVR A6
VEE(-6)
(+12)VDD
CMPN
CLOCK
CLEAR
DEGAUSS
WCUR
DAPUL
SCUR
AC BIAS
BCUR
GND
DATA
CMPP
CMPO
GAIN1
R EXTW
DRIVE 1
DRIVE 2
R EXTS
GAIN 2
(+5)VCC
COMPTR 3432 F3
COMPTR 3432 G3
COMPTR 3432 H3
Σ >0V
Q19 2N3019
Q18 2N3019
Q21 2N3019
Q20 2N3019
Q23 2N3019
Q22 2N3019
+5V
-6V
COMPUTER PERIPHERALS INC
PWA WRITE
CODE IDENT 05875
C
DWG NO 77041210
REV J
SHEET 7

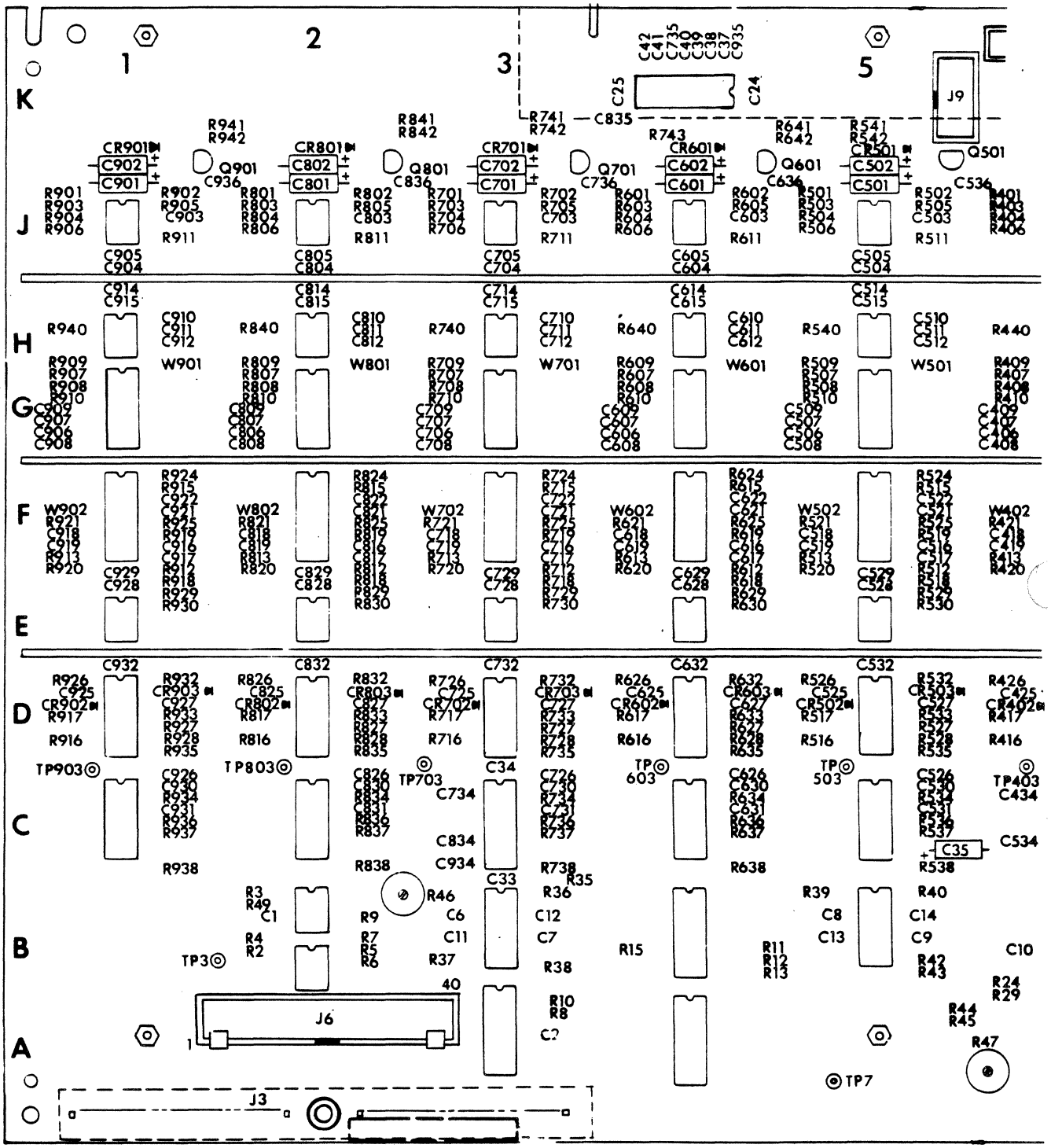


READ AMPLIFIER PWA

SHEET 1A

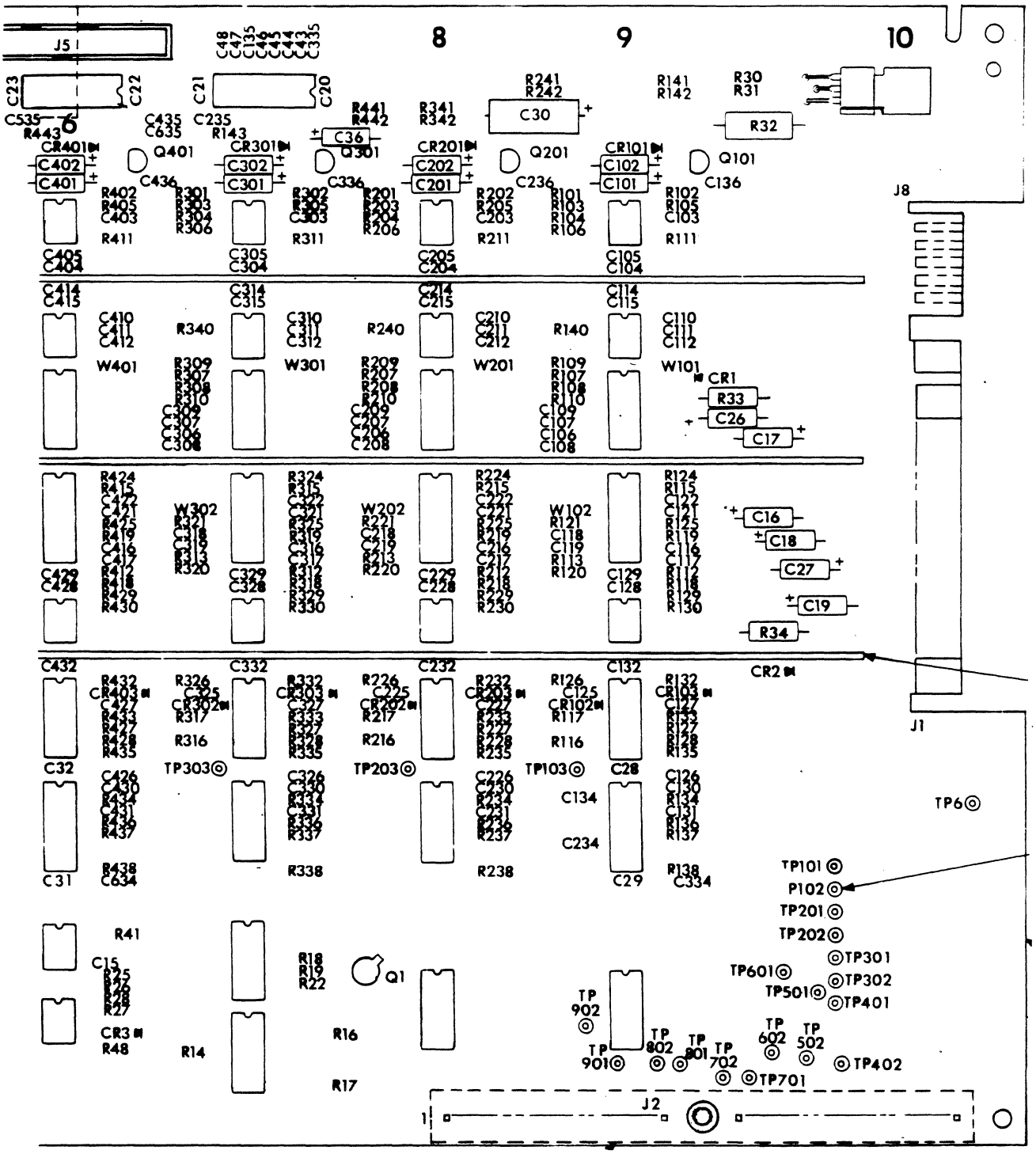


READ AMPLIFIER PWA

SHEET 1B

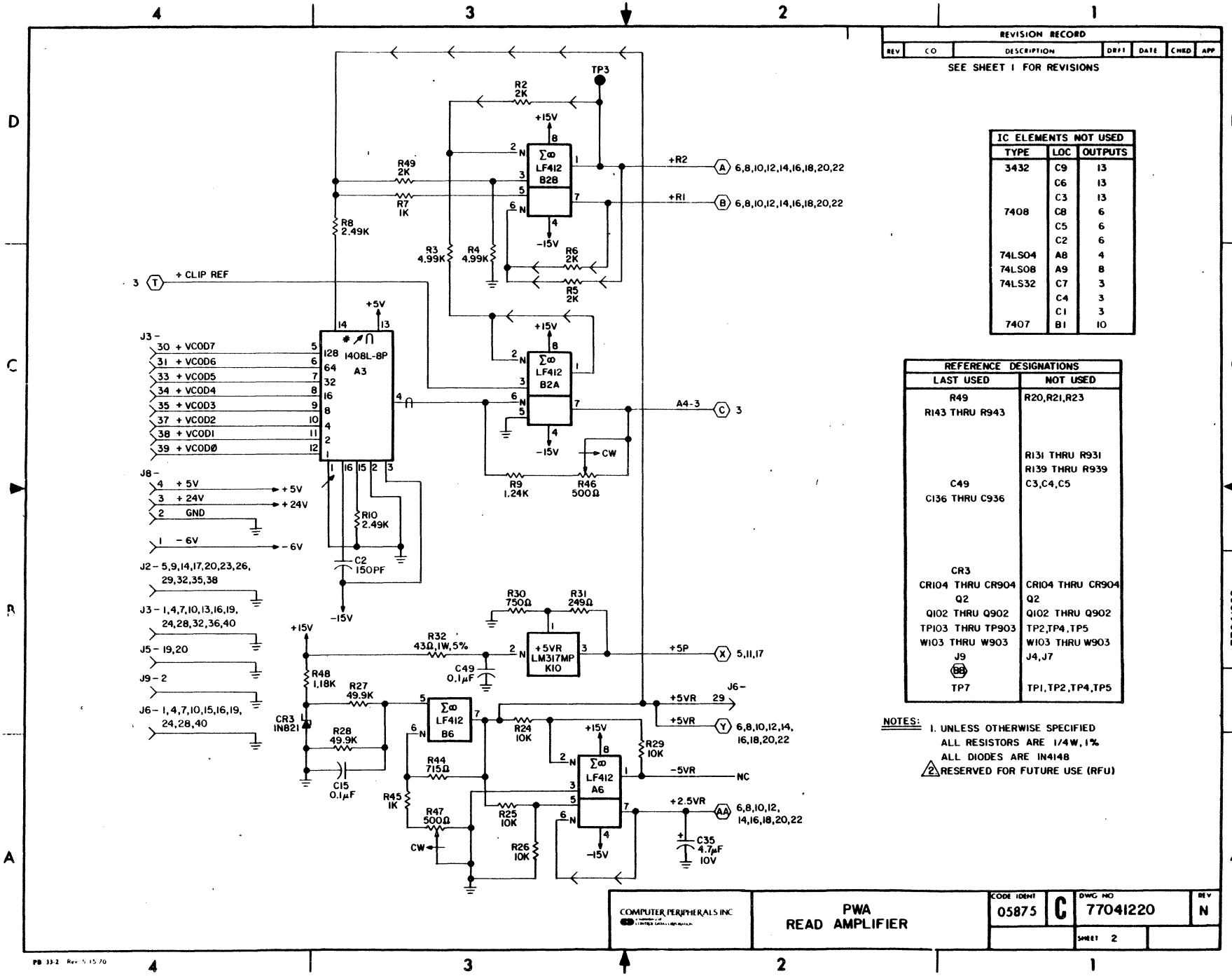


| IC ELEMENTS NOT USED | | |
|---|---|---|
| TYPE | LOC | OUTPUTS |
| 3432 | C9 | 13 |
| | C6 | 13 |
| | C3 | 13 |
| 7408 | C8 | 6 |
| | C5 | 6 |
| | C2 | 6 |
| 74LS04 | A8 | 4 |
| 74LS08 | A9 | 8 |
| 74LS32 | C7 | 3 |
| | C4 | 3 |
| | C1 | 3 |
| 7407 | B1 | 10 |

| REFERENCE DESIGNATIONS | |
|---|---|
| LAST USED | NOT USED |
| R49 | R20,R21,R23 |
| R143 THRU R943 | |
| | R131 THRU R931 |
| | R139 THRU R939 |
| C49 | C3,C4,C5 |
| C136 THRU C936 | |
| CR3 | |
| CR104 THRU CR904 | CR104 THRU CR904 |
| Q2 | Q2 |
| Q102 THRU Q902 | Q102 THRU Q902 |
| TP103 THRU TP903 | TP2,TP4,TP5 |
| W103 THRU W903 | W103 THRU W903 |
| J9 | J4,J7 |
| BB | |
| TP7 | TP1,TP2,TP4,TP5 |

REVISION RECORD

| REV | CO | DESCRIPTION | DRFT | DATE | CHKD | APP |
|---|---|---|---|---|---|---|

SEE SHEET 1 FOR REVISIONS

NOTES:
1. UNLESS OTHERWISE SPECIFIED ALL RESISTORS ARE 1/4W, 1% ALL DIODES ARE IN4148
2. RESERVED FOR FUTURE USE (RFU)

COMPUTER PERIPHERALS INC

PWA
READ AMPLIFIER

| CODE IDENT | | DWG NO | REV |
|---|---|---|---|
| 05875 | C | 77041220 | N |
| | | SHEET 2 | |

77041220

PB 33-2 Rev 5.15.70

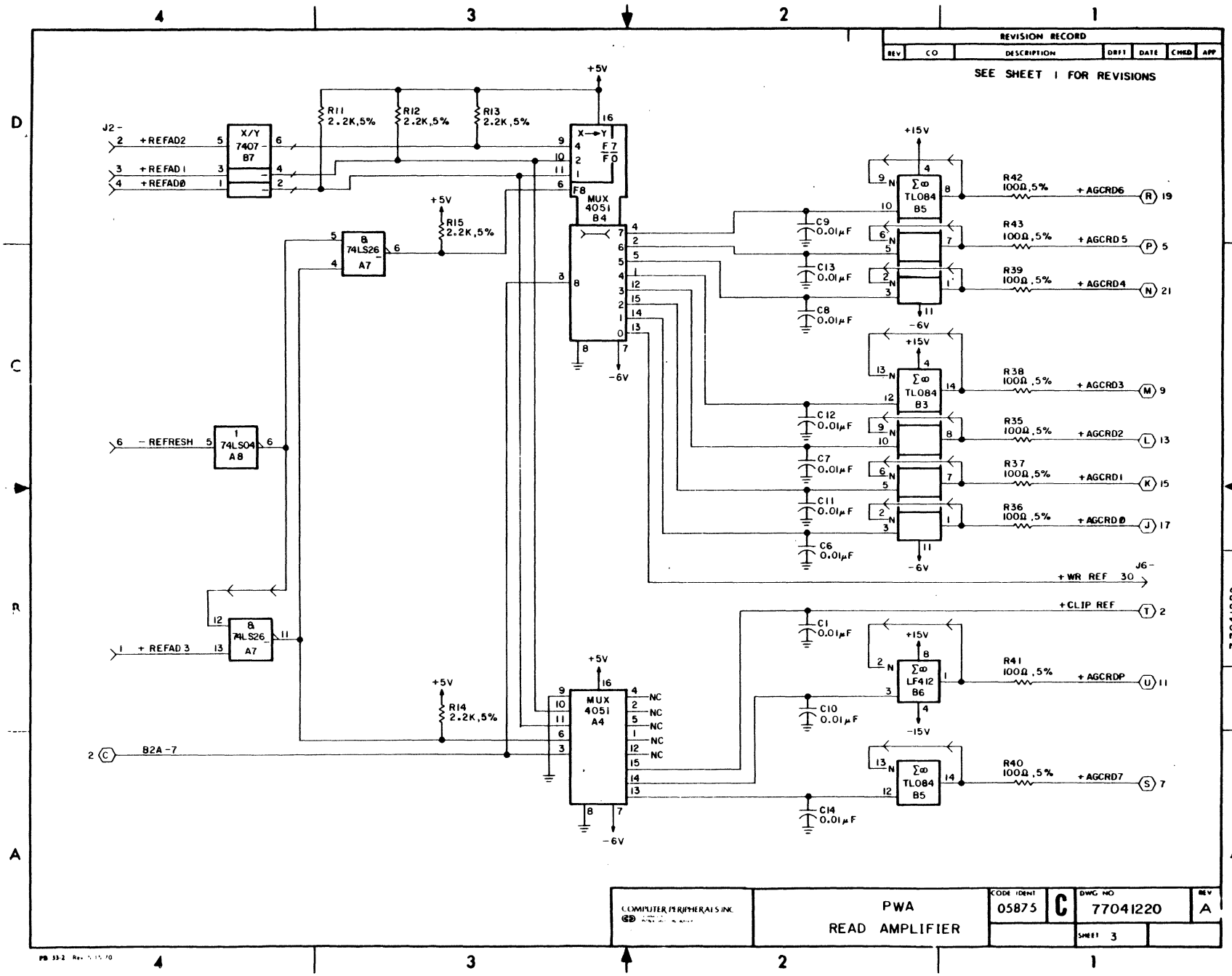
REVISION RECORD
REV | CO | DESCRIPTION | DRFT | DATE | CHKD | APP
SEE SHEET 1 FOR REVISIONS
+5V
R11 2.2K,5%
R12 2.2K,5%
R13 2.2K,5%
J2-
+REFAD2
+REFAD1
+REFAD0
X/Y 7407 B7
MUX 4051 B4
R15 2.2K,5%
8 74LS26 A7
+15V
-6V
TL084 B5
TL084 B3
LF412 B6
-15V
C9 0.01µF
C13 0.01µF
C8 0.01µF
C12 0.01µF
C7 0.01µF
C11 0.01µF
C6 0.01µF
C1 0.01µF
C10 0.01µF
C14 0.01µF
R42 100Ω,5%
R43 100Ω,5%
R39 100Ω,5%
R38 100Ω,5%
R35 100Ω,5%
R37 100Ω,5%
R36 100Ω,5%
R41 100Ω,5%
R40 100Ω,5%
+AGCRD6
+AGCRD5
+AGCRD4
+AGCRD3
+AGCRD2
+AGCRD1
+AGCRD0
+AGCRDP
+AGCRD7
- REFRESH
1 74LS04 A8
+REFAD3
B2A-7
J6-
+WR REF 30
+CLIP REF
R14 2.2K,5%
MUX 4051 A4
NC
COMPUTER PERIPHERALS INC
PWA
READ AMPLIFIER
CODE IDENT 05875
C
DWG NO 77041220
REV A
SHEET 3
77041220

| REVISION RECORD | | | | | | |
|---|---|---|---|---|---|---|
| REV | CO | DESCRIPTION | DRFT | DATE | CHKD | APP |

SEE SHEET 1 FOR REVISIONS

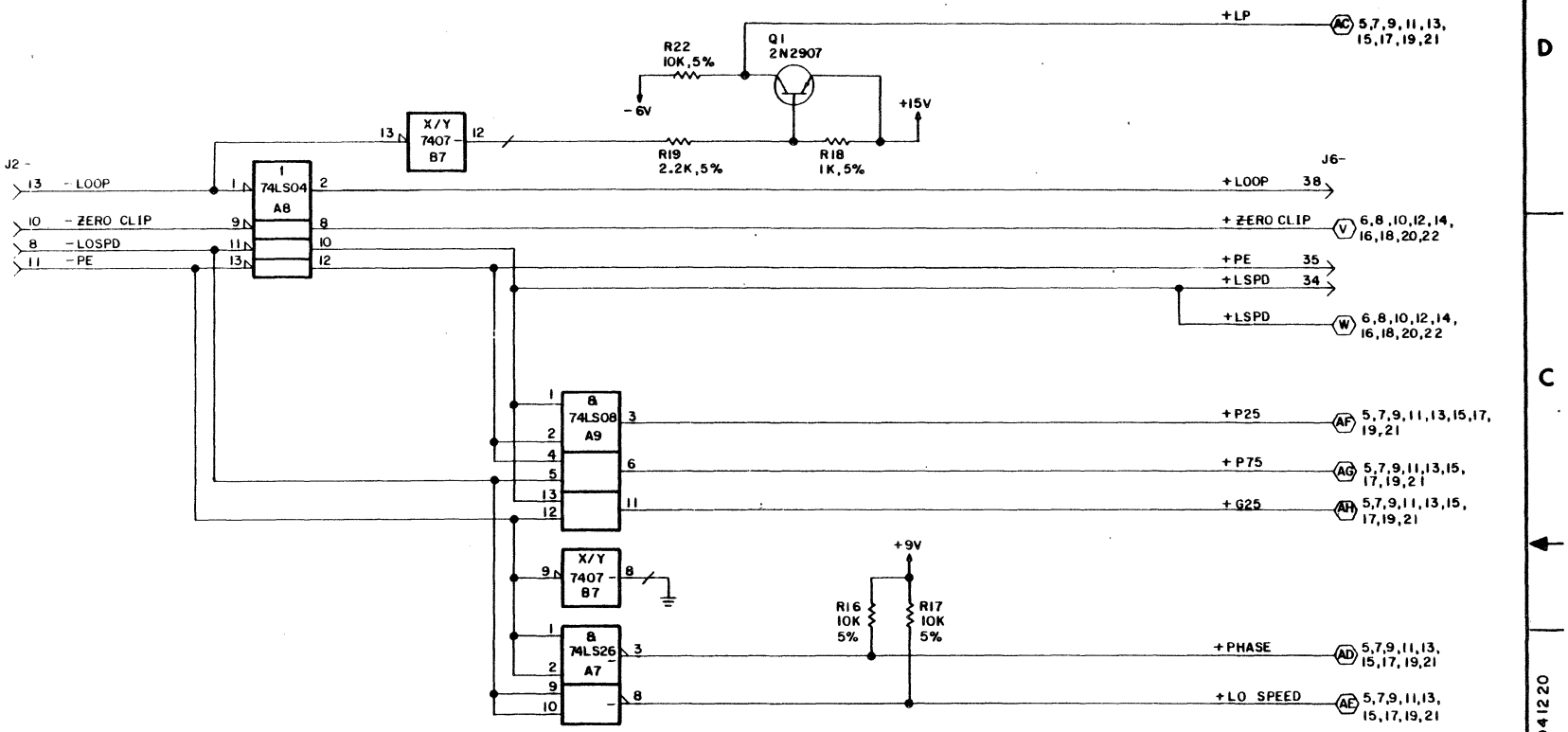


AC 5,7,9,11,13,15,17,19,21
V 6,8,10,12,14,16,18,20,22
W 6,8,10,12,14,16,18,20,22
AF 5,7,9,11,13,15,17,19,21
AG 5,7,9,11,13,15,17,19,21
AH 5,7,9,11,13,15,17,19,21
AD 5,7,9,11,13,15,17,19,21
AE 5,7,9,11,13,15,17,19,21

| | | | |
|---|---|---|---|
| COMPUTER PERIPHERALS INC | PWA READ AMPLIFIER | CODE IDENT 05875 / C | DWG NO 77041220 / REV M |
| | | | SHEET 4 |

77041220

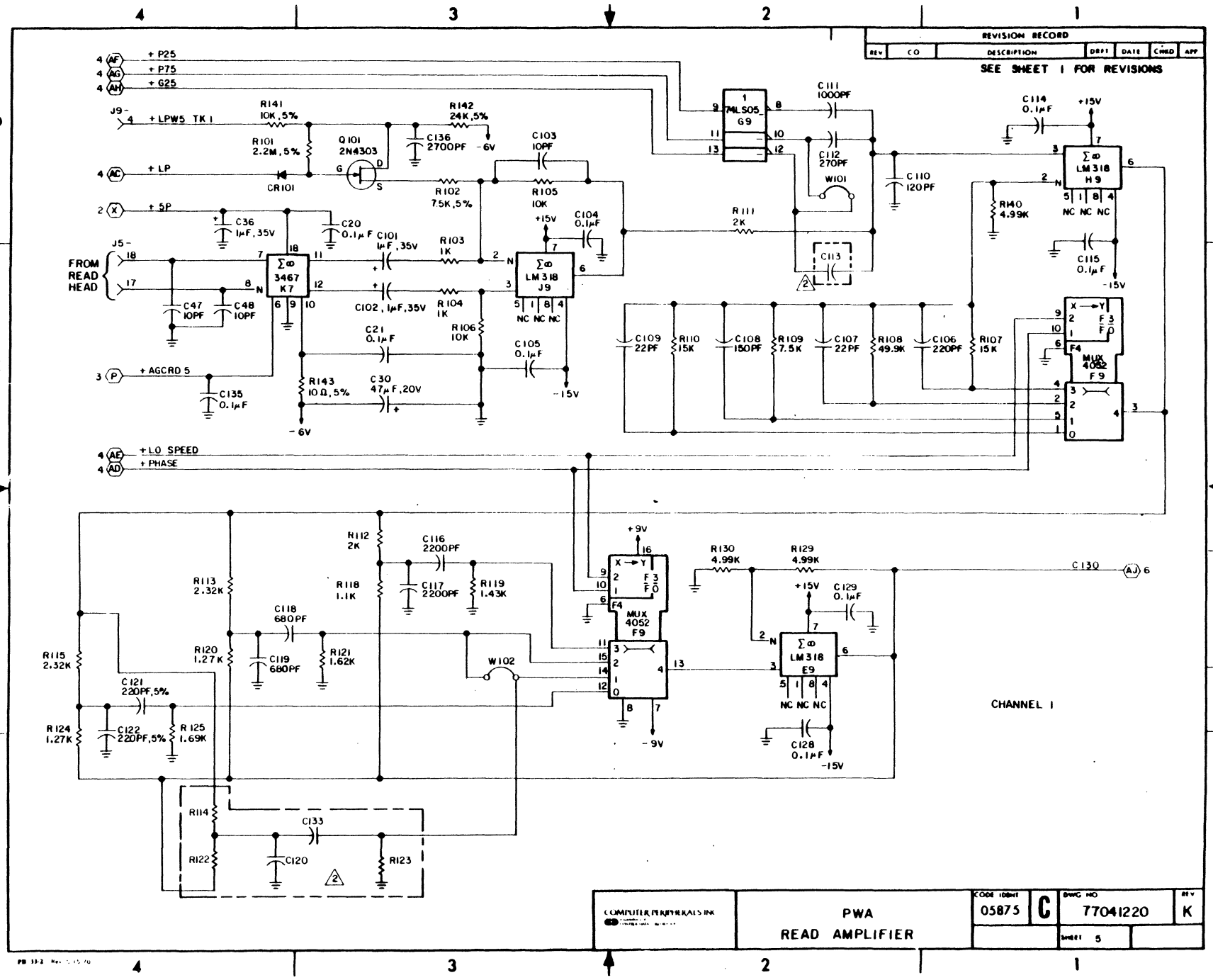
REVISION RECORD
REV | CO | DESCRIPTION | DRFT | DATE | CHKD | APP
SEE SHEET 1 FOR REVISIONS
+ P25
+ P75
+ G25
+ LPW5 TK 1
+ LP
+ 5P
FROM READ HEAD
+ AGCRD 5
+ LO SPEED
+ PHASE
R141 10K,5%
R142 24K,5%
R101 2.2M,5%
Q101 2N4303
CR101
C136 2700PF
-6V
R102 7.5K,5%
C103 10PF
R105 10K
C111 1000PF
C112 270PF
W101
C110 120PF
C114 0.1μF
+15V
R140 4.99K
C115 0.1μF
-15V
C36 1μF,35V
C20 0.1μF
C101 1μF,35V
R103 1K
C104 0.1μF
R111 2K
C113
C47 10PF
C48 10PF
C102, 1μF,35V
R104 1K
C21 0.1μF
R106 10K
C105 0.1μF
C135 0.1μF
R143 10Ω,5%
C30 47μF,20V
C109 22PF
R110 15K
C108 150PF
R109 7.5K
C107 22PF
R108 49.9K
C106 220PF
R107 15K
R112 2K
C116 2200PF
R113 2.32K
R118 1.1K
C117 2200PF
R119 1.43K
+9V
-9V
R130 4.99K
R129 4.99K
C130
C129 0.1μF
C118 680PF
R120 1.27K
C119 680PF
R121 1.62K
W102
R115 2.32K
C121 220PF,5%
R124 1.27K
C122 220PF,5%
R125 1.69K
C128 0.1μF
CHANNEL 1
R114
C133
R122
C120
R123
MUX 4052 F9
LM318 H9
LM318 J9
LM318 E9
3467 K7
NC NC NC
COMPUTER PERIPHERALS INC.
PWA
READ AMPLIFIER
CODE IDENT 05875
C
DWG NO 77041220
REV K
SHEET 5

| REVISION RECORD | | | | | | |
|---|---|---|---|---|---|---|
| REV | CO | DESCRIPTION | DRFT | DATE | CHKD | APP |

SEE SHEET 1 FOR REVISIONS

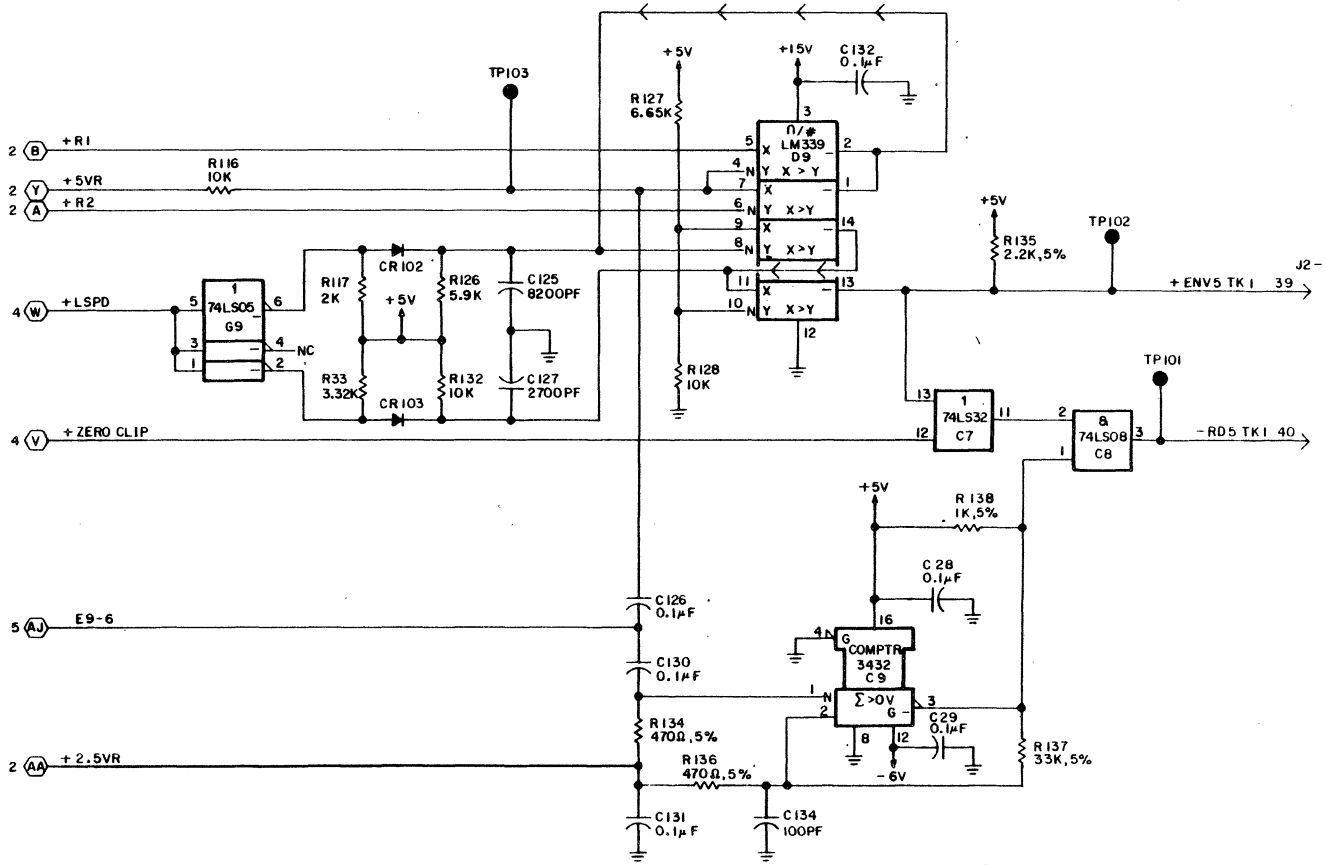


CHANNEL 1

| COMPUTER PERIPHERALS INC | PWA READ AMPLIFIER | CODE IDENT 05875 | C | DWG NO 77041220 | REV E |
|---|---|---|---|---|---|
| | | | | SHEET 6 | |

PB 33-2 Rev 5 15 70

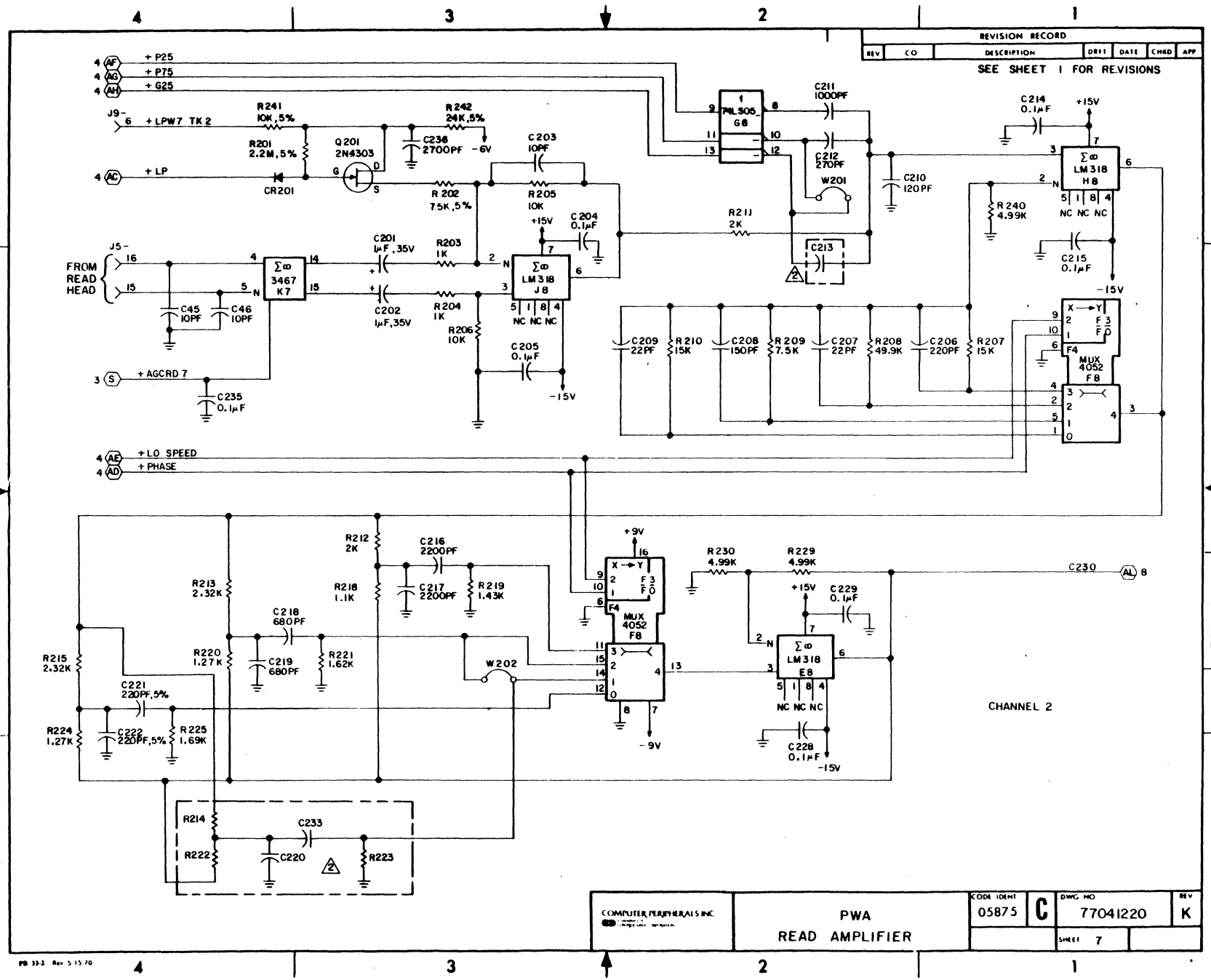
REVISION RECORD
REV | CO | DESCRIPTION | DRFT | DATE | CHKD | APP
SEE SHEET 1 FOR REVISIONS
+P25
+P75
+G25
+LPW7 TK2
+LP
CR201
Q201 2N4303
R241 10K,5%
R201 2.2M,5%
R242 24K,5%
C236 2700PF -6V
R202 7.5K,5%
C203 10PF
R205 10K
C204 0.1μF
C211 1000PF
C212 270PF
W201
C210 120PF
R211 2K
C213
C214 0.1μF
+15V
R240 4.99K
C215 0.1μF
-15V
FROM READ HEAD
C45 10PF
C46 10PF
C201 1μF,35V
C202 1μF,35V
R203 1K
R204 1K
R206 10K
C205 0.1μF
+AGCRD 7
C235 0.1μF
C209 22PF
R210 15K
C208 150PF
R209 7.5K
C207 22PF
R208 49.9K
C206 220PF
R207 15K
MUX 4052 F8
+LO SPEED
+PHASE
R212 2K
C216 2200PF
R213 2.32K
R218 1.1K
C217 2200PF
R219 1.43K
+9V
-9V
R230 4.99K
R229 4.99K
C230
C229 0.1μF
C228 0.1μF
C218 680PF
R220 1.27K
C219 680PF
R221 1.62K
W202
R215 2.32K
C221 220PF,5%
R224 1.27K
C222 220PF,5%
R225 1.69K
R214
R222
C233
C220
R223
CHANNEL 2
COMPUTER PERIPHERALS INC.
PWA
READ AMPLIFIER
CODE IDENT 05875
C
DWG NO 77041220
REV K
SHEET 7
PB 33-1 Rev 5 15 70

| REVISION RECORD | | | | | | |
|---|---|---|---|---|---|---|
| REV | CO | DESCRIPTION | DRFT | DATE | CHKD | APP |

SEE SHEET 1 FOR REVISIONS

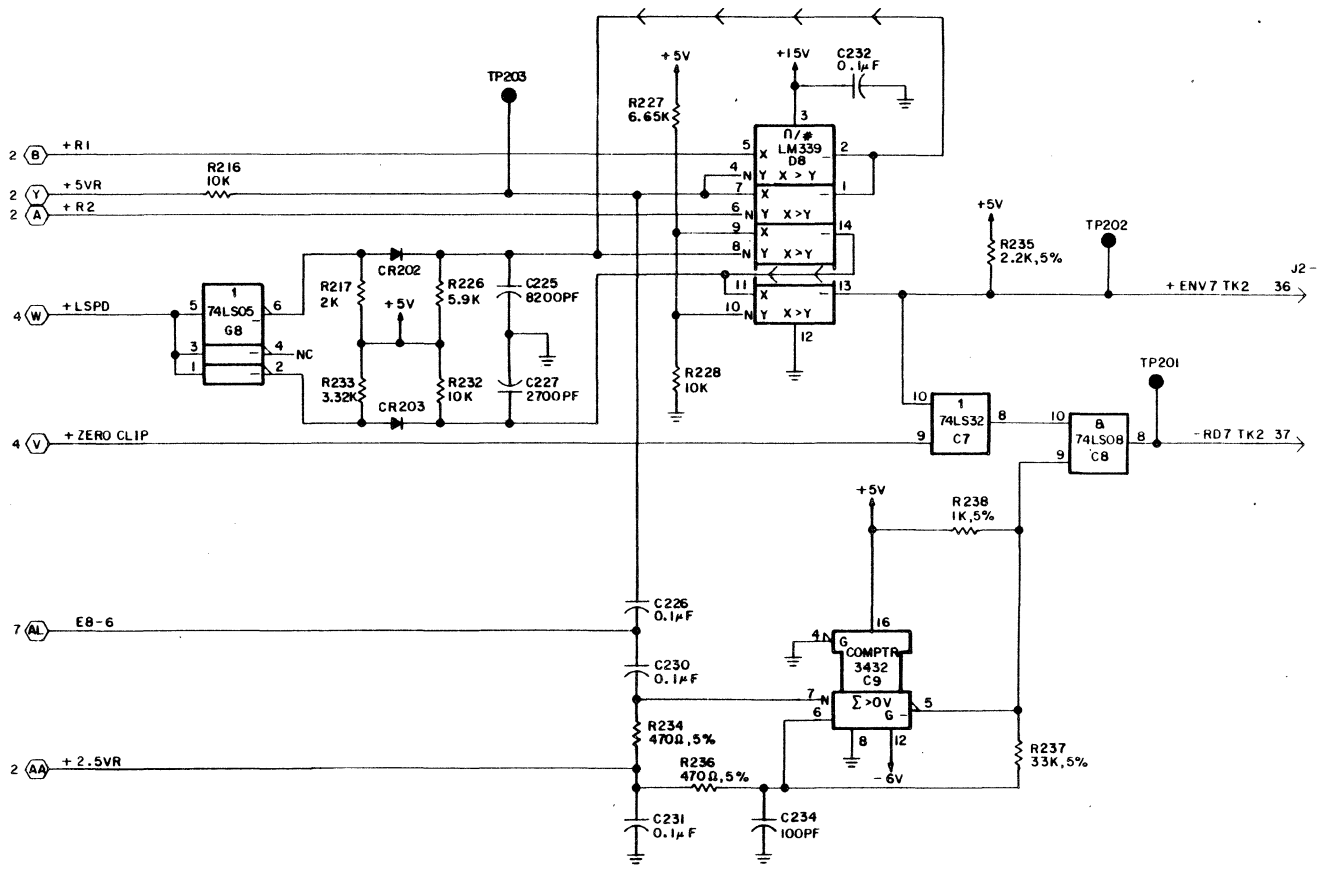


| COMPUTER PERIPHERALS INC. | PWA READ AMPLIFIER | CODE IDENT 05875 | C | DWG NO 77041220 | REV E |
|---|---|---|---|---|---|
| | | | | SHEET 8 | |

PB 33-2 Rev. 5 15 70

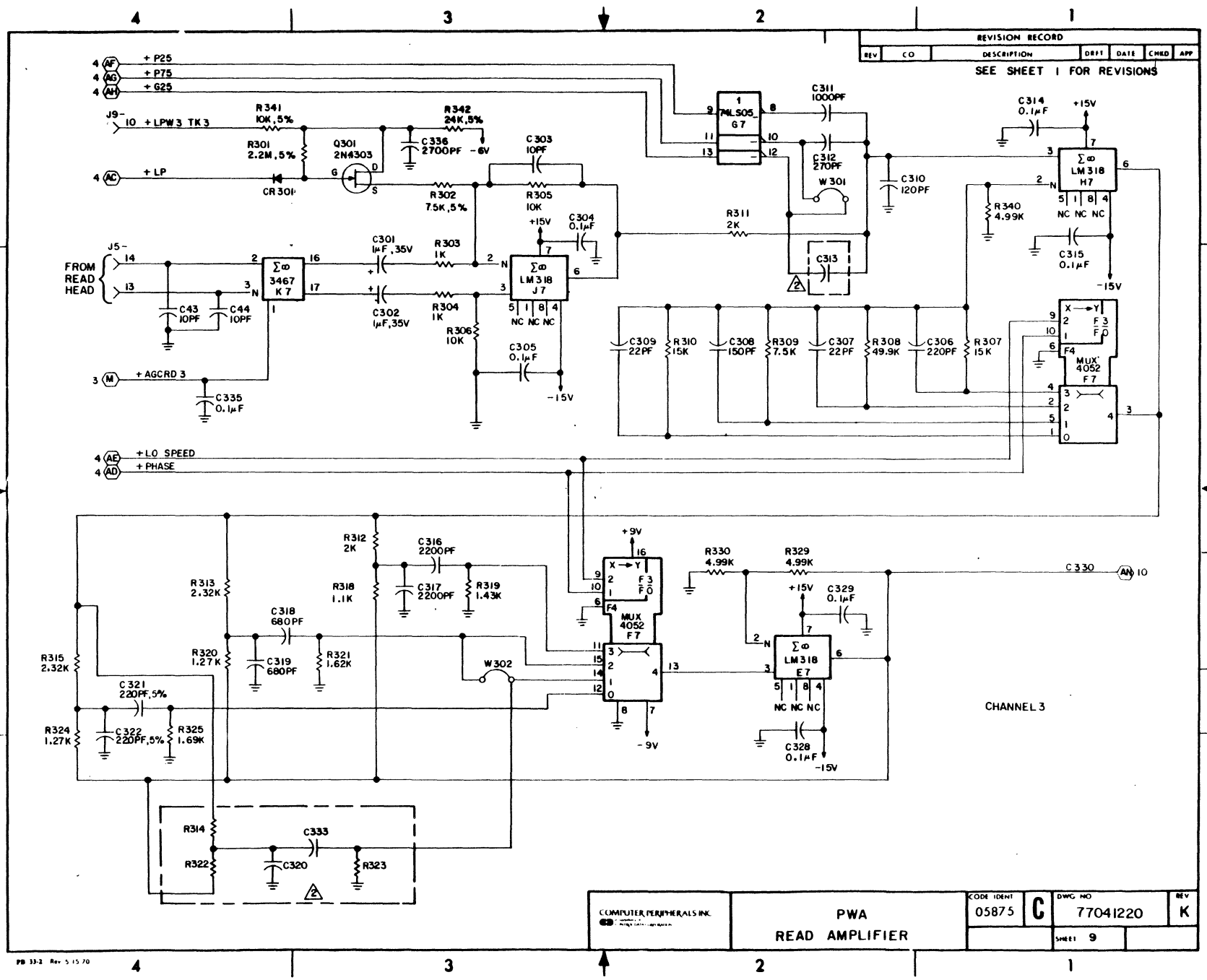
REVISION RECORD
REV | CO | DESCRIPTION | DRFT | DATE | CHKD | APP
SEE SHEET 1 FOR REVISIONS
+P25
+P75
+G25
+LPW3 TK3
+LP
+AGCRD 3
+LO SPEED
+PHASE
FROM READ HEAD
R341 10K,5%
R342 24K,5%
R301 2.2M,5%
Q301 2N4303
CR301
C336 2700PF -6V
R302 7.5K,5%
C303 10PF
R305 10K
C304 0.1µF
R303 1K
R304 1K
R306 10K
C301 1µF,35V
C302 1µF,35V
C305 0.1µF
C43 10PF
C44 10PF
C335 0.1µF
3467 K7
LM318 J7
MLS05 G7
C311 1000PF
C312 270PF
W301
C313
C310 120PF
R311 2K
C314 0.1µF
C315 0.1µF
LM318 H7
R340 4.99K
NC NC NC
+15V
-15V
C309 22PF
R310 15K
C308 150PF
R309 7.5K
C307 22PF
R308 49.9K
C306 220PF
R307 15K
MUX 4052 F7
R312 2K
C316 2200PF
C317 2200PF
R318 1.1K
R319 1.43K
R313 2.32K
C318 680PF
C319 680PF
R320 1.27K
R321 1.62K
W302
R315 2.32K
C321 220PF,5%
C322 220PF,5%
R324 1.27K
R325 1.69K
+9V
-9V
R330 4.99K
R329 4.99K
C329 0.1µF
C328 0.1µF
C330
CHANNEL 3
R314
R322
C333
C320
R323
COMPUTER PERIPHERALS INC.
PWA
READ AMPLIFIER
CODE IDENT 05875
C
DWG NO 77041220
REV K
SHEET 9
PB 33-2 Rev 5 15 70

| REVISION RECORD | | | | | | |
|---|---|---|---|---|---|---|
| REV | CO | DESCRIPTION | DRFT | DATE | CHKD | APP |

SEE SHEET 1 FOR REVISIONS

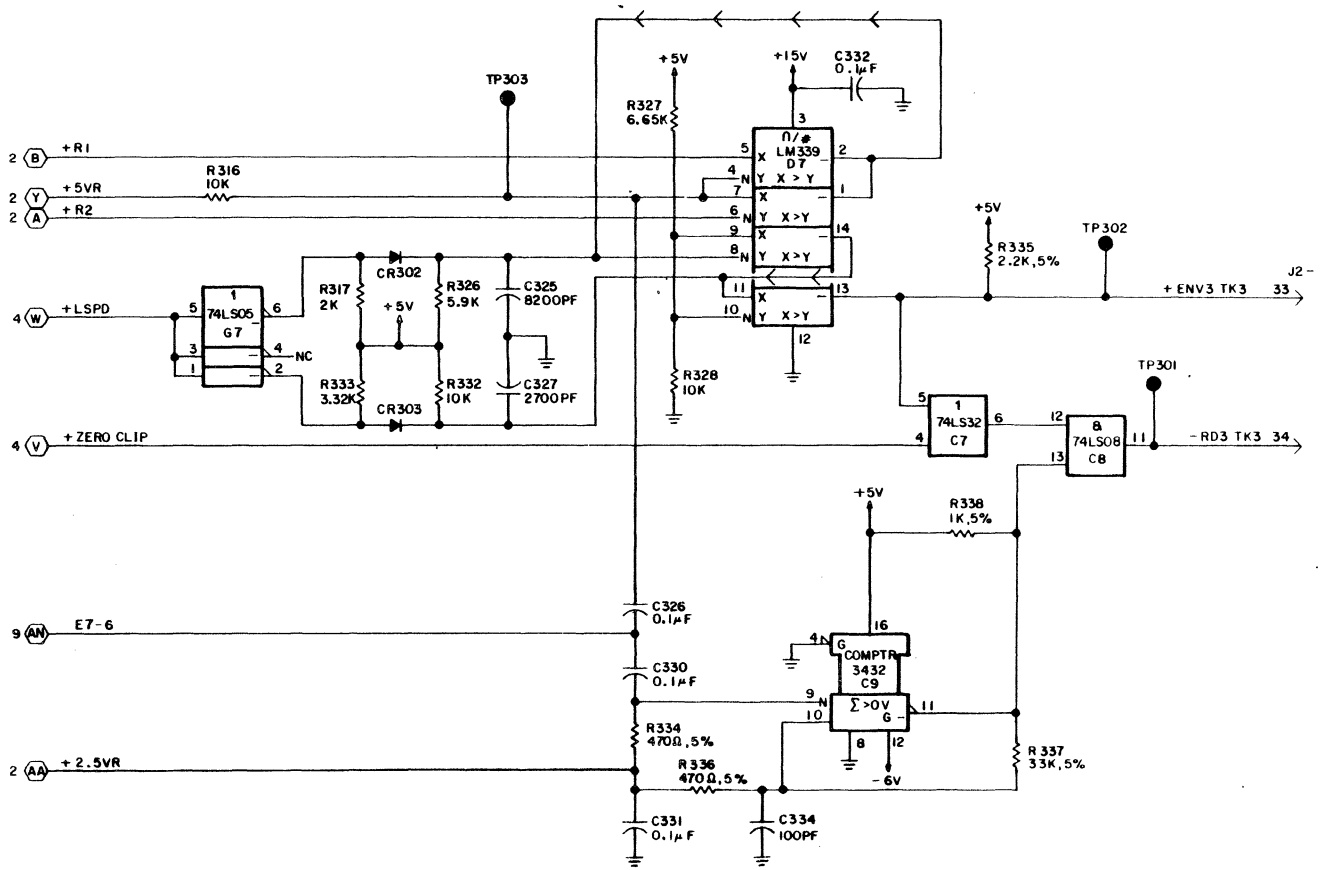


| COMPUTER PERIPHERALS INC. | PWA READ AMPLIFIER | CODE IDENT 05875 | C | DWG NO 77041220 | REV E |
|---|---|---|---|---|---|
| | | | | SHEET 10 | |

PB 33-2 Rev 5 15 70

77041220

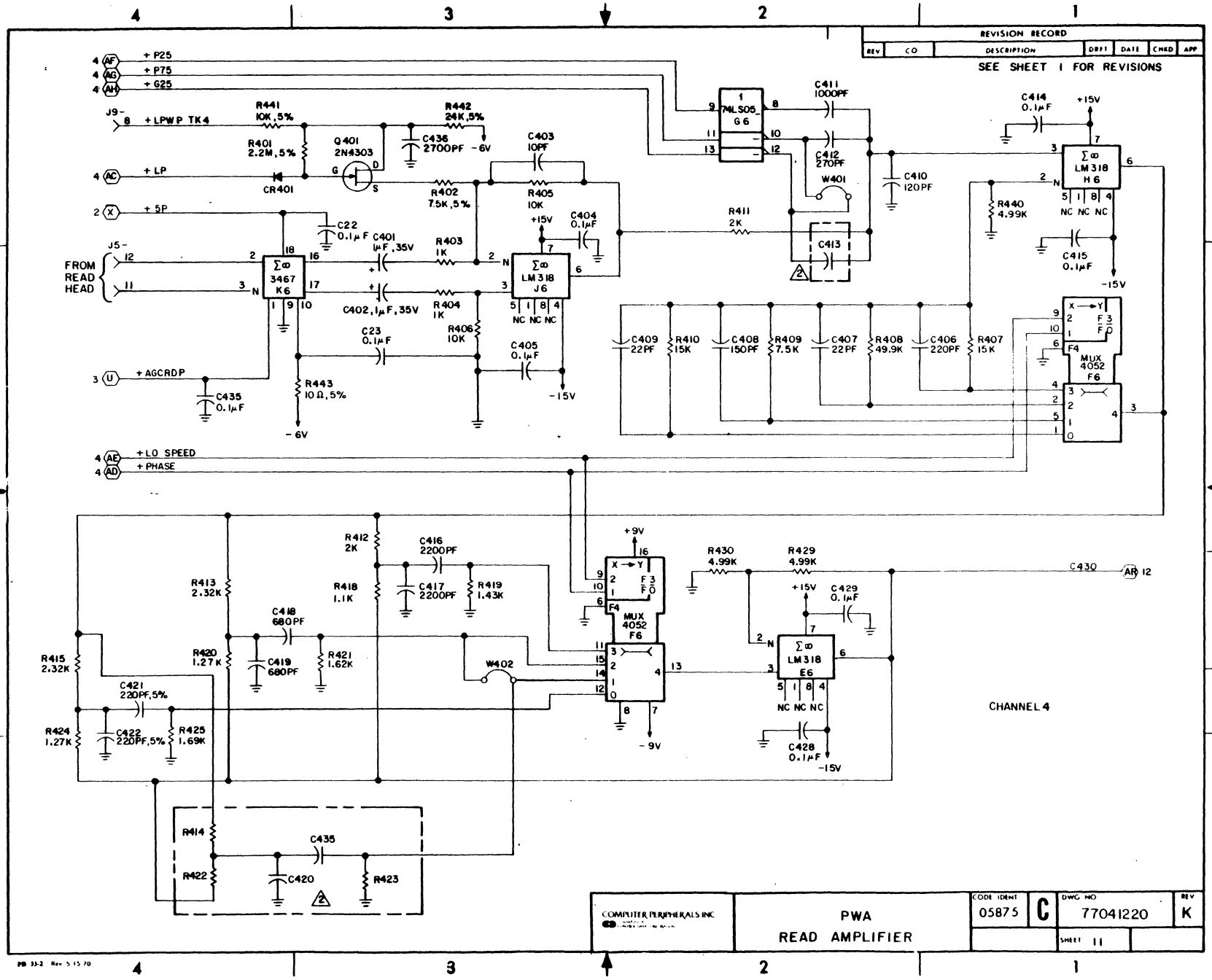
REVISION RECORD
REV | CO | DESCRIPTION | DRFT | DATE | CHKD | APP
SEE SHEET 1 FOR REVISIONS
+P25
+P75
+G25
J9-8 +LPWP TK4
+LP
+5P
J5- FROM READ HEAD 12 11
+AGCRDP
+LO SPEED
+PHASE
R441 10K,5%
R442 24K,5%
R401 2.2M,5%
Q401 2N4303
CR401
C436 2700PF -6V
C403 10PF
R402 7.5K,5%
R405 10K
C22 0.1μF
C401 μF,35V
C402,1μF,35V
R403 1K
R404 1K
R406 10K
C23 0.1μF
C404 0.1μF
C405 0.1μF
C435 0.1μF
R443 10Ω,5%
-6V
+15V
-15V
3467 K6
LM318 J6
NC NC NC
74LS05 G6
C411 1000PF
C412 270PF
W401
R411 2K
C413
C410 120PF
C414 0.1μF
LM318 H6
R440 4.99K
C415 0.1μF
C409 22PF
R410 15K
C408 150PF
R409 7.5K
C407 22PF
R408 49.9K
C406 220PF
R407 15K
MUX 4052 F6
R412 2K
C416 2200PF
C417 2200PF
R419 1.43K
R413 2.32K
R418 1.1K
C418 680PF
R420 1.27K
C419 680PF
R421 1.62K
W402
R415 2.32K
C421 220PF,5%
R424 1.27K
C422 220PF,5%
R425 1.69K
+9V
-9V
R430 4.99K
R429 4.99K
C429 0.1μF
C428 0.1μF
C430
CHANNEL 4
R414
C435
R422
C420
R423
COMPUTER PERIPHERALS INC
PWA
READ AMPLIFIER
CODE IDENT 05875
C
DWG NO 77041220
REV K
SHEET 11
77041220

| REVISION RECORD | | | | | | |
|---|---|---|---|---|---|---|
| REV | CO | DESCRIPTION | DRFT | DATE | CHKD | APP |

SEE SHEET 1 FOR REVISIONS

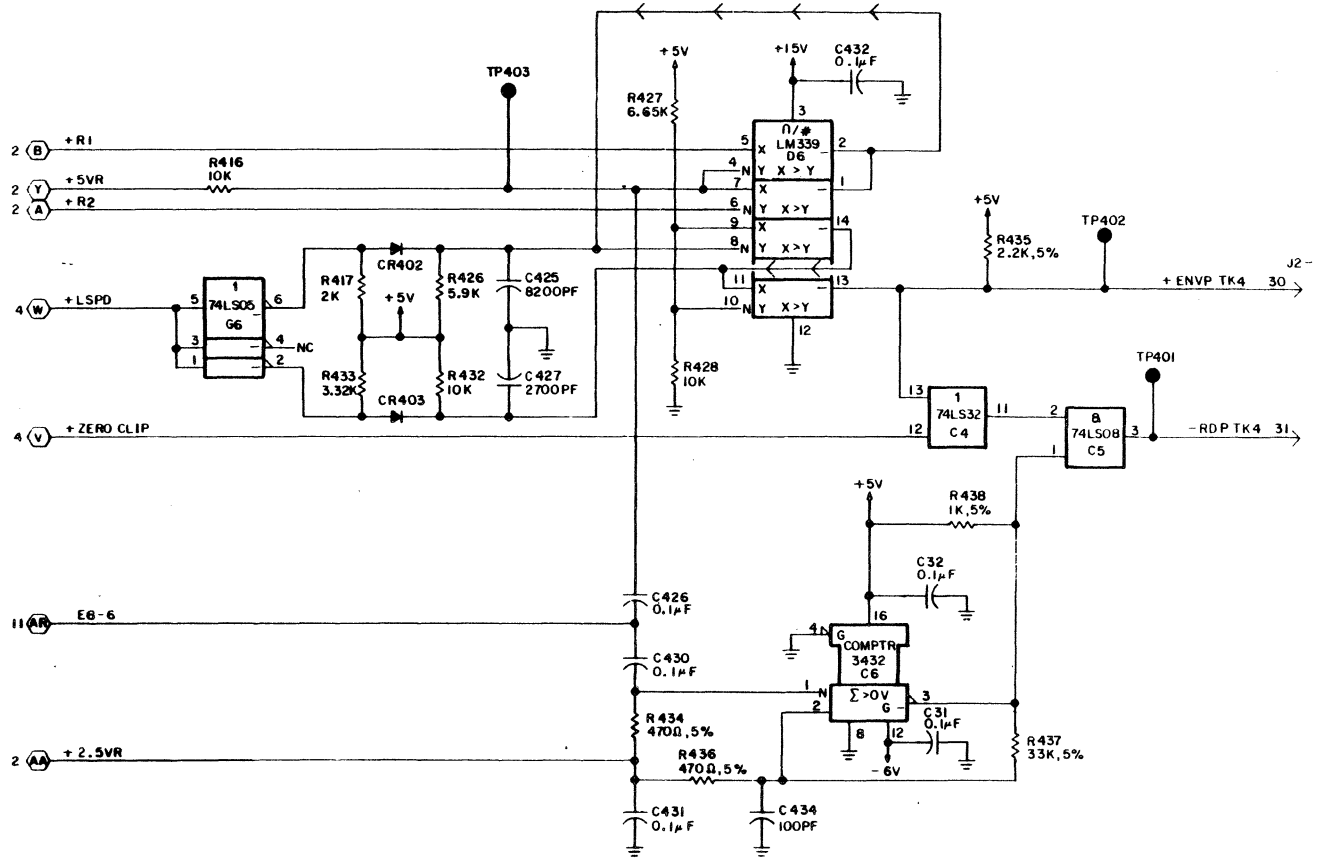


| | | | | |
|---|---|---|---|---|
| COMPUTER PERIPHERALS INC | PWA READ AMPLIFIER | CODE IDENT 05875 | C | DWG NO 77041220 REV E |
| | | | | SHEET 12 |

77041220

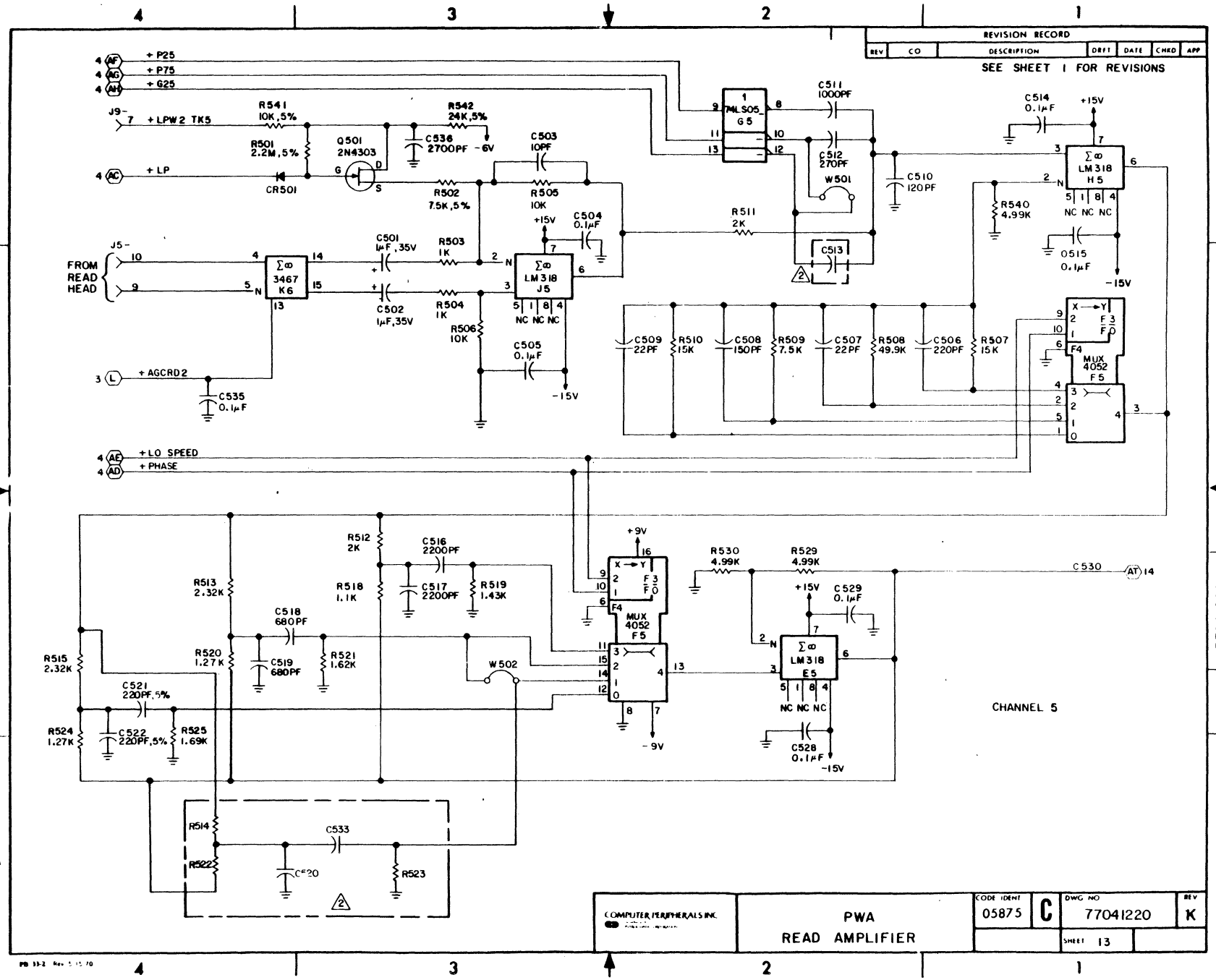
REVISION RECORD
REV | CO | DESCRIPTION | DRFT | DATE | CHKD | APP
SEE SHEET 1 FOR REVISIONS
+P25
+P75
+G25
+LPW2 TK5
+LP
CR501
Q501 2N4303
R501 2.2M,5%
R502 7.5K,5%
R503 1K
R504 1K
R505 10K
R506 10K
R511 2K
R540 4.99K
C501 1μF,35V
C502 1μF,35V
C503 10PF
C504 0.1μF
C505 0.1μF
C510 120PF
C511 1000PF
C512 270PF
C513
C514 0.1μF
C515 0.1μF
C535 0.1μF
W501
FROM READ HEAD
+AGCRD2
+LO SPEED
+PHASE
C509 22PF
R510 15K
C508 150PF
R509 7.5K
C507 22PF
R508 49.9K
C506 220PF
R507 15K
R512 2K
R513 2.32K
R515 2.32K
R518 1.1K
R519 1.43K
R520 1.27K
R521 1.62K
R524 1.27K
R525 1.69K
C516 2200PF
C517 2200PF
C518 680PF
C519 680PF
C521 220PF,5%
C522 220PF,5%
W502
R514
R522
C533
C520
R523
R530 4.99K
R529 4.99K
C529 0.1μF
C528 0.1μF
C530
CHANNEL 5
+15V
-15V
+9V
-9V
MUX 4052 F5
LM318 H5
LM318 J5
LM318 E5
3467 K6
NC NC NC
COMPUTER PERIPHERALS INC.
PWA
READ AMPLIFIER
CODE IDENT 05875
C
DWG NO 77041220
REV K
SHEET 13

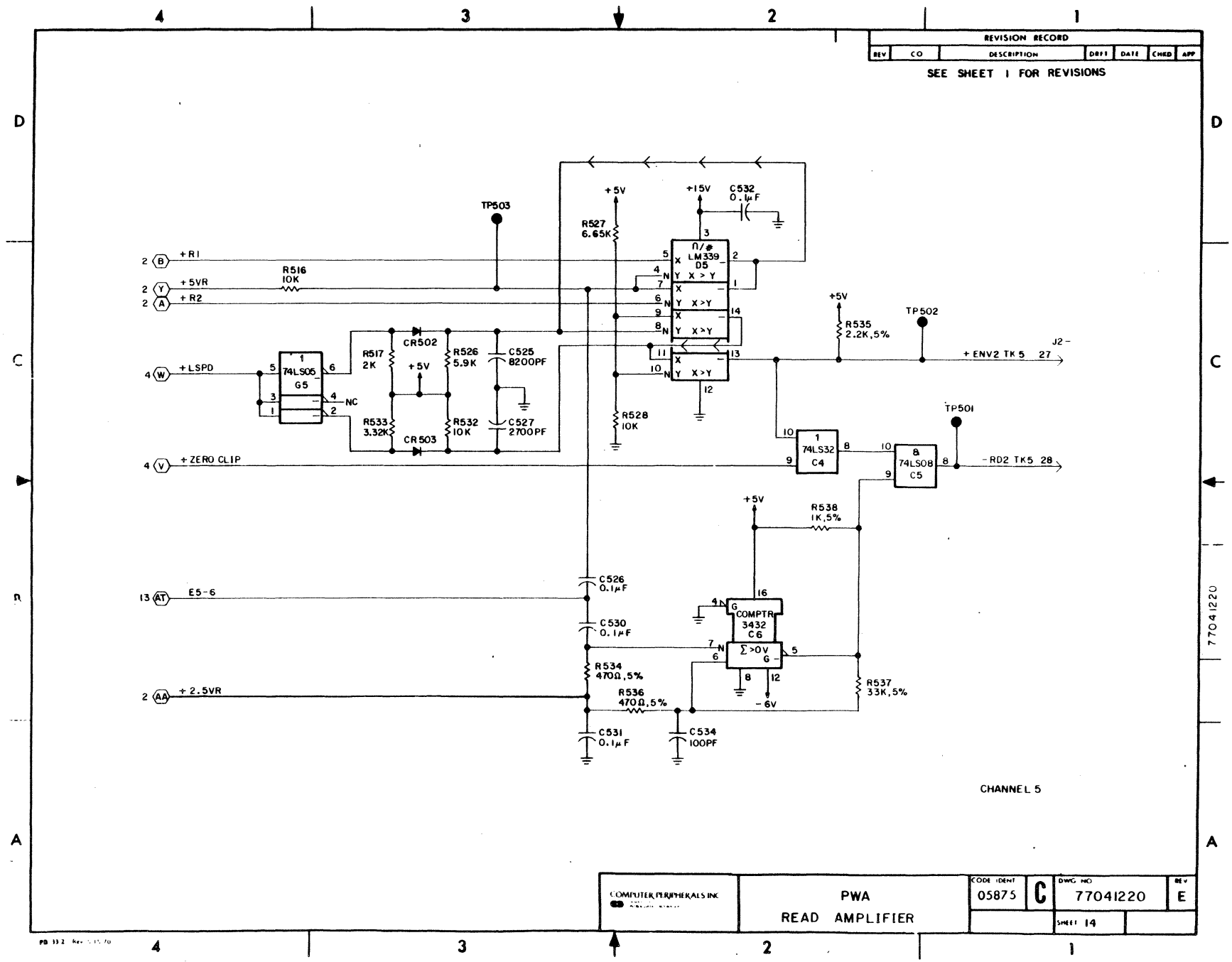
REVISION RECORD
REV CO DESCRIPTION DRFT DATE CHKD APP
SEE SHEET 1 FOR REVISIONS
TP503
+5V
+15V
C532 0.1µF
R527 6.65K
R516 10K
+R1
+5VR
+R2
LM339 D5
R528 10K
+5V
R535 2.2K,5%
TP502
+ENV2 TK5 27
J2-
+LSPD
74LS05 G5
NC
R517 2K
CR502
R526 5.9K
C525 8200PF
R533 3.32K
CR503
R532 10K
C527 2700PF
TP501
74LS32 C4
74LS08 C5
-RD2 TK5 28
+ZERO CLIP
R538 1K,5%
C526 0.1µF
E5-6
C530 0.1µF
COMPTR 3432 C6
R534 470Ω,5%
R536 470Ω,5%
R537 33K,5%
+2.5VR
-6V
C531 0.1µF
C534 100PF
CHANNEL 5
COMPUTER PERIPHERALS INC.
PWA
READ AMPLIFIER
CODE IDENT 05875
C
DWG NO 77041220
REV E
SHEET 14
77041220

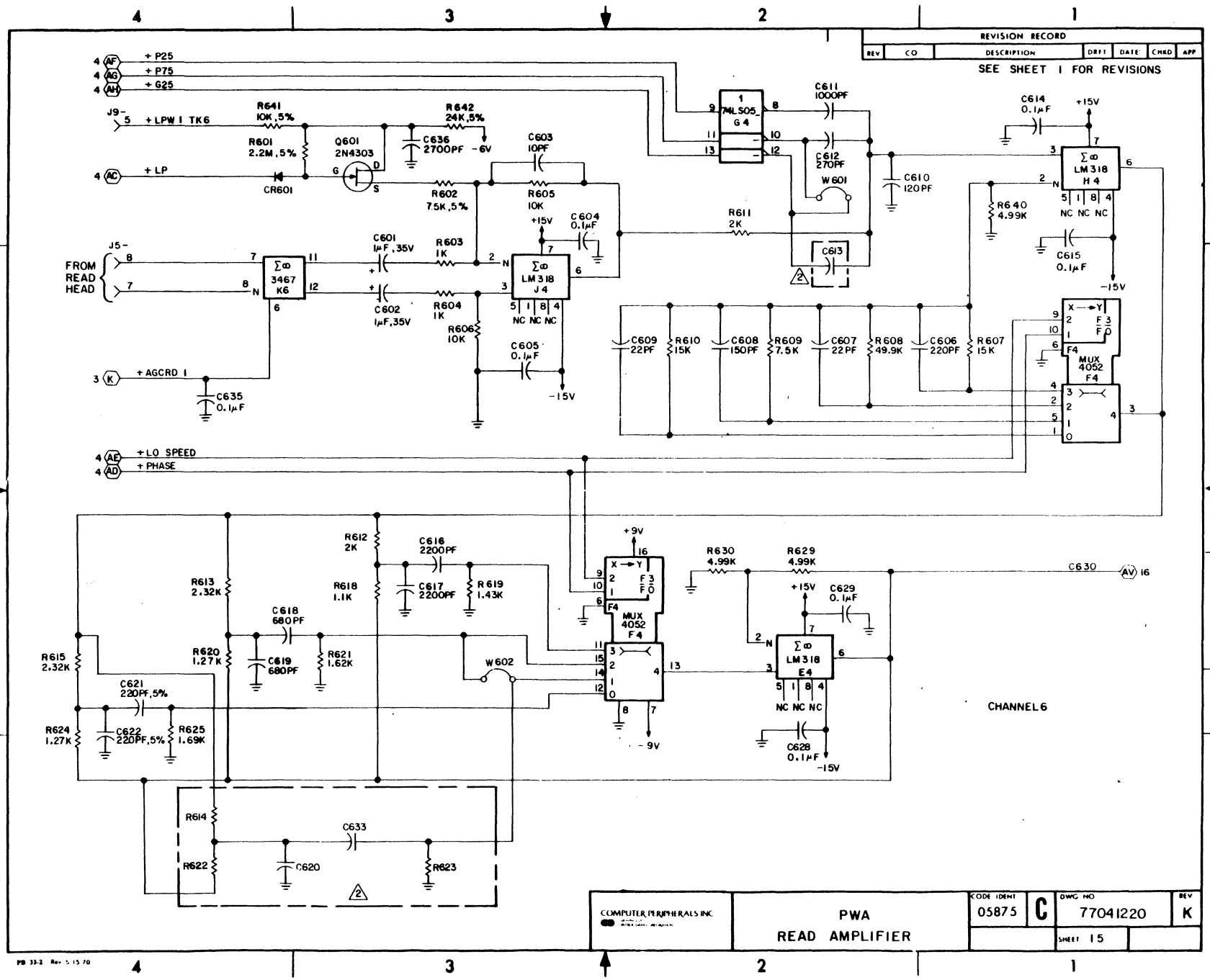
REVISION RECORD
REV | CO | DESCRIPTION | DRFT | DATE | CHKD | APP
SEE SHEET 1 FOR REVISIONS
+P25
+P75
+G25
+LPW I TK6
+LP
R641 10K,5%
R601 2.2M,5%
Q601 2N4303
CR601
R642 24K,5%
C636 2700PF -6V
R602 7.5K,5%
C603 10PF
R605 10K
74LS05 G4
C611 1000PF
C612 270PF
W601
C610 120PF
C614 0.1μF
+15V
ΣΩ LM318 H4
NC NC NC
C615 0.1μF
-15V
R640 4.99K
R611 2K
C613
FROM READ HEAD
ΣΩ 3467 K6
C601 1μF,35V
C602 1μF,35V
R603 1K
R604 1K
R606 10K
ΣΩ LM318 J4
C604 0.1μF
C605 0.1μF
C635 0.1μF
+AGCRD I
C609 22PF
R610 15K
C608 150PF
R609 7.5K
C607 22PF
R608 49.9K
C606 220PF
R607 15K
MUX 4052 F4
+LO SPEED
+PHASE
R612 2K
C616 2200PF
C617 2200PF
R619 1.43K
R613 2.32K
R618 1.1K
C618 680PF
C619 680PF
R620 1.27K
R621 1.62K
R615 2.32K
C621 220PF,5%
C622 220PF,5%
R624 1.27K
R625 1.69K
W602
+9V
-9V
R630 4.99K
R629 4.99K
C629 0.1μF
C628 0.1μF
C630
CHANNEL 6
R614
C633
R622
C620
R623
COMPUTER PERIPHERALS INC
PWA
READ AMPLIFIER
CODE IDENT 05875
C
DWG NO 77041220
REV K
SHEET 15
PB 33-2 Rev 5 15 70

| REVISION RECORD | | | | | | |
|---|---|---|---|---|---|---|
| REV | CO | DESCRIPTION | DRFT | DATE | CHKD | APP |

SEE SHEET 1 FOR REVISIONS

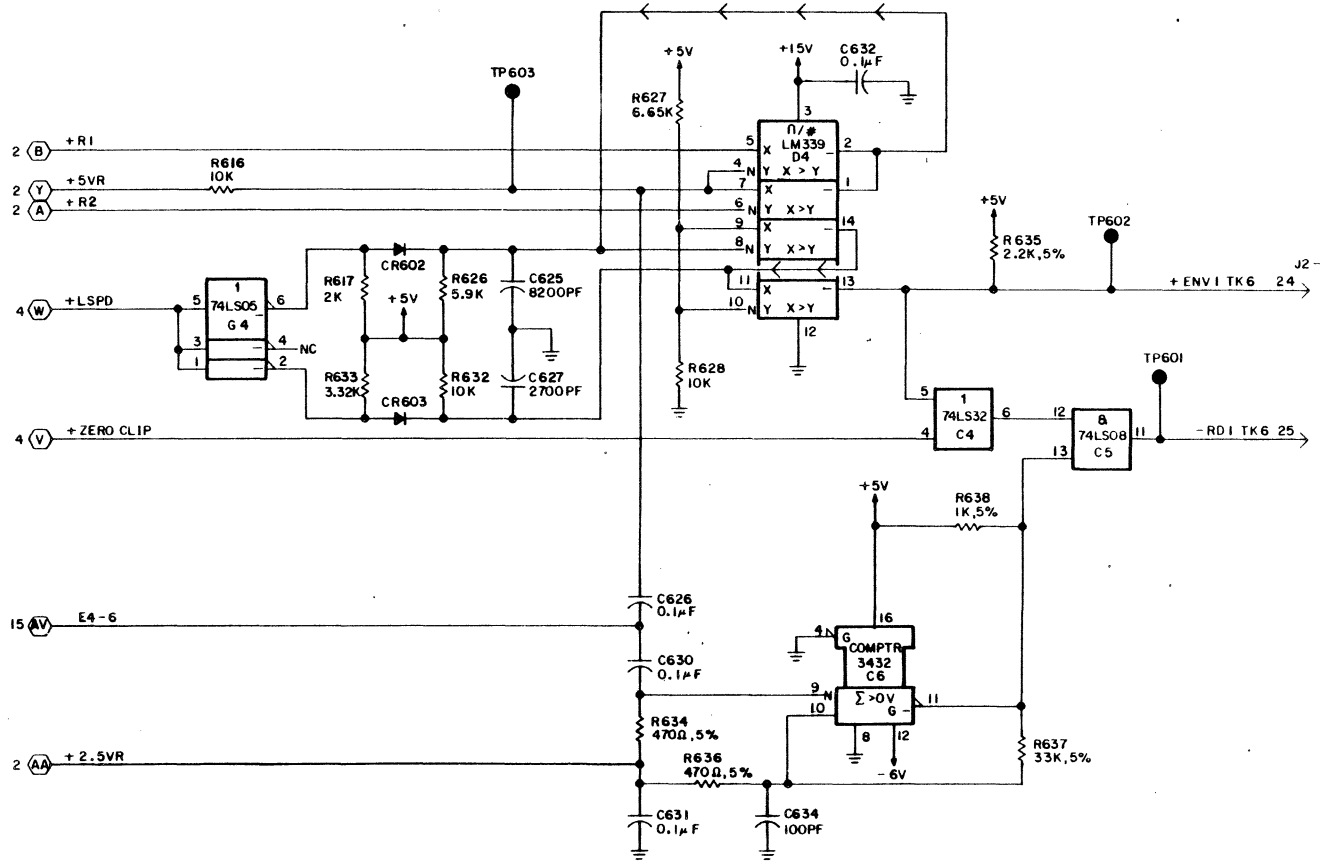


| | | | |
|---|---|---|---|
| COMPUTER PERIPHERALS INC. | PWA READ AMPLIFIER | CODE IDENT 05875 / C | DWG NO 77041220 / REV E |
| | | | SHEET 16 |

PB 33-2 Rev 5 15 70

77041220

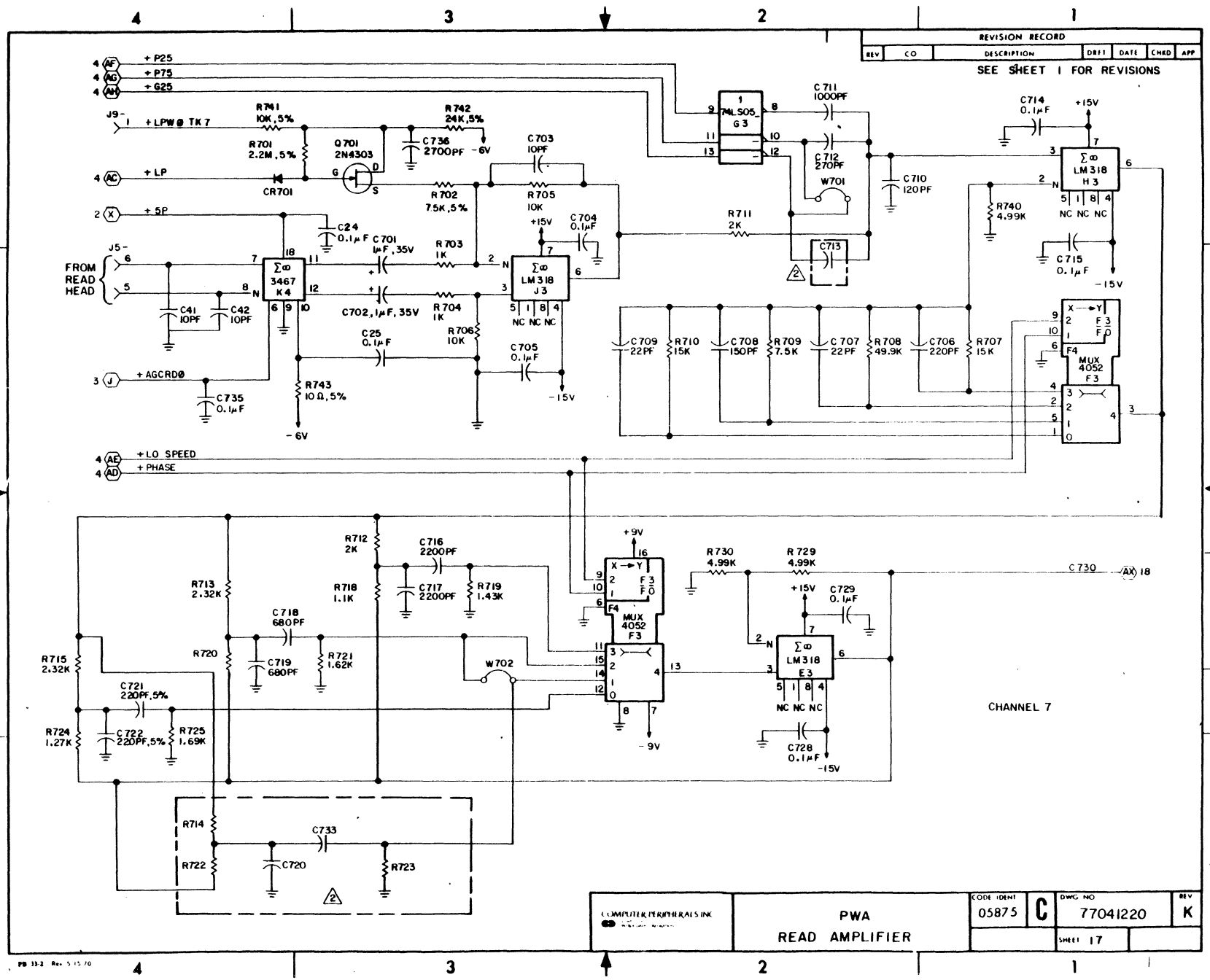
REVISION RECORD
REV | CO | DESCRIPTION | DRFT | DATE | CHKD | APP
SEE SHEET 1 FOR REVISIONS
+P25
+P75
+G25
+LPW@ TK7
+LP
+5P
+AGCRD@
+LO SPEED
+PHASE
FROM READ HEAD
R741 10K,5%
R742 24K,5%
R701 2.2M,5%
Q701 2N4303
CR701
C736 2700PF
R702 7.5K,5%
C703 10PF
R705 10K
C24 0.1μF
C701 1μF,35V
C702,1μF,35V
R703 1K
R704 1K
R706 10K
C25 0.1μF
C704 0.1μF
C705 0.1μF
C41 10PF
C42 10PF
C735 0.1μF
R743 10Ω,5%
C711 1000PF
C712 270PF
W701
C710 120PF
R711 2K
C713
C714 0.1μF
C715 0.1μF
R740 4.99K
C709 22PF
R710 15K
C708 150PF
R709 7.5K
C707 22PF
R708 49.9K
C706 220PF
R707 15K
R712 2K
C716 2200PF
C717 2200PF
R719 1.43K
R713 2.32K
R718 1.1K
C718 680PF
C719 680PF
R720
R721 1.62K
W702
R715 2.32K
C721 220PF,5%
C722 220PF,5%
R724 1.27K
R725 1.69K
R714
C733
C720
R722
R723
R730 4.99K
R729 4.99K
C729 0.1μF
C728 0.1μF
C730
CHANNEL 7
74LS05 G3
ΣΩ 3467 K4
ΣΩ LM318 J3
ΣΩ LM318 H3
ΣΩ LM318 E3
MUX 4052 F3
NC NC NC
+15V
-15V
+9V
-9V
-6V
COMPUTER PERIPHERALS INC
PWA
READ AMPLIFIER
CODE IDENT 05875
C
DWG NO 77041220
REV K
SHEET 17

| REVISION RECORD | | | | | | |
|---|---|---|---|---|---|---|
| REV | CO | DESCRIPTION | DRFT | DATE | CHKD | APP |

SEE SHEET 1 FOR REVISIONS

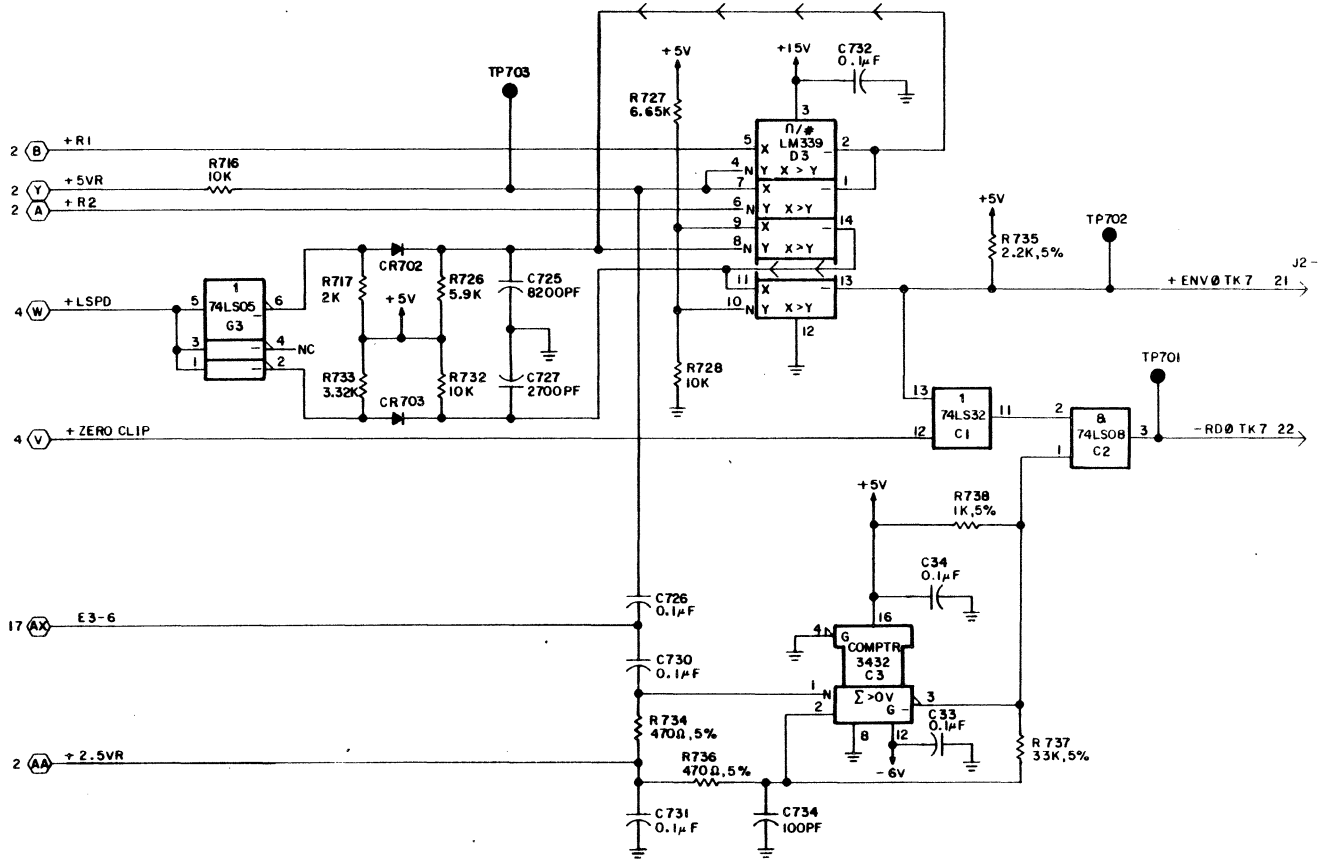


| COMPUTER PERIPHERALS INC. | PWA READ AMPLIFIER | CODE IDENT 05875 | C | DWG NO 77041220 | REV E |
|---|---|---|---|---|---|
| | | | | SHEET 18 | |

77041220

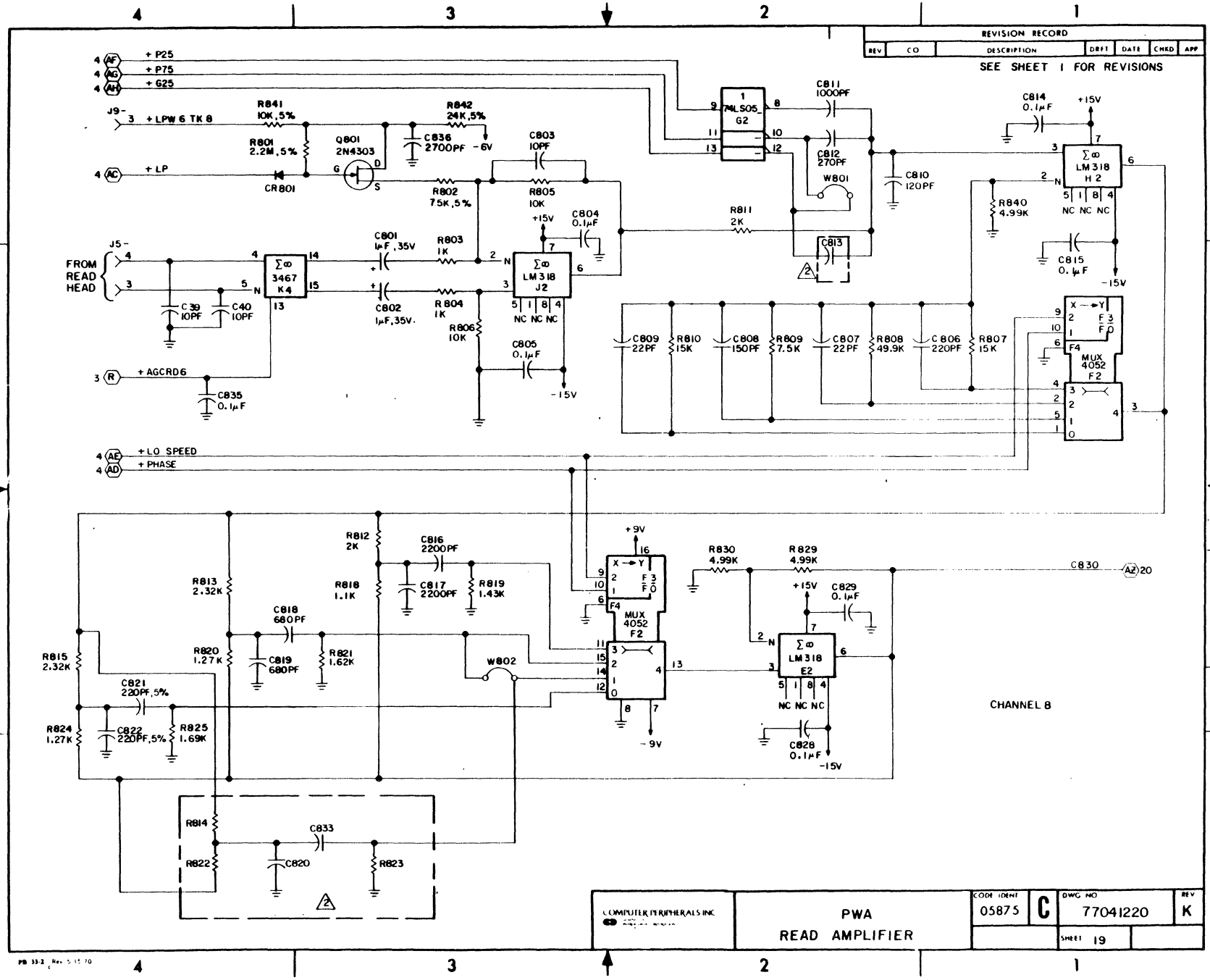
REVISION RECORD
REV | CO | DESCRIPTION | DRFT | DATE | CHKD | APP
SEE SHEET 1 FOR REVISIONS
+P25
+P75
+G25
+LPW 6 TK 8
+LP
R841 10K,5%
R842 24K,5%
R801 2.2M,5%
Q801 2N4303
C836 2700PF -6V
CR801
C803 10PF
R802 7.5K,5%
R805 10K
C804 0.1μF
C811 1000PF
C812 270PF
W801
C810 120PF
R811 2K
C813
C814 0.1μF
+15V
LM318 H2
NC NC NC
R840 4.99K
C815 0.1μF
-15V
FROM READ HEAD
3467 K4
C39 10PF
C40 10PF
C801 1μF,35V
C802 1μF,35V
R803 1K
R804 1K
R806 10K
LM318 J2
C805 0.1μF
C835 0.1μF
+AGCRD6
C809 22PF
R810 15K
C808 150PF
R809 7.5K
C807 22PF
R808 49.9K
C806 220PF
R807 15K
MUX 4052 F2
+LO SPEED
+PHASE
R812 2K
C816 2200PF
R818 1.1K
C817 2200PF
R819 1.43K
R813 2.32K
C818 680PF
R820 1.27K
C819 680PF
R821 1.62K
W802
R815 2.32K
C821 220PF,5%
R824 1.27K
C822 220PF,5%
R825 1.69K
+9V
-9V
R830 4.99K
R829 4.99K
C829 0.1μF
C828 0.1μF
C830
CHANNEL B
R814
R822
C833
C820
R823
COMPUTER PERIPHERALS INC.
PWA
READ AMPLIFIER
CODE IDENT 05875
C
DWG NO 77041220
REV K
SHEET 19
77041220

| REVISION RECORD | | | | | | |
|---|---|---|---|---|---|---|
| REV | CO | DESCRIPTION | DRFT | DATE | CHKD | APP |

SEE SHEET 1 FOR REVISIONS

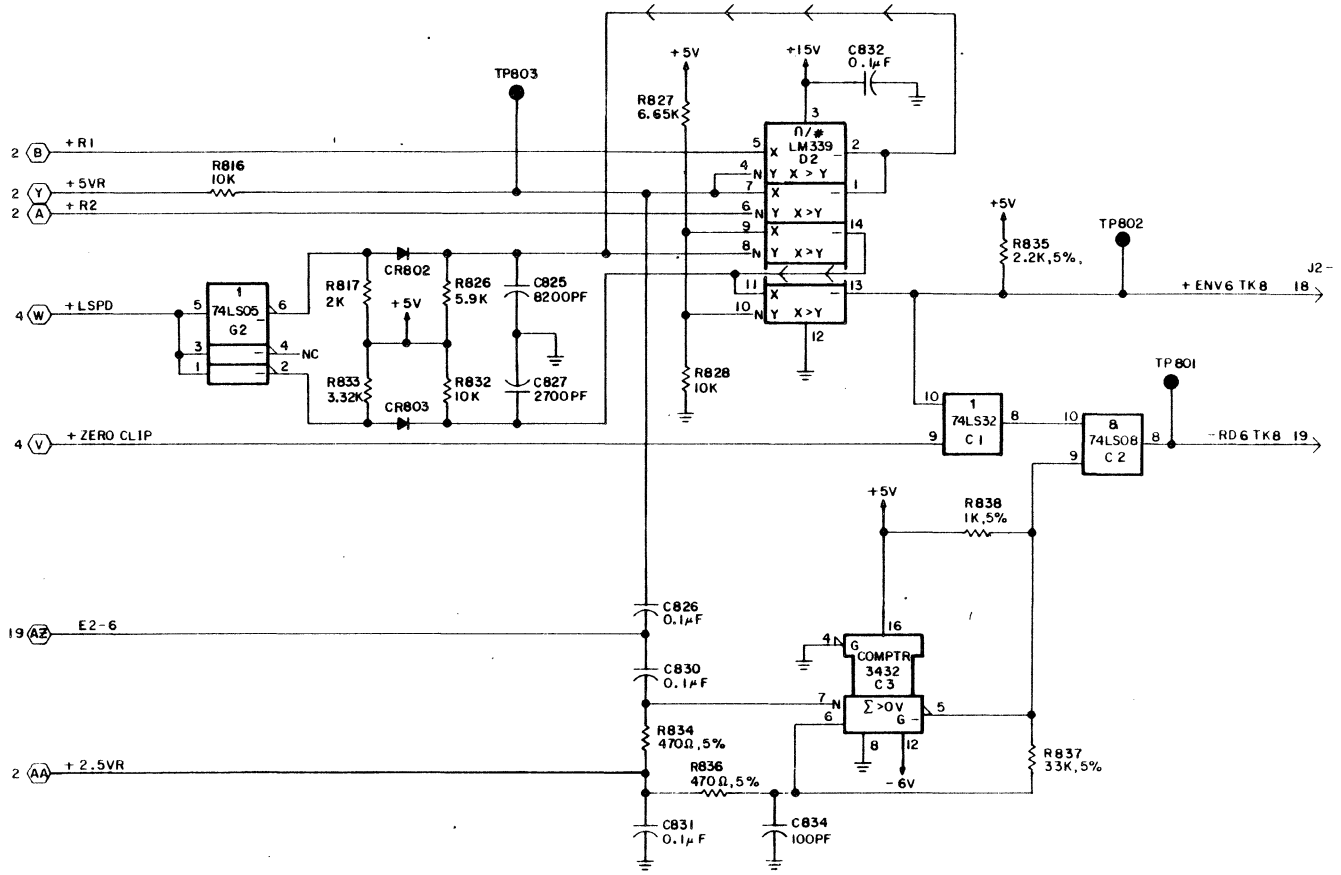


CHANNEL 8

| | | | | |
|---|---|---|---|---|
| COMPUTER PERIPHERALS INC | PWA READ AMPLIFIER | CODE IDENT 05875 | C | DWG NO 77041220 REV E |
| | | | | SHEET 20 |

77041220

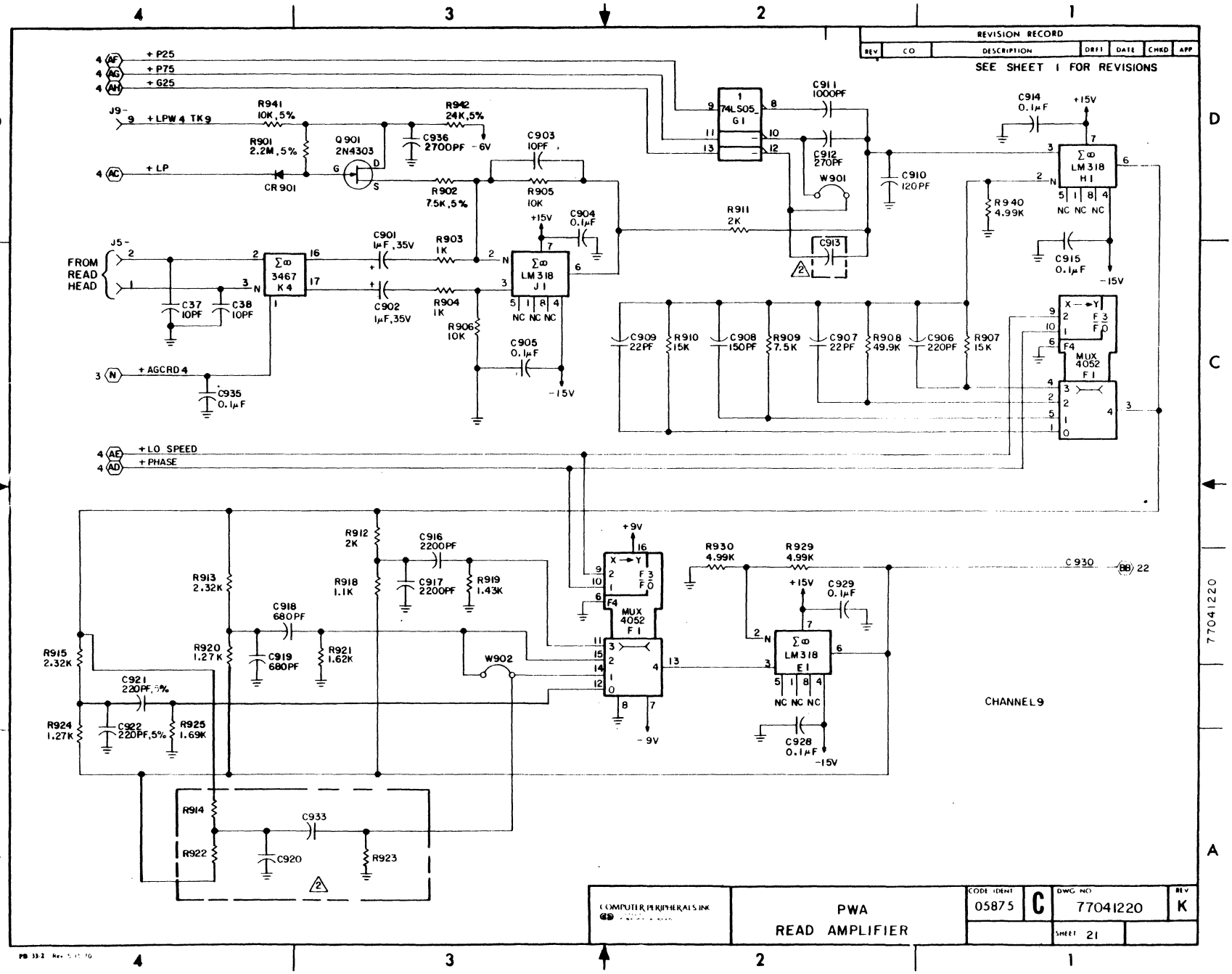
REVISION RECORD
REV | CO | DESCRIPTION | DRFT | DATE | CHKD | APP
SEE SHEET 1 FOR REVISIONS
+P25
+P75
+G25
+LP
+LPW4 TK9
+AGCRD4
+LO SPEED
+PHASE
FROM READ HEAD
R941 10K,5%
R942 24K,5%
R901 2.2M,5%
Q901 2N4303
CR901
C936 2700PF
R902 7.5K,5%
R905 10K
C903 10PF
C904 0.1µF
C901 1µF,35V
C902 1µF,35V
R903 1K
R904 1K
R906 10K
C905 0.1µF
C935 0.1µF
C37 10PF
C38 10PF
3467 K4
LM318 J1
74LS05 G1
C911 1000PF
C912 270PF
W901
C913
C910 120PF
R911 2K
C914 0.1µF
C915 0.1µF
LM318 H1
R940 4.99K
NC NC NC
C909 22PF
R910 15K
C908 150PF
R909 7.5K
C907 22PF
R908 49.9K
C906 220PF
R907 15K
MUX 4052 F1
R912 2K
C916 2200PF
C917 2200PF
R919 1.43K
R913 2.32K
R918 1.1K
C918 680PF
C919 680PF
R921 1.62K
R920 1.27K
W902
R915 2.32K
C921 220PF,5%
C922 220PF,5%
R924 1.27K
R925 1.69K
R914
C933
C920
R922
R923
R930 4.99K
R929 4.99K
C929 0.1µF
LM318 E1
C928 0.1µF
C930
CHANNEL 9
+15V
-15V
+9V
-9V
COMPUTER PERIPHERALS INC
PWA
READ AMPLIFIER
CODE IDENT 05875
C
DWG NO 77041220
REV K
SHEET 21
77041220

| REVISION RECORD | | | | | | |
|---|---|---|---|---|---|---|
| REV | CO | DESCRIPTION | DRFT | DATE | CHKD | APP |

SEE SHEET 1 FOR REVISIONS

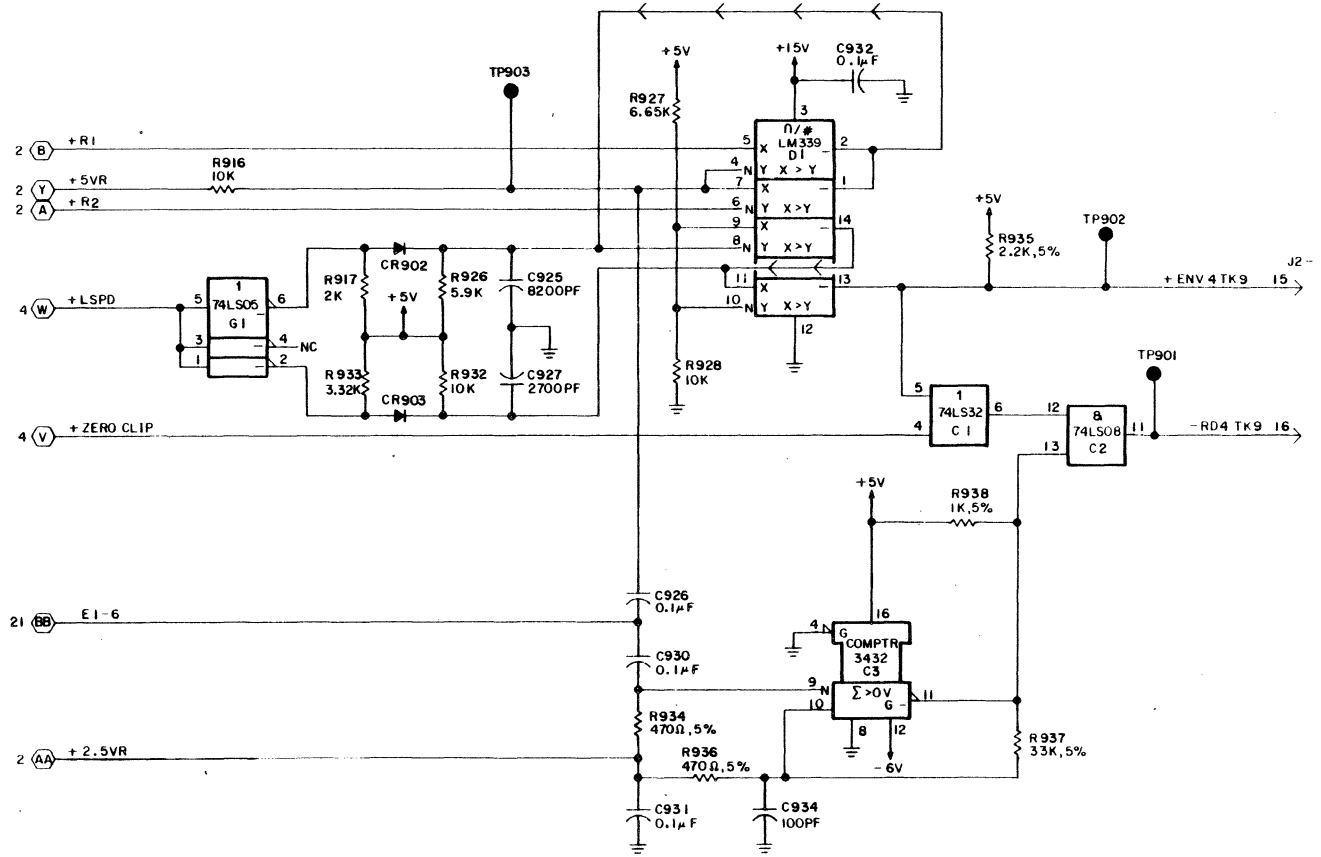


| | | | | |
|---|---|---|---|---|
| COMPUTER PERIPHERALS INC | PWA READ AMPLIFIER | CODE IDENT 05875 | C | DWG NO 77041220 REV E |
| | | | | SHEET 22 |

77041220

| REVISION RECORD | | | | | | |
|---|---|---|---|---|---|---|
| REV | CO | DESCRIPTION | DRFT | DATE | CHKD | APP |

SEE SHEET 1 FOR REVISIONS

| J3- | | J6- |
|---|---|---|
| 2 | +WD5 TK1 | 2 |
| 3 | +WD7 TK2 | 3 |
| 5 | +WD3 TK3 | 5 |
| 6 | +WDP TK4 | 6 |
| 8 | +WD2 TK5 | 8 |
| 9 | +WD1 TK6 | 9 |
| 11 | +WDØ TK7 | 11 |
| 12 | +WD6 TK8 | 12 |
| 14 | +WD4 TK9 | 14 |
| 15 | +FILE PRO | 15 |
| 17 | +REWIND | 17 |
| 18 | SPARE | 18 |
| 20 | -WD STROBE | 20 |
| 21 | -WRITE | 21 |
| 22 | -ERASE | 22 |
| 23 | -WROR DEG | 23 |
| 25 | -CLR WDR | 25 |
| 26 | -ER CUR | 26 |
| 27 | -WR CUR | 27 |

77041220

COMPUTER PERIPHERALS INC

PWA
READ AMPLIFIER

| CODE IDENT | | DWG NO | REV |
|---|---|---|---|
| 05875 | C | 77041220 | A |
| | | SHEET 23 | |

PB 33-2 Rev 5 15 70

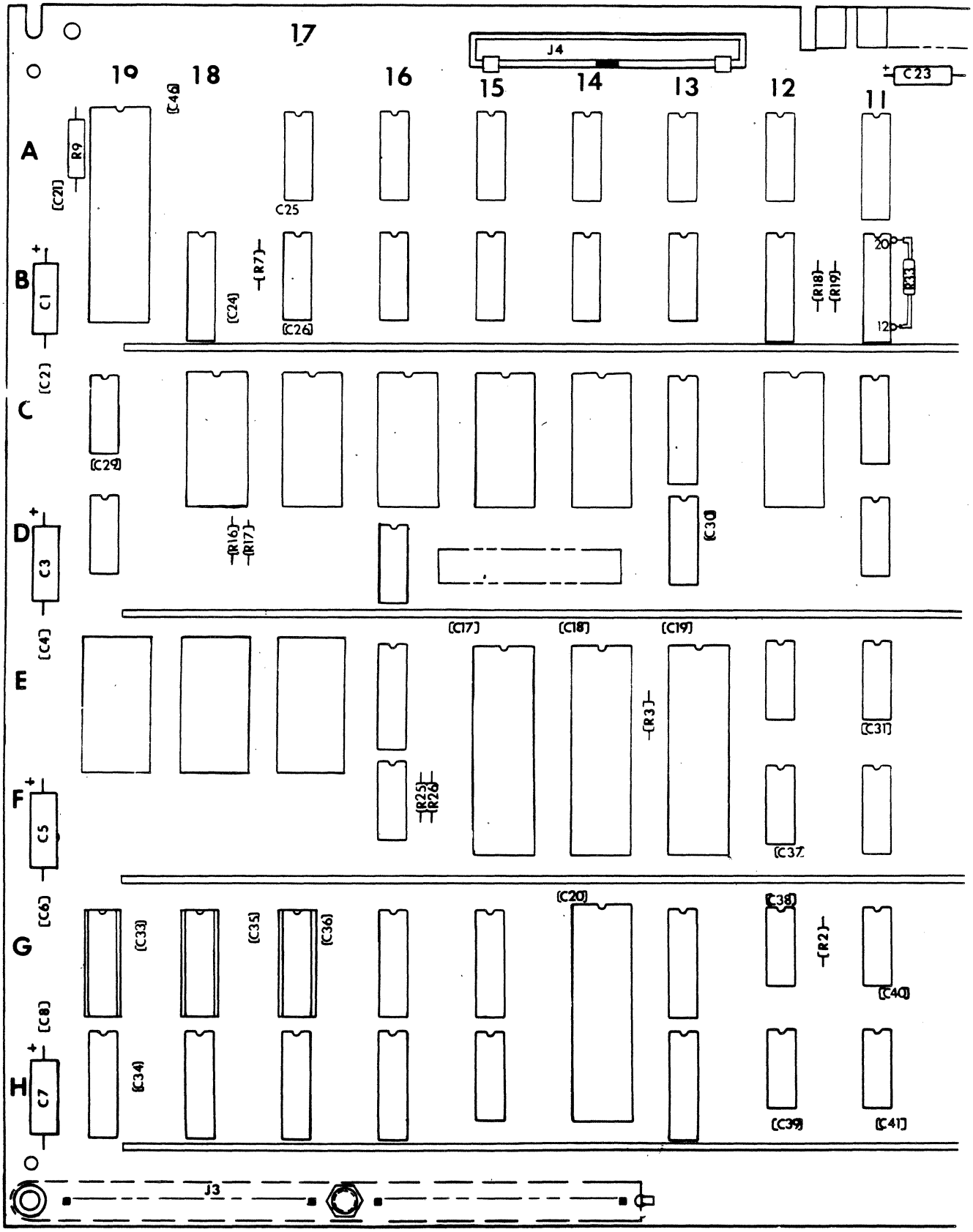


FORMATTER WRITE PWA

SHEET 1A

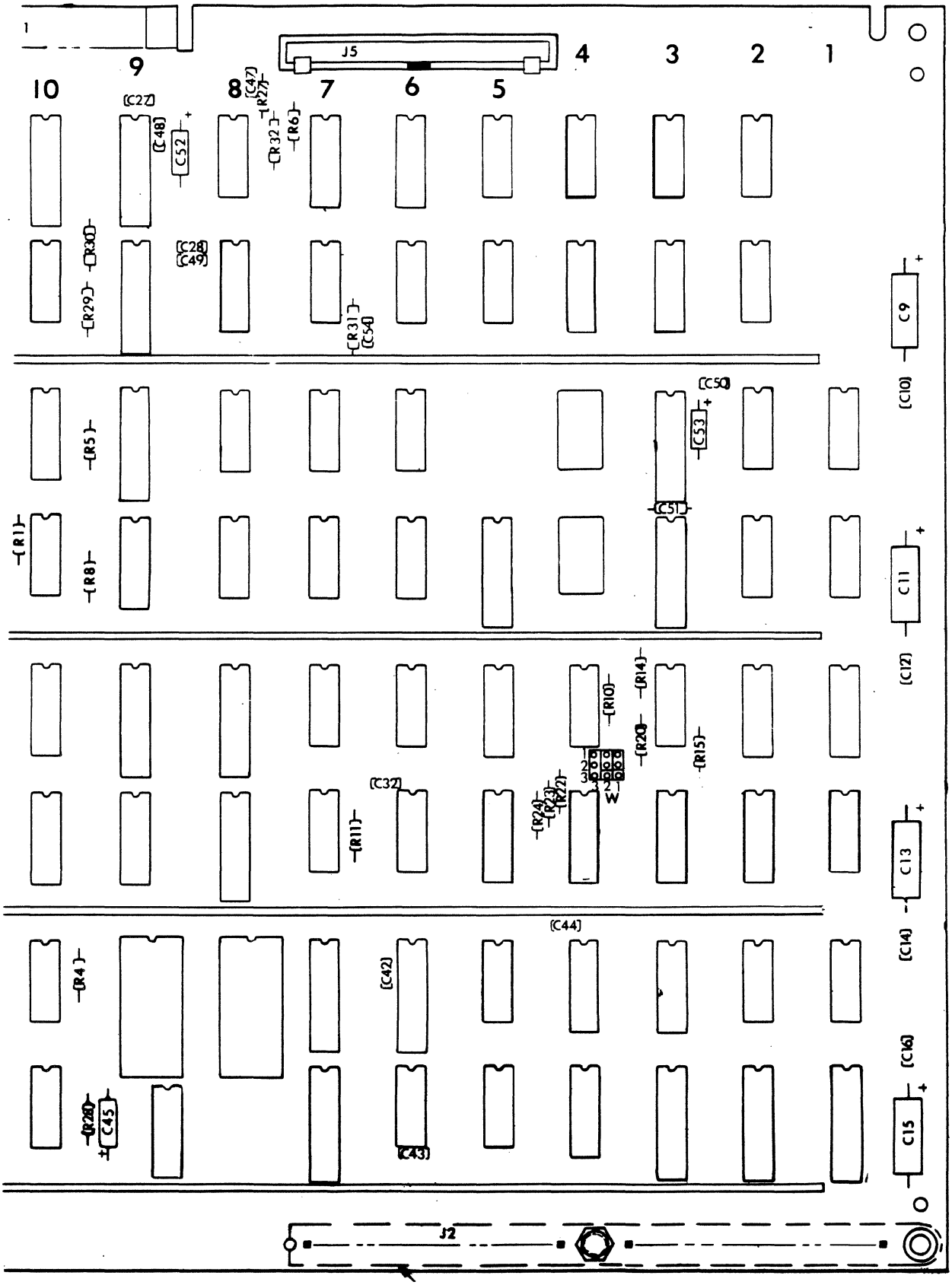


FORMATTER WRITE PWA

SHEET 1B

| REVISION RECORD | | | | | | |
|---|---|---|---|---|---|---|
| REV | CO | DESCRIPTION | DRFT | DATE | CHKD | APP |

SEE SHEET 1 FOR REVISIONS

| IC ELEMENTS NOT USED | | |
|---|---|---|
| TYPE | LOC | OUTPUTS |
| 74H21 | D16 | 8 |
| | A4 | 8 |
| 74S04 | C19 | 2 |
| 74LS04 | E4 | 10 |
| 74S10 | G11 | 6 |
| 74S32 | F6 | 8,11 |
| 7438 | C2 | 6,8,11 |
| 74LS86 | F1 | 3,8,11 |

| REFERENCE DESIGNATIONS | |
|---|---|
| LAST USED | NOT USED |
| R33 | R21,R9 R12,R13 |
| C54 | C22 |
| JD | |

J1- NC, NC, +5V, +5V, GND, GND, NC

C1,C3,C5,C7,C9,C11,C13,C15 10μF,25V; C23 22μF 15V; C2,C4,C6,C8,C10,C12,C14,C16,C24 THRU C44,C46 0.1μF

-MCLR (JA) 16

+G (AD), +S3 (Y), +GSP (CC), -S3 (R), +D1 (U), +DØ (V) → 74LS51 D19 → 74S04 C19 → +DBSP (A) 6; -LGR (B) 5,12

+S2 (AE) → 74S10 G11 → -EGR (G) 4,5,11

-EGR (JD) 5

74S32 H11 → +I2 (H) 4; 74S08 H12 → +I3 (J) 4

74S04 H10 → 74S08 E11 → +DDI (K) 6

+DBDØ-DBD7,P (CH) → 2K+1 74LS280 E12 → +DBODD (D) 11; +DBEVN (C) 3,8,11

+MPUEN (FM) 16

+F2 (Z), +I1 (W), +I0 (X), -MPUCLK (FK) 13 → 74S32 G12 → -SEQ (L) 5; -ALUCLK (M) 6; +DDØ (N) 6

=1 74S86 F12 → +DBGP (E) 10,11

+EVEN (EM) 12, +FI (S) 3, +FØ (T) 3 → =1 → +ALU CARRY IN (F) 6

NOTE
UNLESS OTHERWISE SPECIFIED
ALL RESISTOR VALUES ARE IN OHMS, 5%, 1/4 W.

| COMPUTER PERIPHERALS INC. | FMTR / WRITE | CODE IDENT 05875 | C | DWG NO 77026110 | REV G |
|---|---|---|---|---|---|
| | | | | SHEET 2 | |

PB 33-2 Rev 5 15 70

77026110

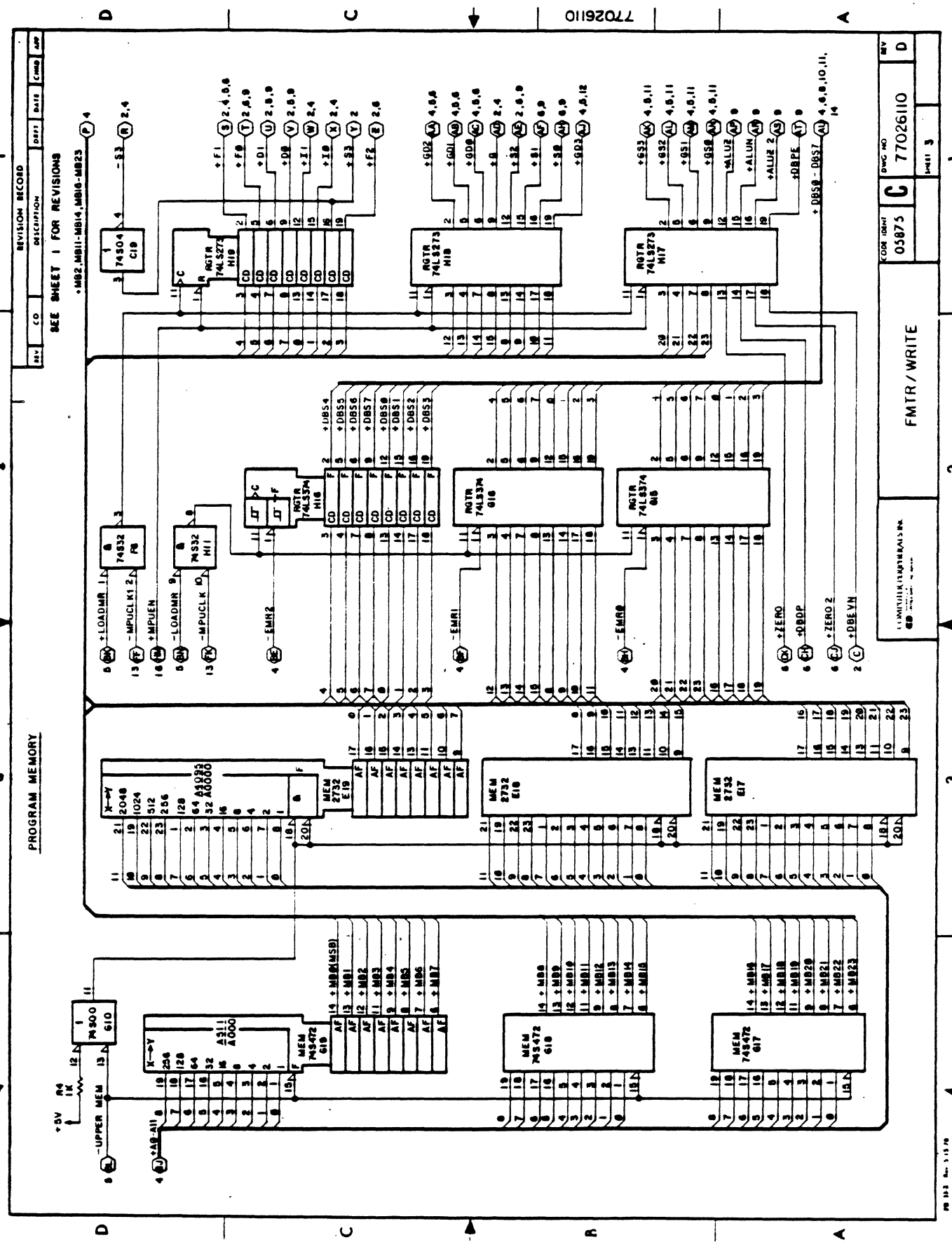
PROGRAM MEMORY
REVISION RECORD
SEE SHEET 1 FOR REVISIONS
FMTR/WRITE
77026110
05875
C
D
SHEET 3

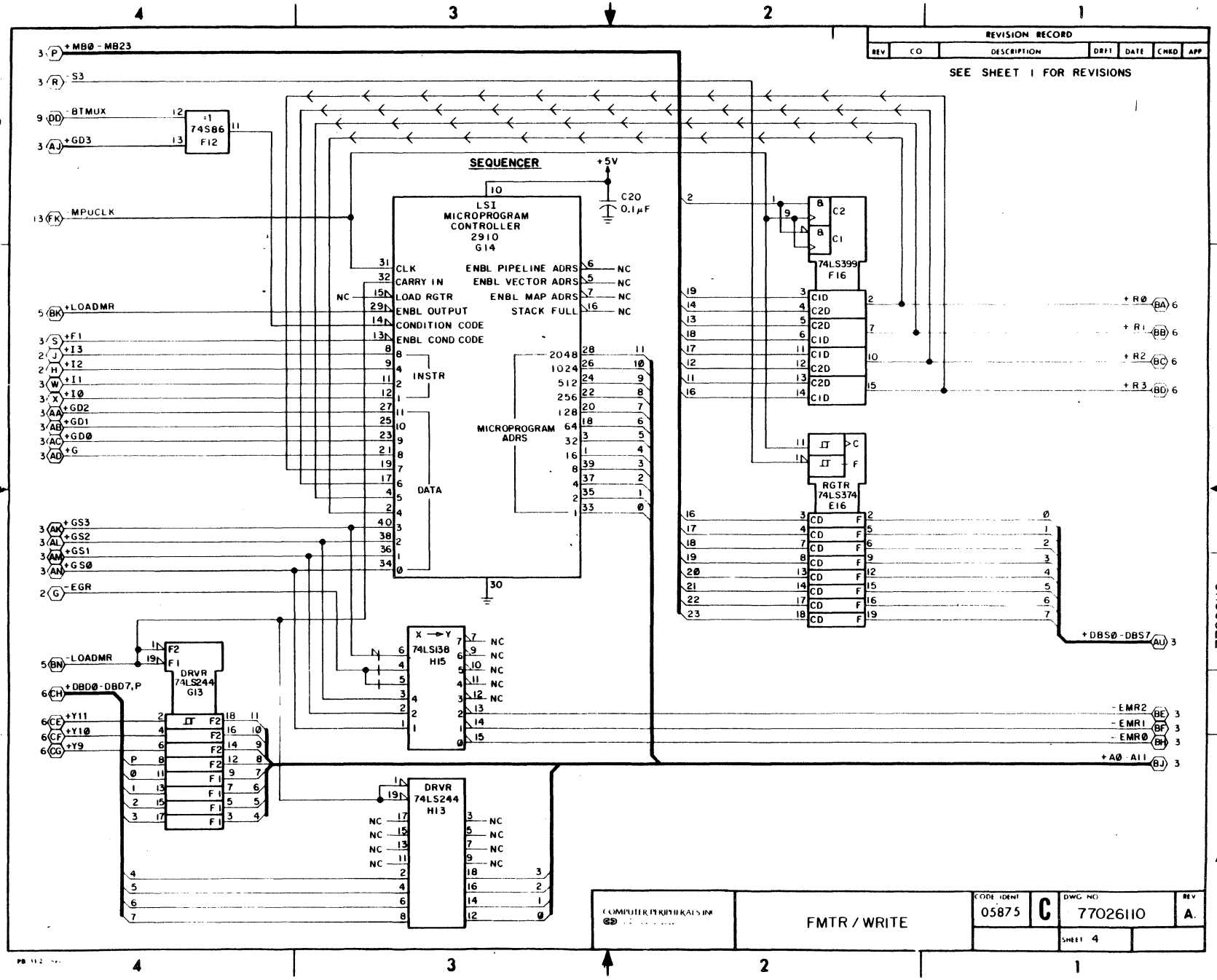
REVISION RECORD
REV | CO | DESCRIPTION | DRFT | DATE | CHKD | APP
SEE SHEET 1 FOR REVISIONS
SEQUENCER
+5V
C20 0.1µF
LSI MICROPROGRAM CONTROLLER 2910 G14
CLK
CARRY IN
LOAD RGTR
ENBL OUTPUT
CONDITION CODE
ENBL COND CODE
ENBL PIPELINE ADRS
ENBL VECTOR ADRS
ENBL MAP ADRS
STACK FULL
INSTR
DATA
MICROPROGRAM ADRS
+MB0 - MB23
S3
BTMUX
+GD3
=1 74S86 F12
MPUCLK
+LOADMR
+F1
+I3
+I2
+I1
+I0
+GD2
+GD1
+GD0
+G
+GS3
+GS2
+GS1
+GS0
-EGR
-LOADMR
+DBD0-DBD7,P
DRVR 74LS244 G13
DRVR 74LS244 H13
X→Y 74LS138 H15
74LS399 F16
RGTR 74LS374 E16
+R0
+R1
+R2
+R3
+DBS0-DBS7
-EMR2
-EMR1
-EMR0
+A0 A11
COMPUTER PERIPHERALS INC
FMTR / WRITE
CODE IDENT 05875
C
DWG NO 77026110
REV A.
SHEET 4

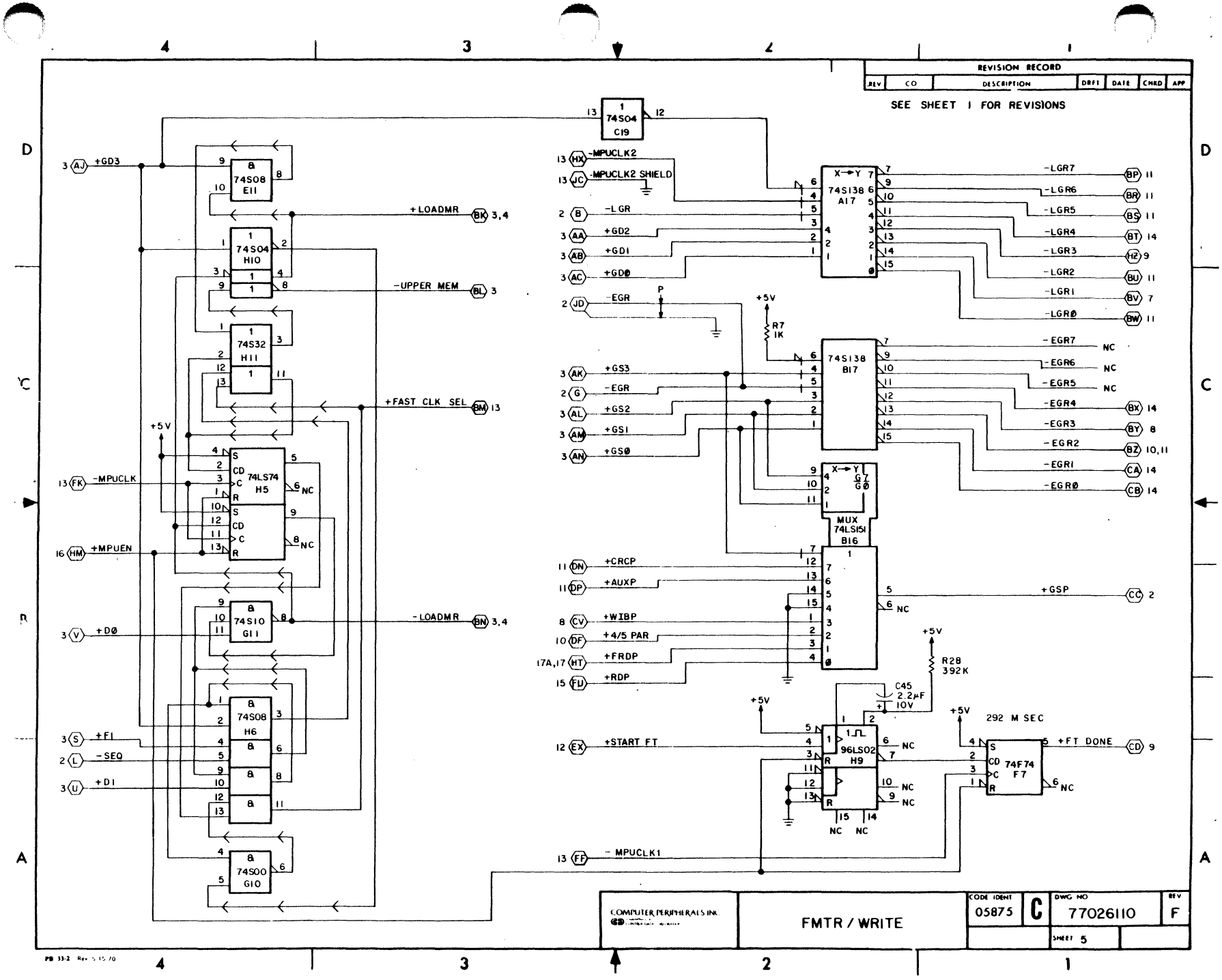
REVISION RECORD
REV | CO | DESCRIPTION | DRFT | DATE | CHKD | APP
SEE SHEET 1 FOR REVISIONS
74S04 C19
-MPUCLK2
-MPUCLK2 SHIELD
74S08 E11
+LOADMR
74S04 H10
-UPPER MEM
74S32 H11
+FAST CLK SEL
74LS74 H5
-MPUCLK
+MPUEN
74S10 G11
-LOADMR
+D0
74S08 H6
+FI
-SEQ
+DI
74S00 G10
74S138 A17
-LGR
+GD2
+GD1
+GD0
-EGR
-LGR7
-LGR6
-LGR5
-LGR4
-LGR3
-LGR2
-LGR1
-LGR0
R7 1K
74S138 B17
+GS3
+GS2
+GS1
+GS0
-EGR7
-EGR6
-EGR5
-EGR4
-EGR3
-EGR2
-EGR1
-EGR0
MUX 74LS151 B16
+CRCP
+AUXP
+WIBP
+4/5 PAR
+FRDP
+RDP
+GSP
R28 392K
C45 2.2µF 10V
96LS02 H9
+START FT
74F74 F7
+FT DONE
292 M SEC
-MPUCLK1
COMPUTER PERIPHERALS INC.
FMTR / WRITE
CODE IDENT 05875
C
DWG NO 77026110
REV F
SHEET 5

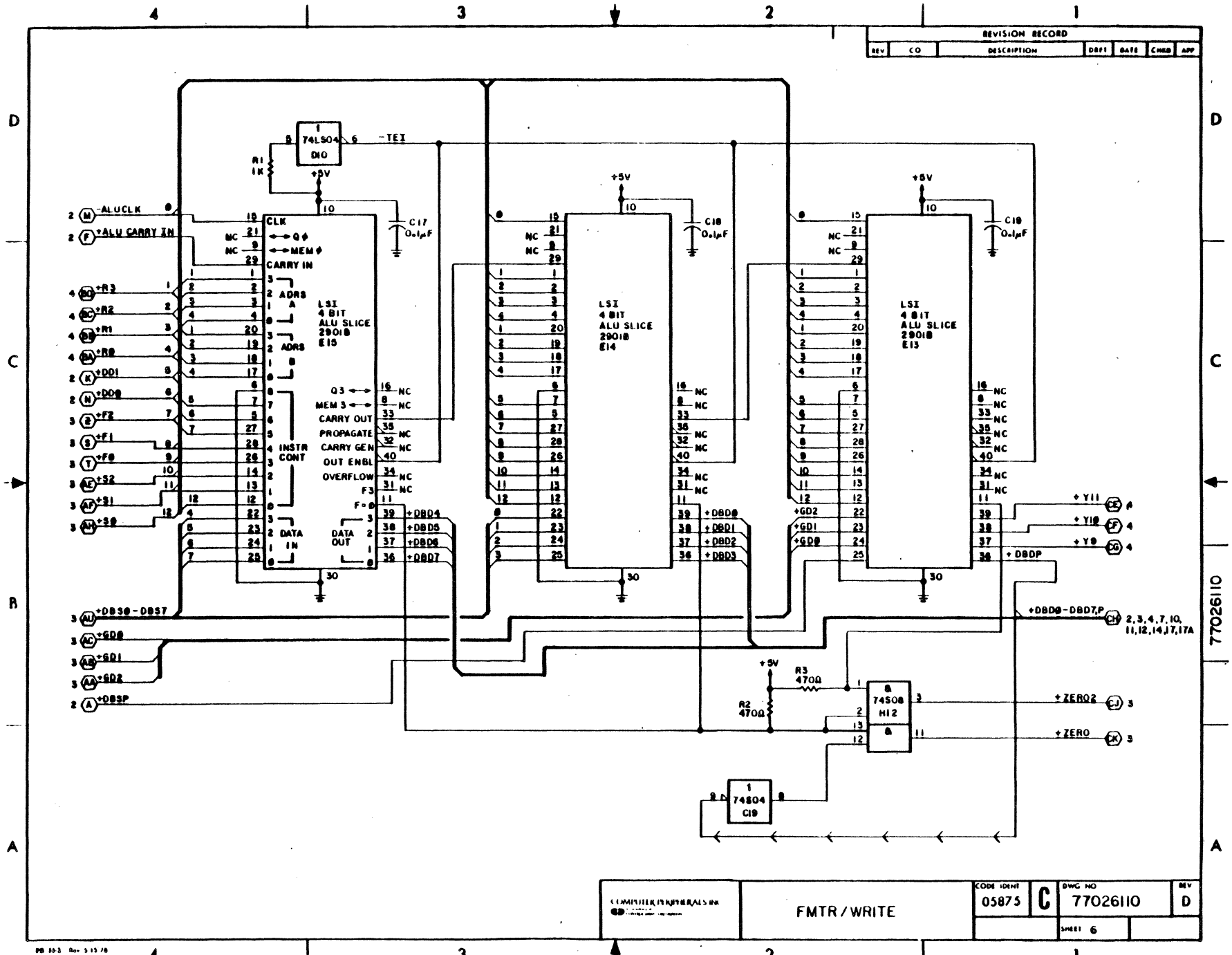
REVISION RECORD
REV
CO
DESCRIPTION
DRFT
DATE
CHKD
APP
74LS04 D10
-TEI
R1 1K
+5V
C17 0.1μF
C18 0.1μF
C19 0.1μF
-ALUCLK
+ALU CARRY IN
+R3
+R2
+R1
+R0
+DD1
+DD0
+F2
+F1
+F0
+S2
+S1
+S0
CLK
Q Φ
MEM Φ
CARRY IN
ADRS A
ADRS B
INSTR CONT
DATA IN
DATA OUT
LSI 4 BIT ALU SLICE 2901B E15
LSI 4 BIT ALU SLICE 2901B E14
LSI 4 BIT ALU SLICE 2901B E13
Q3
MEM 3
CARRY OUT
PROPAGATE
CARRY GEN
OUT ENBL
OVERFLOW
F3
F=0
NC
+DBD4
+DBD5
+DBD6
+DBD7
+DBD0
+DBD1
+DBD2
+DBD3
+GD2
+GD1
+GD0
+DBDP
+Y11
+Y10
+Y9
+DB30-DB37
+DBD0-DBD7,P
2,3,4,7,10, 11,12,14,17,17A
+GD0
+GD1
+GD2
+DBSP
+5V
R3 470Ω
R2 470Ω
74S08 H12
+ZERO2
+ZERO
74S04 C19
COMPUTER PERIPHERALS INC
FMTR/WRITE
CODE IDENT 05875
C
DWG NO 77026110
REV D
SHEET 6

77026110

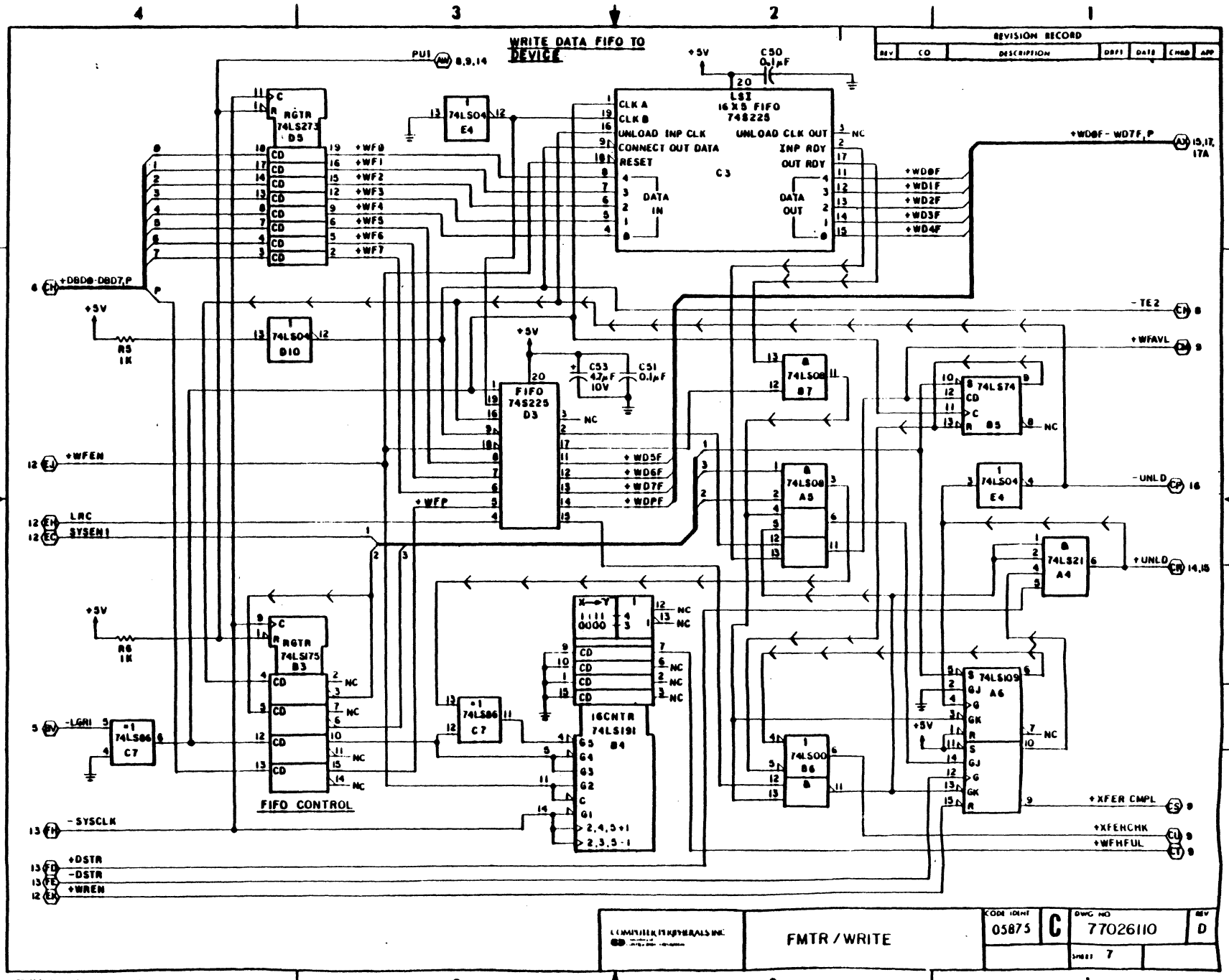
WRITE DATA FIFO TO DEVICE
REVISION RECORD
FIFO CONTROL
FMTR / WRITE
05875
77026110
SHEET 7

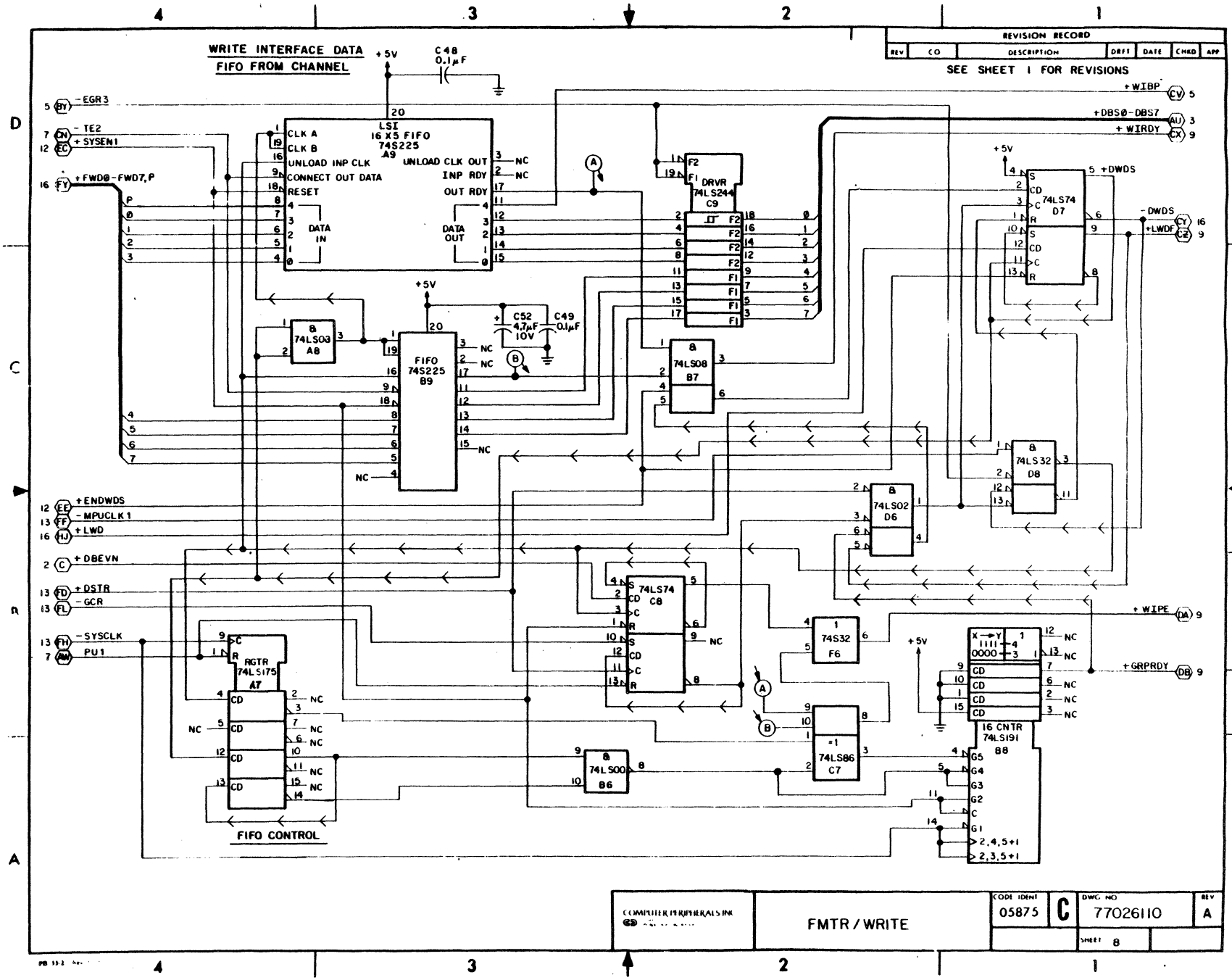
WRITE INTERFACE DATA
FIFO FROM CHANNEL
REVISION RECORD
SEE SHEET 1 FOR REVISIONS
LSI 16 X 5 FIFO 74S225 A9
FIFO 74S225 B9
DRVR 74LS244 C9
74LS74 D7
74LS32 D8
74LS02 D6
74LS08 B7
74LS03 A8
74LS74 C8
74S32 F6
74LS86 C7
74LS00 B6
RGTR 74LS175 A7
16 CNTR 74LS191 B8
C48 0.1µF
C52 4.7µF 10V
C49 0.1µF
FIFO CONTROL
-EGR3
-TE2
+SYSEN1
+FWD0-FWD7,P
+ENDWDS
-MPUCLK1
+LWD
+DBEVN
+DSTR
-GCR
-SYSCLK
PU1
+WIBP
+DBS0-DBS7
+WIRDY
+DWDS
-DWDS
+LWDF
+WIPE
+GRPRDY
FMTR / WRITE
COMPUTER PERIPHERALS INC
CODE IDENT 05875
C
DWG NO 77026110
REV A
SHEET 8

77026110

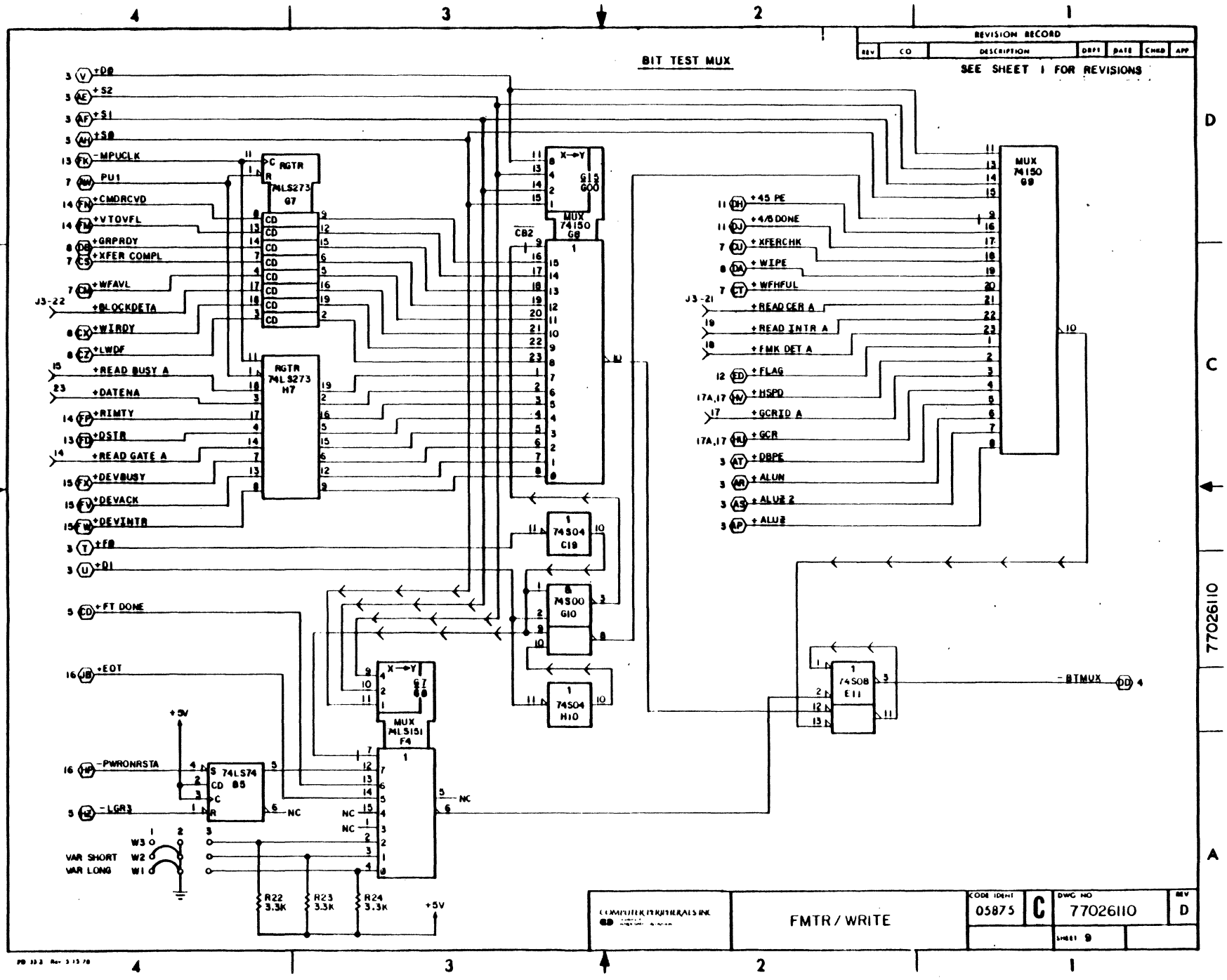
BIT TEST MUX
REVISION RECORD
SEE SHEET 1 FOR REVISIONS
+D0
+S2
+S1
+S0
-MPUCLK
PU1
+CMDRCVD
+VTOVFL
+GRPRDY
+XFER COMPL
+WFAVL
+BLOCKDETA
+WIRDY
+LWDF
+READ BUSY A
+DATENA
+RIMTY
+DSTR
+READ GATE A
+DEVBUSY
+DEVACK
+DEVINTR
+F0
+D1
+FT DONE
+EOT
-PWRONRSTA
-LGR3
+5V
VAR SHORT
VAR LONG
R22 3.3K
R23 3.3K
R24 3.3K
RGTR 74LS273 G7
RGTR 74LS273 H7
MUX 74150 G8
MUX 74150 G9
MUX 74LS151 F4
74S74 CD 85
74S04 C10
74S00 G10
74S04 H10
74S08 E11
+45 PE
+4/5 DONE
+XFERCHK
+WIPE
+WFHFUL
+READ CER A
+READ INTR A
+FMK DET A
+FLAG
+HSPD
+GCRID A
+GCR
+DBPE
+ALUN
+ALU≠0
+ALU≠2
-BTMUX
FMTR/WRITE
05875
C
77026110
D
SHEET 9

| REVISION RECORD | | | | | | |
|---|---|---|---|---|---|---|
| REV | CO | DESCRIPTION | DRFT | DATE | CHKD | APP |

SEE SHEET 1 FOR REVISIONS

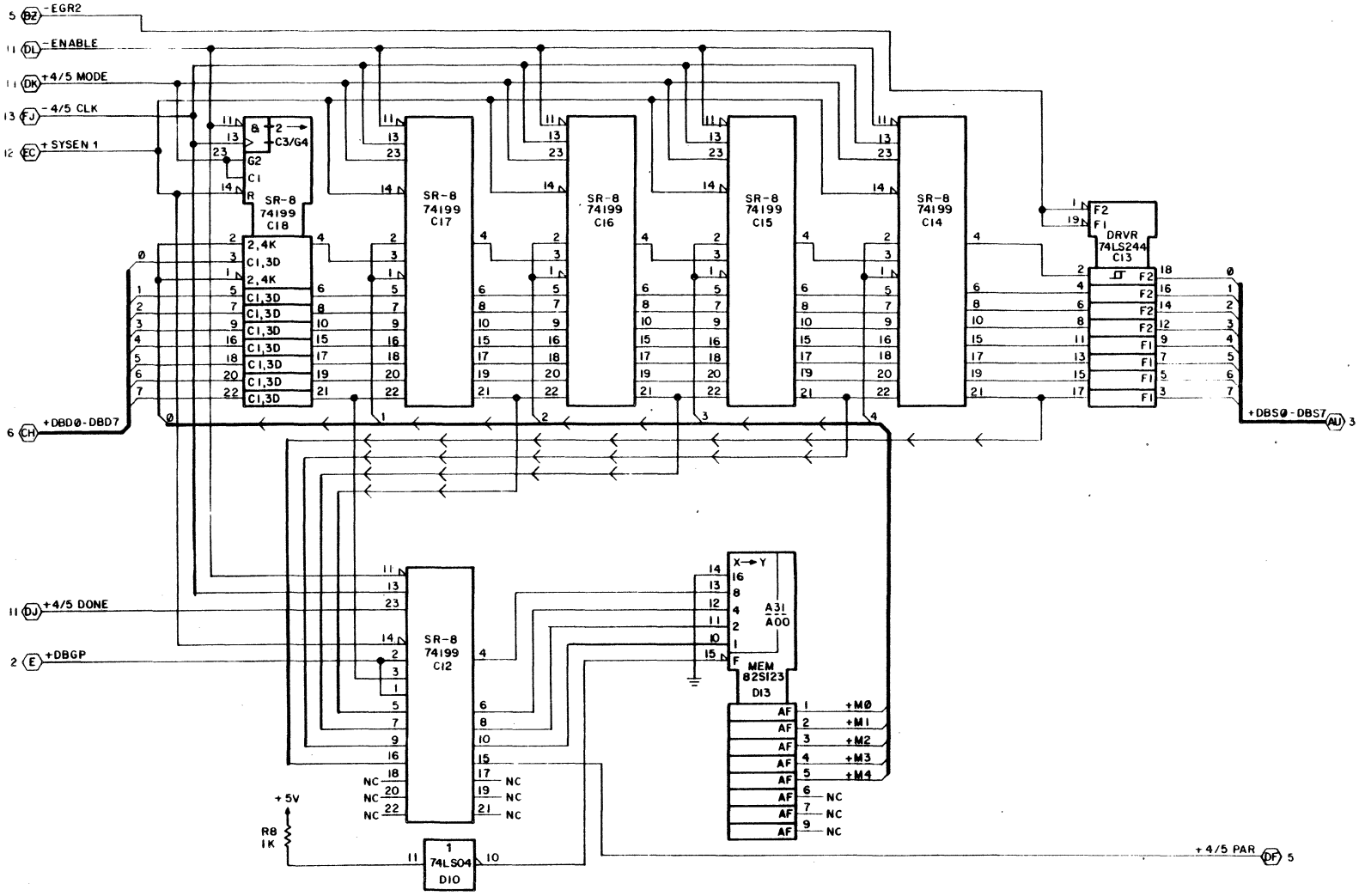


| COMPUTER PERIPHERALS INC | FMTR/WRITE | CODE IDENT 05875 | C | DWG NO 77026110 | REV A |
|---|---|---|---|---|---|
| | | | | SHEET 10 | |

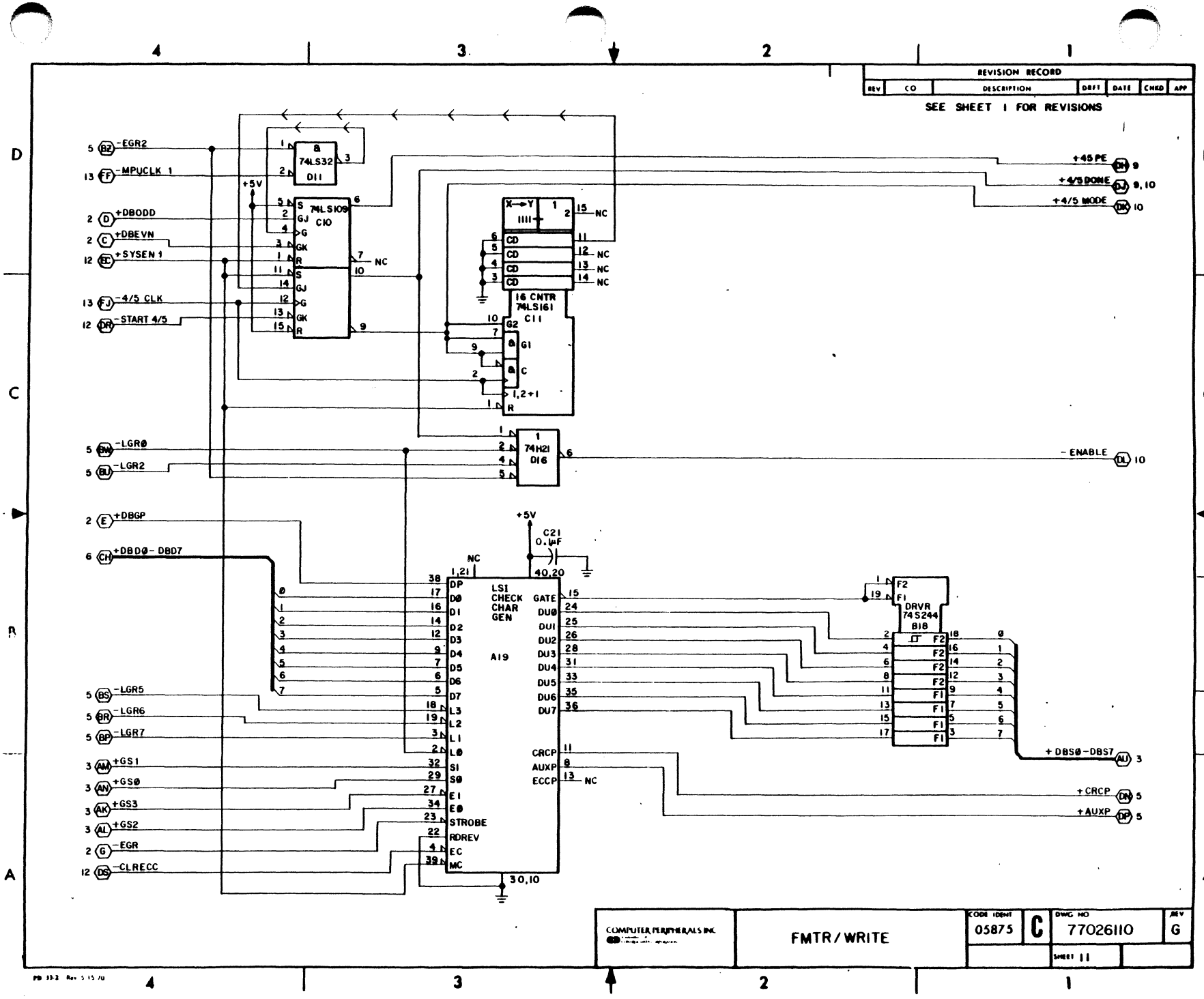
REVISION RECORD
REV CO DESCRIPTION DRFT DATE CHKD APP
SEE SHEET 1 FOR REVISIONS
-EGR2
-MPUCLK 1
+DBODD
+DBEVN
+SYSEN 1
-4/5 CLK
-START 4/5
+5V
74LS32 D11
74LS109 C10
16 CNTR 74LS161 C11
74H21 D16
+4/5 PE
+4/5 DONE
+4/5 MODE
- ENABLE
-LGR0
-LGR2
+DBGP
+DBD0- DBD7
C21 0.1µF
LSI CHECK CHAR GEN A19
DRVR 74S244 B18
-LGR5
-LGR6
-LGR7
+GS1
+GS0
+GS3
+GS2
-EGR
-CLRECC
+DBS0-DBS7
+CRCP
+AUXP
COMPUTER PERIPHERALS INC.
FMTR/WRITE
CODE IDENT 05875
C
DWG NO 77026110
REV G
SHEET 11

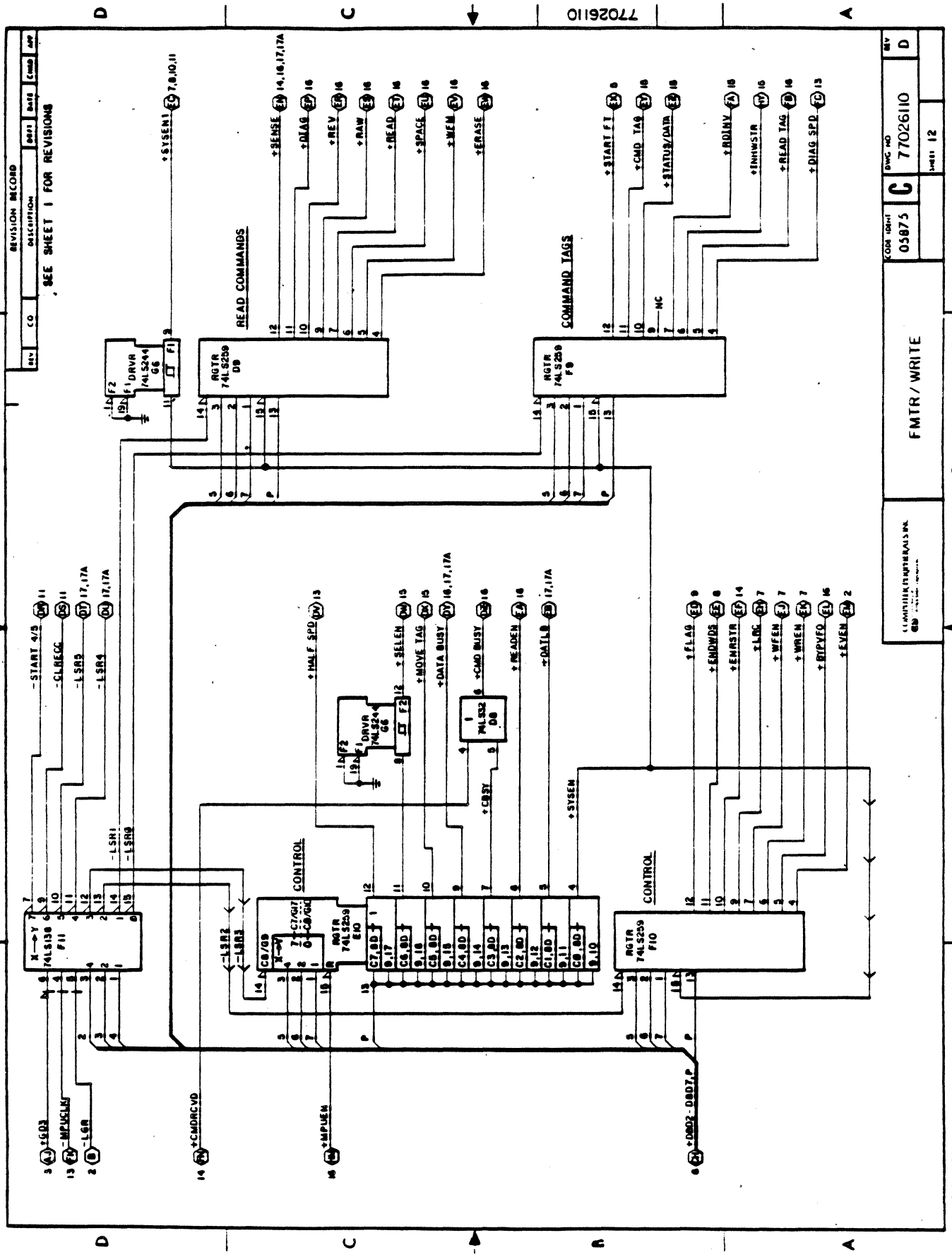
77026110
FMTR/WRITE
READ COMMANDS
COMMAND TAGS
CONTROL
CONTROL
REVISION RECORD
SEE SHEET 1 FOR REVISIONS
DWG NO 77026110
SHEET 12
REV D

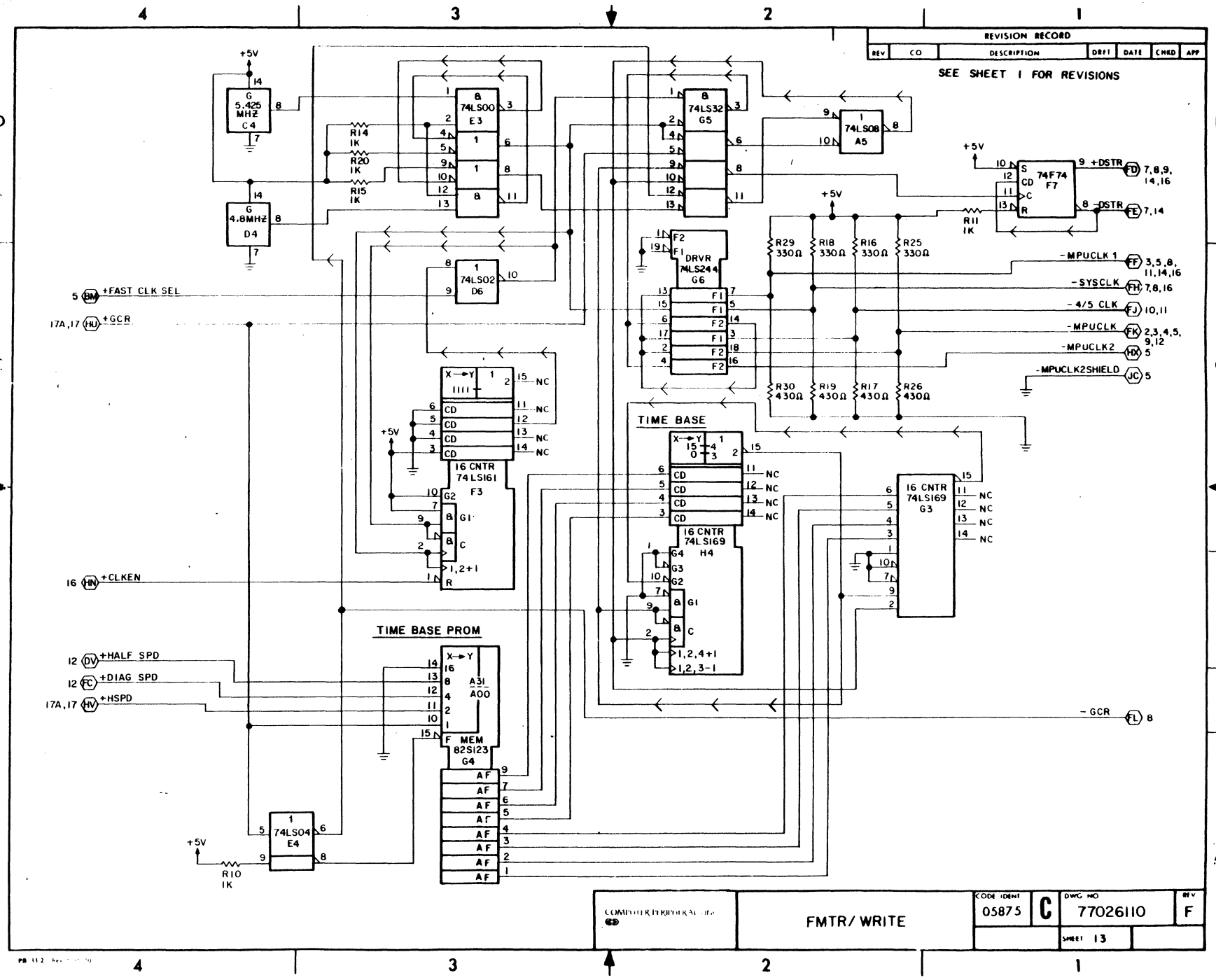
REVISION RECORD
REV | CO | DESCRIPTION | DRFT | DATE | CHKD | APP
SEE SHEET 1 FOR REVISIONS
+5V
G 5.425 MHZ C4
G 4.8MHZ D4
R14 1K
R20 1K
R15 1K
8 74LS00 E3
1 74LS02 D6
8 74LS32 G5
1 74LS08 A5
74F74 F7
R11 1K
DRVR 74LS244 G6
R29 330Ω
R18 330Ω
R16 330Ω
R25 330Ω
R30 430Ω
R19 430Ω
R17 430Ω
R26 430Ω
+FAST CLK SEL
+GCR
+CLKEN
+HALF SPD
+DIAG SPD
+HSPD
-MPUCLK 1
-SYSCLK
-4/5 CLK
-MPUCLK
-MPUCLK2
-MPUCLK2SHIELD
+DSTR
-DSTR
-GCR
TIME BASE
16 CNTR 74LS161 F3
16 CNTR 74LS169 H4
16 CNTR 74LS169 G3
TIME BASE PROM
F MEM 82S123 G4
1 74LS04 E4
R10 1K
COMPUTER TERMINAL CORP.
FMTR/ WRITE
CODE IDENT 05875
C
DWG NO 77026110
REV F
SHEET 13

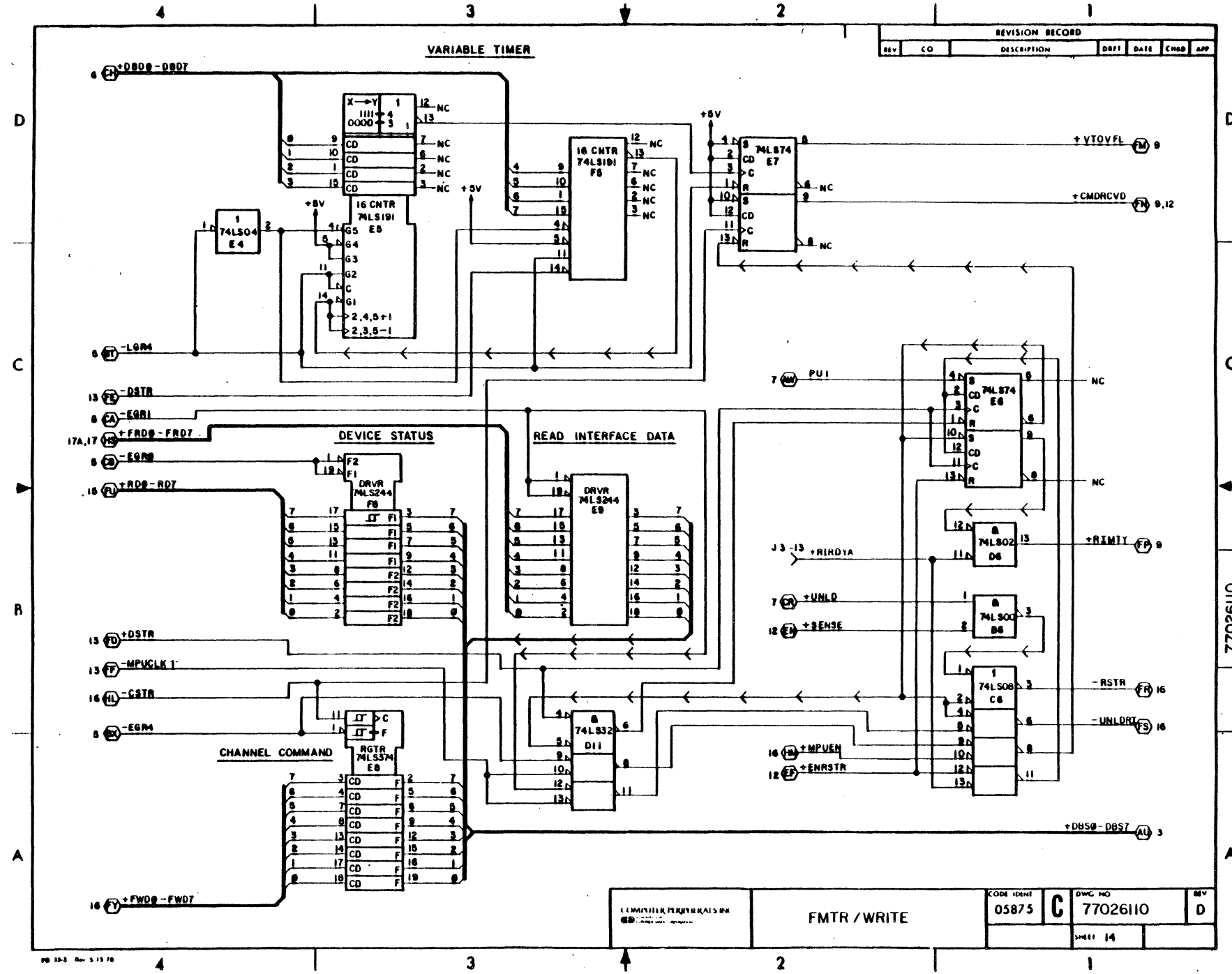
VARIABLE TIMER
REVISION RECORD
REV | CO | DESCRIPTION | DRFT | DATE | CHKD | APP
+DBD0 - DBD7
16 CNTR 74LS191 F8
16 CNTR 74LS191 E8
74LS04 E4
74LS74 E7
+VTOVFL
+CMDRCVD
-LGR4
-DSTR
-EGR1
+FRD0 - FRD7
DEVICE STATUS
READ INTERFACE DATA
DRVR 74LS244 F8
DRVR 74LS244 E8
-EGR0
+RD0 - RD7
74LS74 E6
PU1
NC
74LS02 D6
+RIRDYA
+RIMTY
+UNLD
+SENSE
74LS00 B6
74LS08 C6
-RSTR
-UNLDRT
+DSTR
-MPUCLK 1
-CSTR
-EGR4
CHANNEL COMMAND
RGTR 74LS374 E8
74LS32 D11
+MPUEN
+ENRSTR
+DBS0 - DBS7
+FWD0 - FWD7
FMTR / WRITE
CODE IDENT 05875
C
DWG NO 77026110
REV D
SHEET 14
77026110

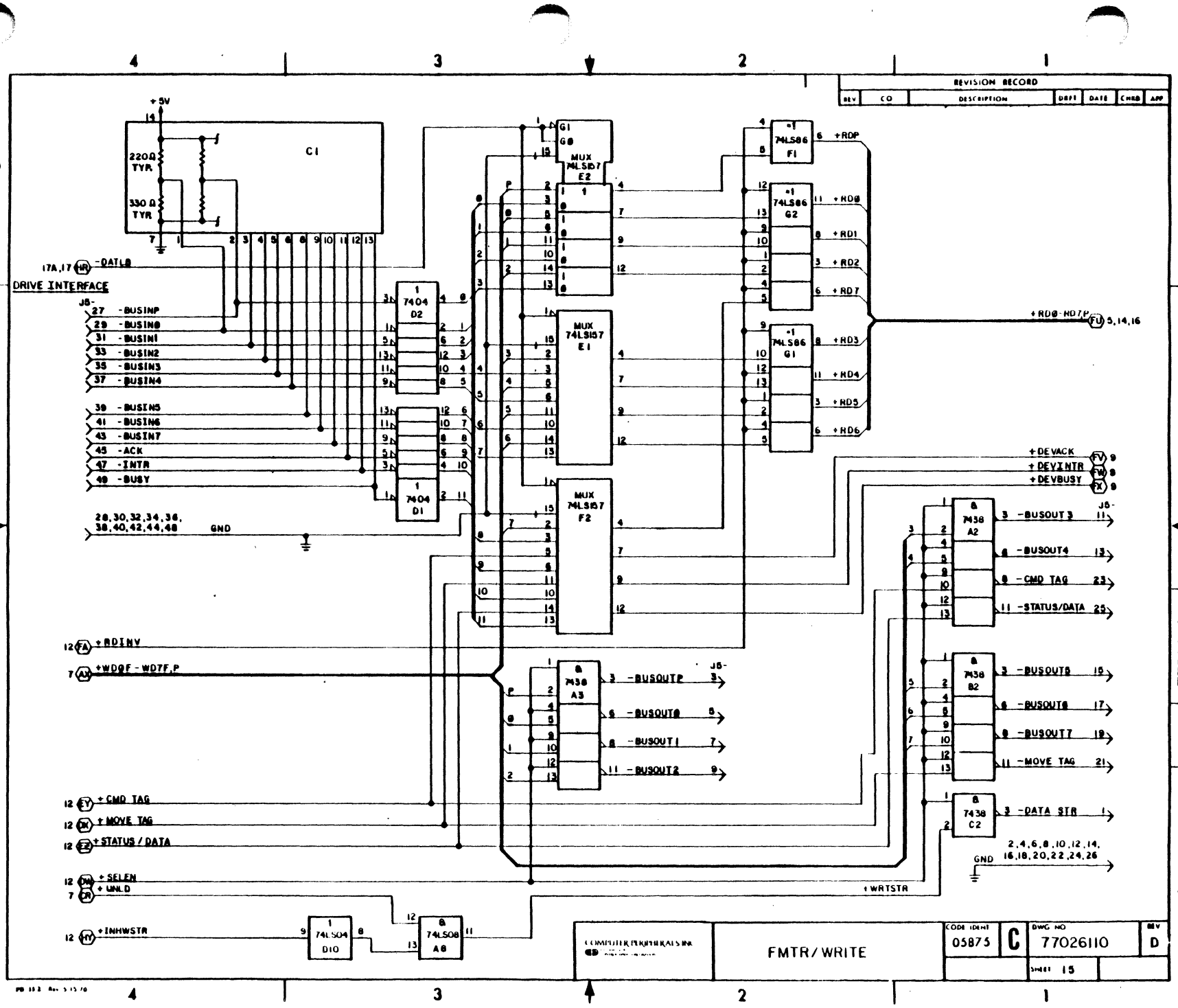
REVISION RECORD
REV
CO
DESCRIPTION
DRFT
DATE
CHKD
APP
+5V
C1
220Ω TYP.
330Ω TYP.
DRIVE INTERFACE
J8-
27 -BUSINP
29 -BUSIN0
31 -BUSIN1
33 -BUSIN2
35 -BUSIN3
37 -BUSIN4
39 -BUSIN5
41 -BUSIN6
43 -BUSIN7
45 -ACK
47 -INTR
49 -BUSY
28,30,32,34,36,38,40,42,44,48 GND
17A,17 -DATL0
7404 D2
7404 D1
MUX 74LS157 E2
MUX 74LS157 E1
MUX 74LS157 F2
74LS86 F1
74LS86 G2
74LS86 G1
+RD0
+RD1
+RD2
+RD7
+RD3
+RD4
+RD5
+RD6
+RD0-RD7P
5,14,16
+DEVACK
+DEVINTR
+DEVBUSY
7438 A2
7438 A3
7438 B2
7438 C2
-BUSOUT3
-BUSOUT4
-CMD TAG
-STATUS/DATA
-BUSOUTP
-BUSOUT0
-BUSOUT1
-BUSOUT2
-BUSOUT5
-BUSOUT6
-BUSOUT7
-MOVE TAG
-DATA STR
2,4,6,8,10,12,14,16,18,20,22,24,26 GND
+RDINV
+WDØF-WD7F,P
+CMD TAG
+MOVE TAG
+STATUS/DATA
+SELEN
+UNLD
+INHWSTR
+WRTSTR
74LS04 D10
74LS08 A6
COMPUTER PERIPHERALS INC.
FMTR/WRITE
CODE IDENT 05875
C
DWG NO 77026110
REV D
SHEET 15

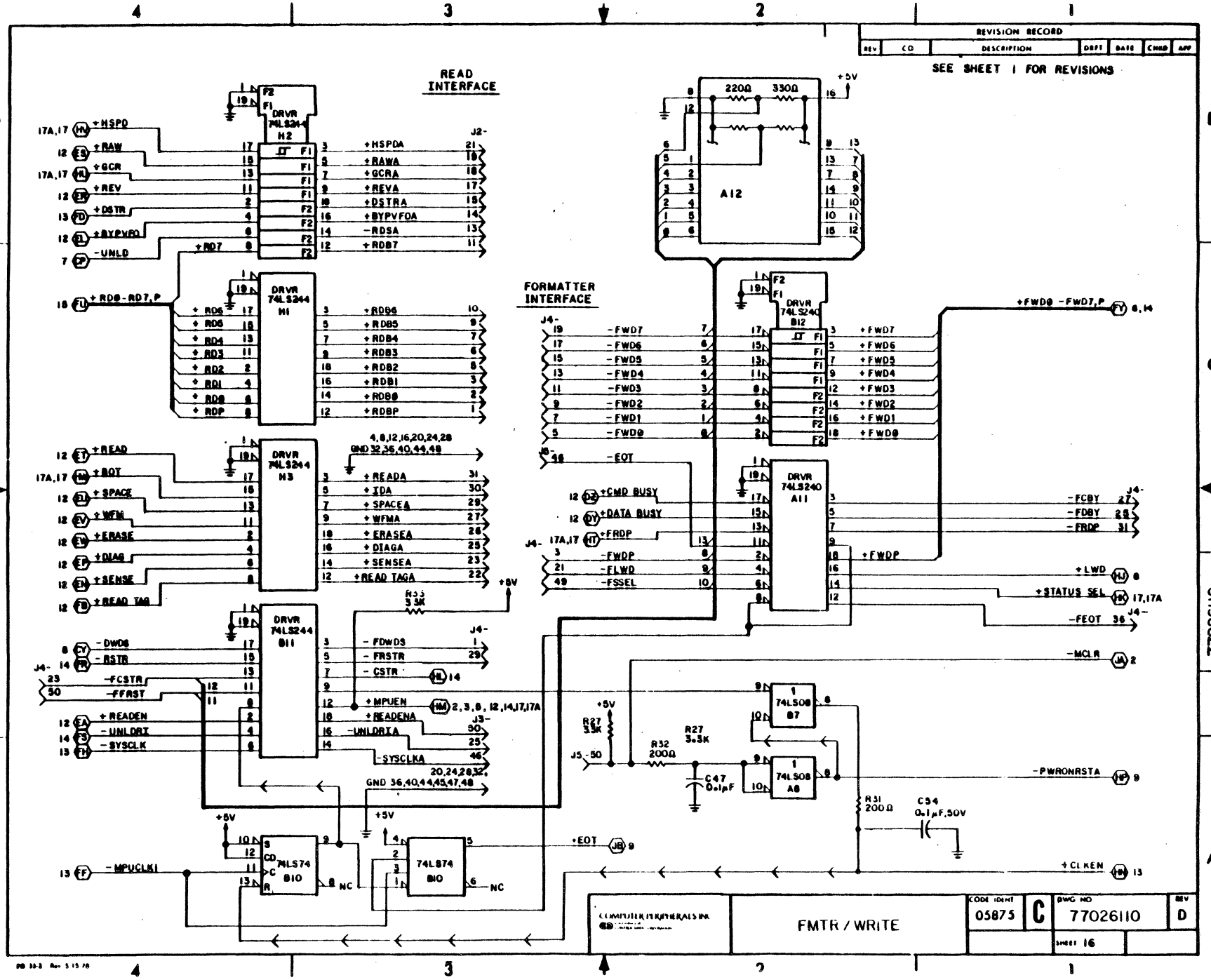
REVISION RECORD
SEE SHEET 1 FOR REVISIONS
READ INTERFACE
FORMATTER INTERFACE
DRVR 74LS244 H2
DRVR 74LS244 H1
DRVR 74LS244 H3
DRVR 74LS244 B11
DRVR 74LS240 B12
DRVR 74LS240 A11
A12
74LS74 B10
74LS08 B7
74LS08 A8
+HSPD
+RAW
+GCR
+REV
+DSTR
+BYPVFO
-UNLD
+RD0-RD7,P
+READ
+EOT
+SPACE
+WFM
+ERASE
+DIAG
+SENSE
+READ TAG
-DWDS
-RSTR
-FCSTR
-FFAST
+READEN
-UNLDRI
-SYSCLK
-MPUCLKI
+FWD0 -FWD7,P
-EOT
+CMD BUSY
+DATA BUSY
+FRDP
-FWDP
-FLWD
-FSSEL
-FCBY
-FDBY
-FRDP
+LWD
+STATUS SEL
-FEOT
-MCLR
-PWRONRSTA
+CLKEN
FMTR / WRITE
CODE IDENT 05875
C
DWG NO 77026110
REV D
SHEET 16

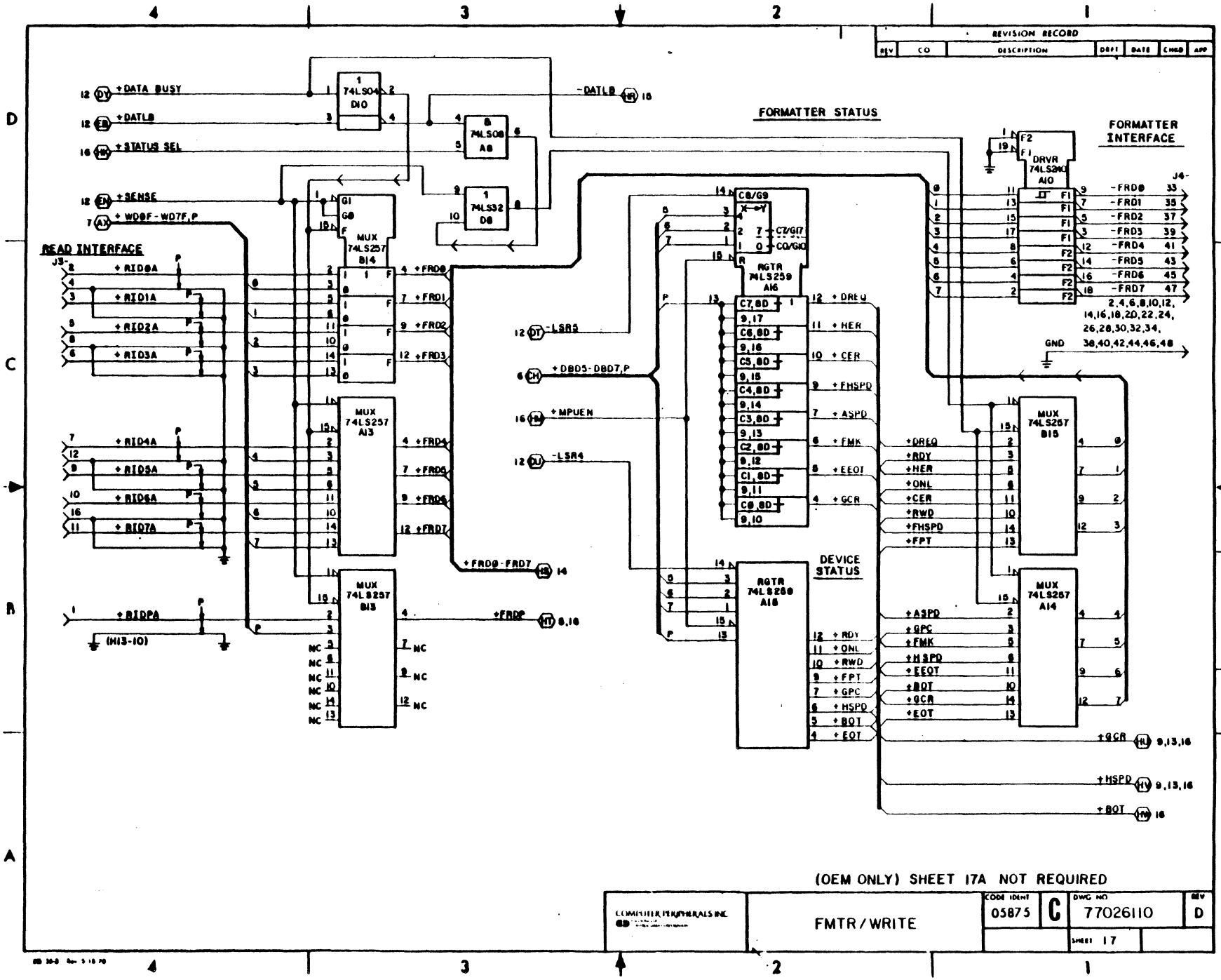
REVISION RECORD
FORMATTER STATUS
FORMATTER INTERFACE
READ INTERFACE
DEVICE STATUS
+DATA BUSY
+DATLB
+STATUS SEL
+SENSE
+WD0F-WD7F,P
+RID0A
+RID1A
+RID2A
+RID3A
+RID4A
+RID5A
+RID6A
+RID7A
+RIDPA
(NI3-10)
74LS04 D10
74LS08 A8
74LS32 D8
MUX 74LS257 B14
MUX 74LS257 A13
MUX 74LS257 B13
+FRD0
+FRD1
+FRD2
+FRD3
+FRD4
+FRD5
+FRD6
+FRD7
+FRDP
+FRD0-FRD7
-DATLB
-LSR5
+DBD5-DBD7,P
+MPUEN
-LSR4
C8/G9
C7/G7
C0/G10
RGTR 74LS259 A16
RGTR 74LS280 A15
+DREQ
+RDY
+HER
+ONL
+CER
+RWD
+FHSPD
+FPT
+ASPD
+GPC
+FMK
+HSPD
+EEOT
+BOT
+EOT
+GCR
DRVR 74LS240 A10
-FRD0
-FRD1
-FRD2
-FRD3
-FRD4
-FRD5
-FRD6
-FRD7
2,4,6,8,10,12, 14,16,18,20,22,24, 26,28,30,32,34, 36,40,42,44,46,48
GND
MUX 74LS257 B15
MUX 74LS257 A14
(OEM ONLY) SHEET 17A NOT REQUIRED
COMPUTER PERIPHERALS INC.
FMTR/WRITE
CODE IDENT 05875
C
DWG NO 77026110
REV D
SHEET 17

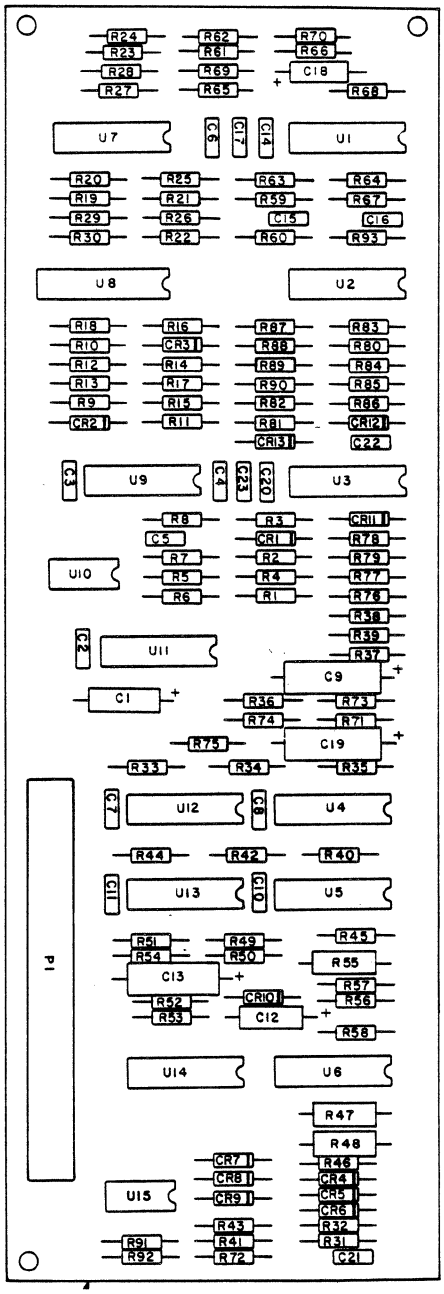


POWER SUPPLY CONTROL PWA

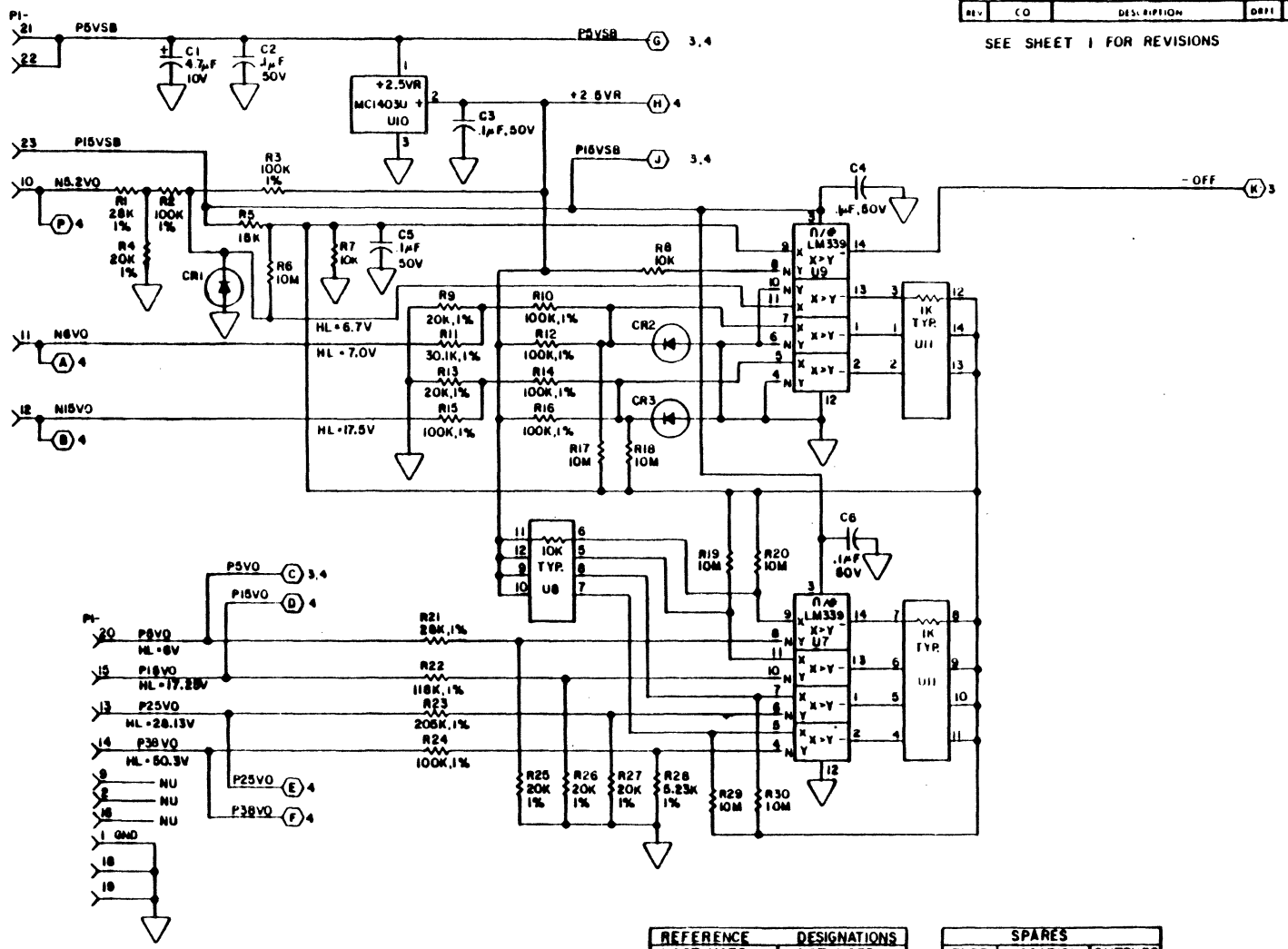


SEE SHEET 1 FOR REVISIONS

| REVISION RECORD | | | | | | |
|---|---|---|---|---|---|---|
| REV | CO | DESCRIPTION | DRFT | DATE | CHKD | APP |

| REFERENCE DESIGNATIONS | |
|---|---|
| LAST USED | NOT USED |
| U15<br>R93<br>C23<br>CR13<br>S<br>SW1 | |

| SPARES | | |
|---|---|---|
| TYPE | LOCATION | OUTPUTS |
| | | |

NOTES:

1. ALL RESISTORS ARE 1/4W, 5% UNLESS OTHERWISE SPECIFIED.
2. ALL DIODES ARE IN4148 UNLESS OTHERWISE SPECIFIED.

| | | | | |
|---|---|---|---|---|
| COMPUTER PERIPHERALS INC. | PWA<br>POWER SUPPLY CONTROL | CODE IDENT 05875 | C | DWG NO 77041280 REV E |
| | | | | SHEET 2 |

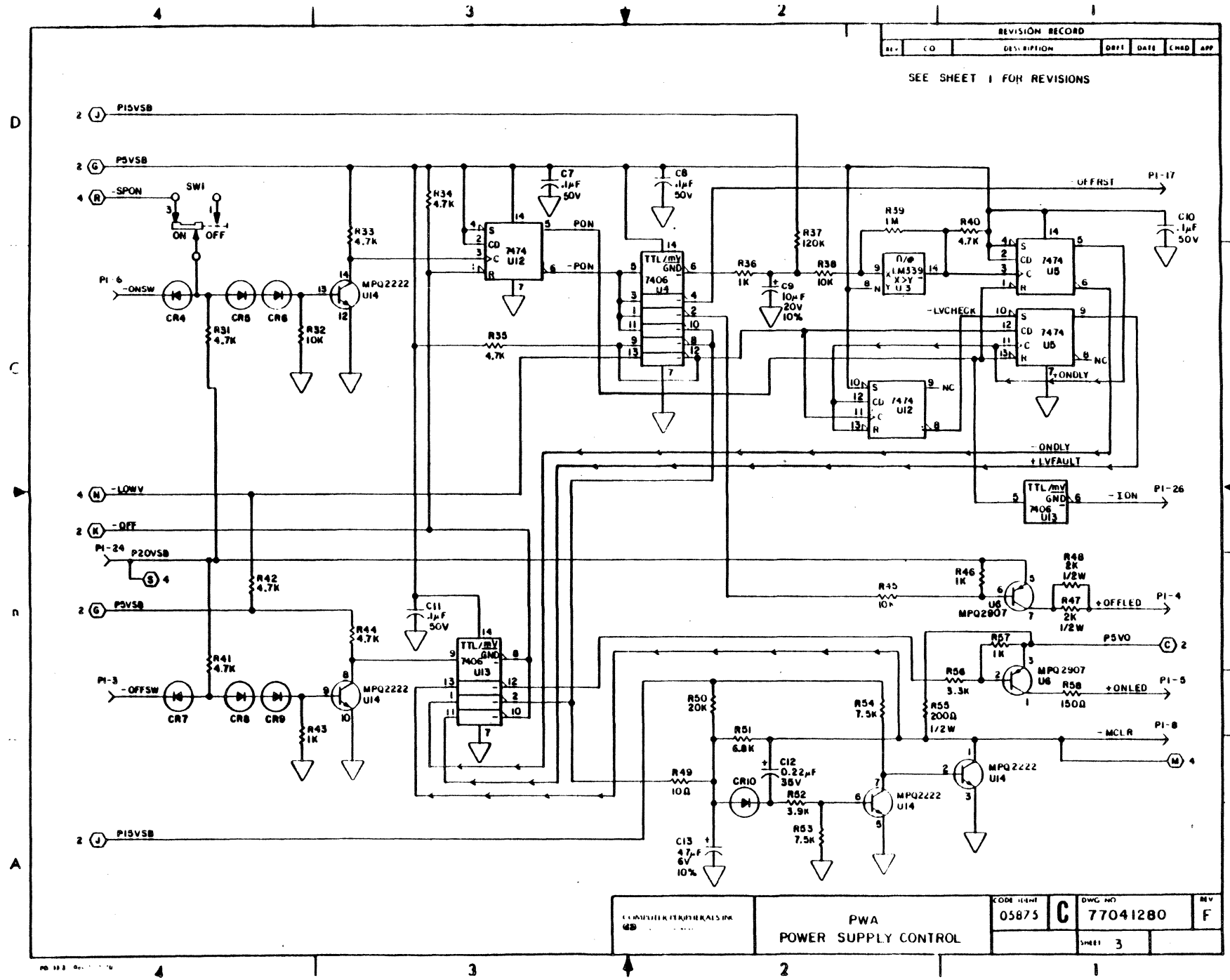
REVISION RECORD
SEE SHEET 1 FOR REVISIONS
P15VSB
P5VSB
-SPON
SW1
ON
OFF
PI-6
-ONSW
CR4
CR5
CR6
MPQ2222
U14
R31 4.7K
R32 10K
R33 4.7K
R34 4.7K
R35 4.7K
R36 1K
R37 120K
R38 10K
R39 1M
R40 4.7K
R41 4.7K
R42 4.7K
R43 1K
R44 4.7K
R45 10K
R46 1K
R47 2K 1/2W
R48 2K 1/2W
R49 10Ω
R50 20K
R51 6.8K
R52 3.9K
R53 7.5K
R54 7.5K
R55 200Ω 1/2W
R56 3.3K
R57 1K
R58 150Ω
C7 .1μF 50V
C8 .1μF 50V
C9 10μF 20V 10%
C10 .1μF 50V
C11 .1μF 50V
C12 0.22μF 35V
C13 47μF 6V 10%
7474 U12
7406 U4
7406 U13
LM339 U3
7474 U5
MPQ2907 U6
CR10
-OFFRST
PI-17
-PON
PON
-LVCHECK
-ONDLY
+LVFAULT
NC
-ION
PI-26
P20VSB
PI-24
-LOWV
-OFF
PI-3
-OFFSW
CR7
CR8
CR9
+OFFLED
PI-4
P5VO
+ONLED
PI-5
-MCLR
PI-8
COMPUTER PERIPHERALS INC.
PWA
POWER SUPPLY CONTROL
05875
C
77041280
F
SHEET 3

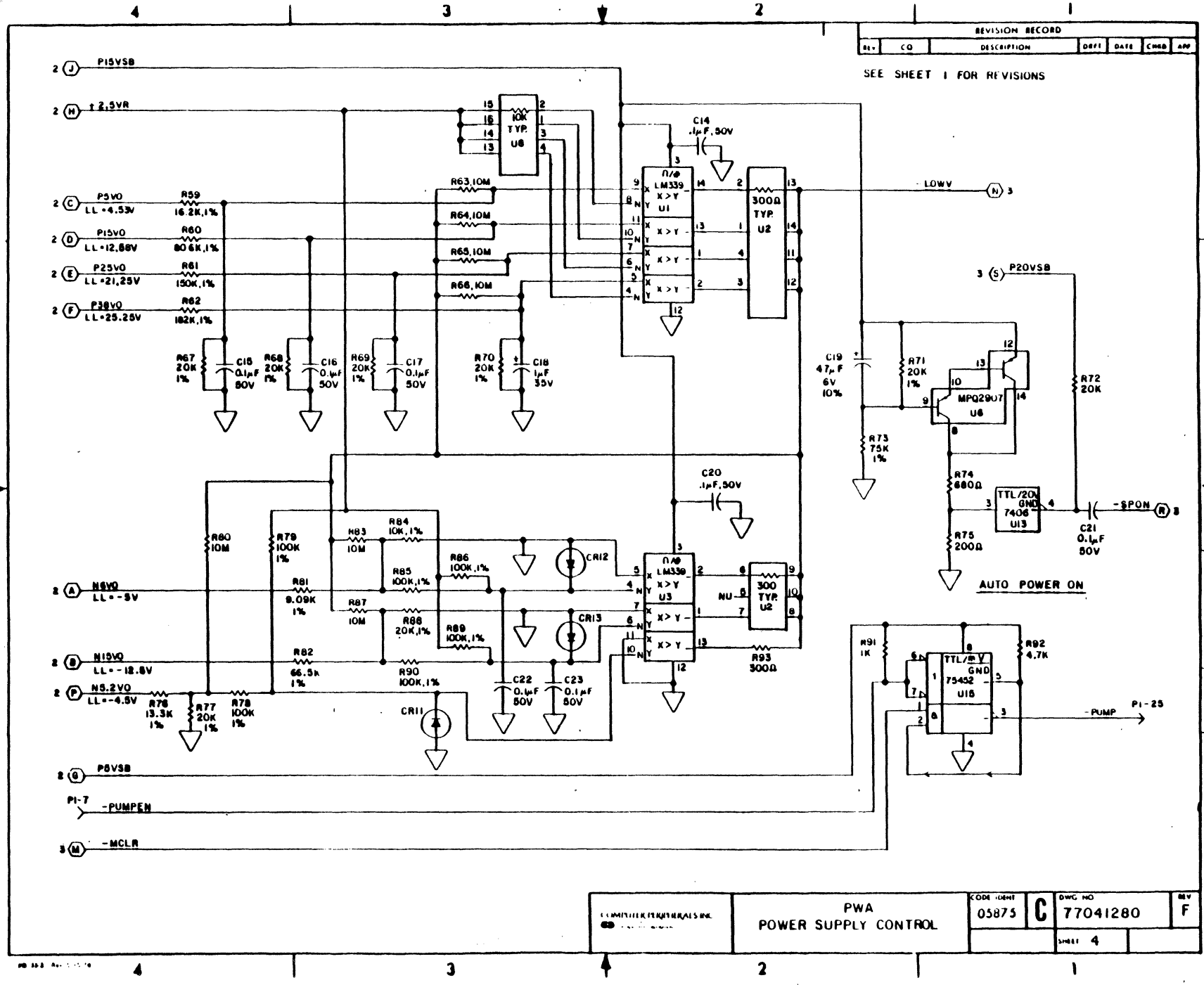
REVISION RECORD
SEE SHEET 1 FOR REVISIONS
P15VSB
+2.5VR
P5VO
LL=4.53V
P15VO
LL=12.88V
P25VO
LL=21.25V
P38VO
LL=25.25V
N6VO
LL=-9V
N15VO
LL=-12.8V
N5.2VO
LL=-4.5V
P8VSB
P1-7
-PUMPEN
-MCLR
-LOWV
P20VSB
-SPON
AUTO POWER ON
-PUMP
P1-25
PWA
POWER SUPPLY CONTROL
05875
C
77041280
F
SHEET 4

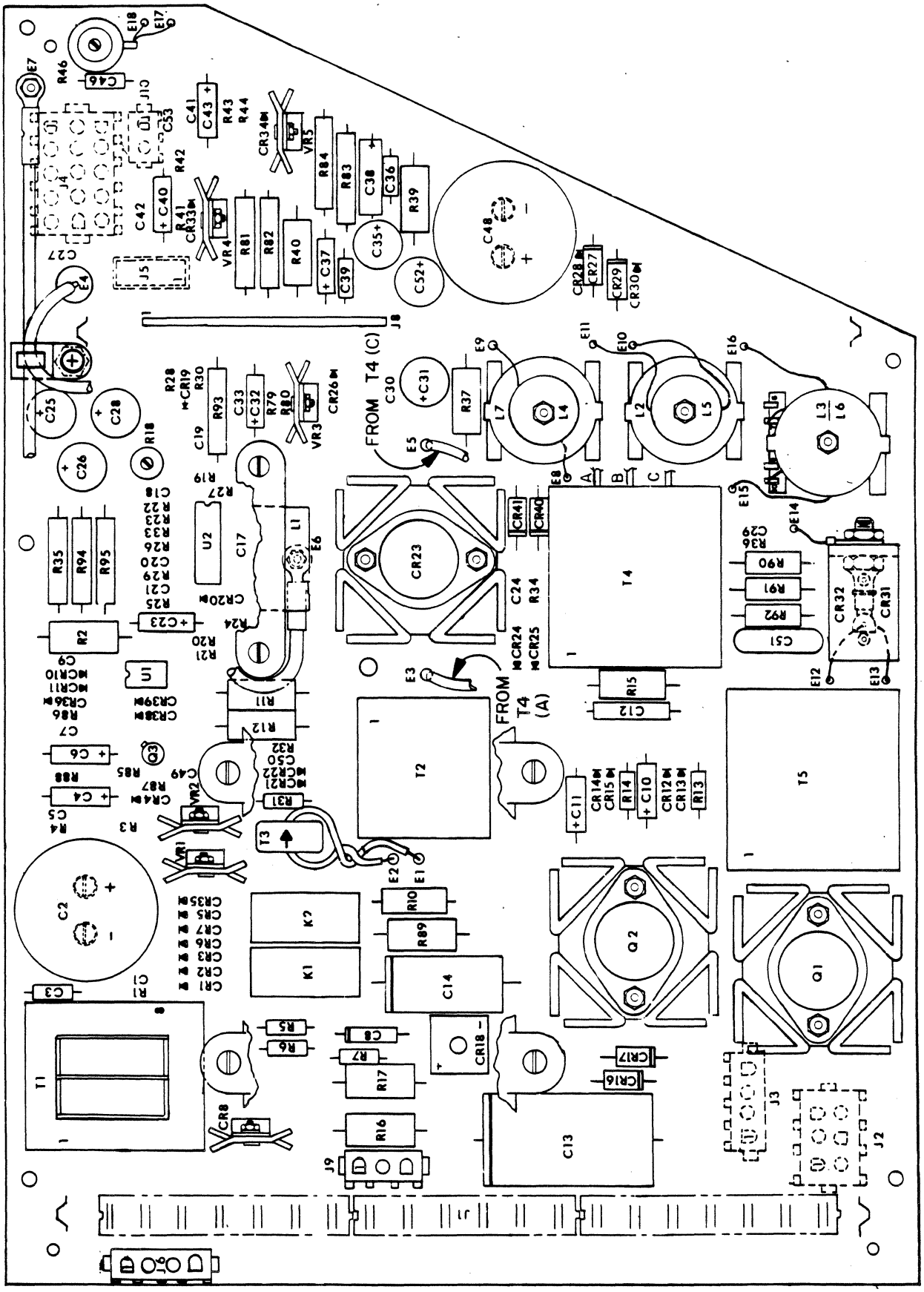


POWER SUPPLY PWA

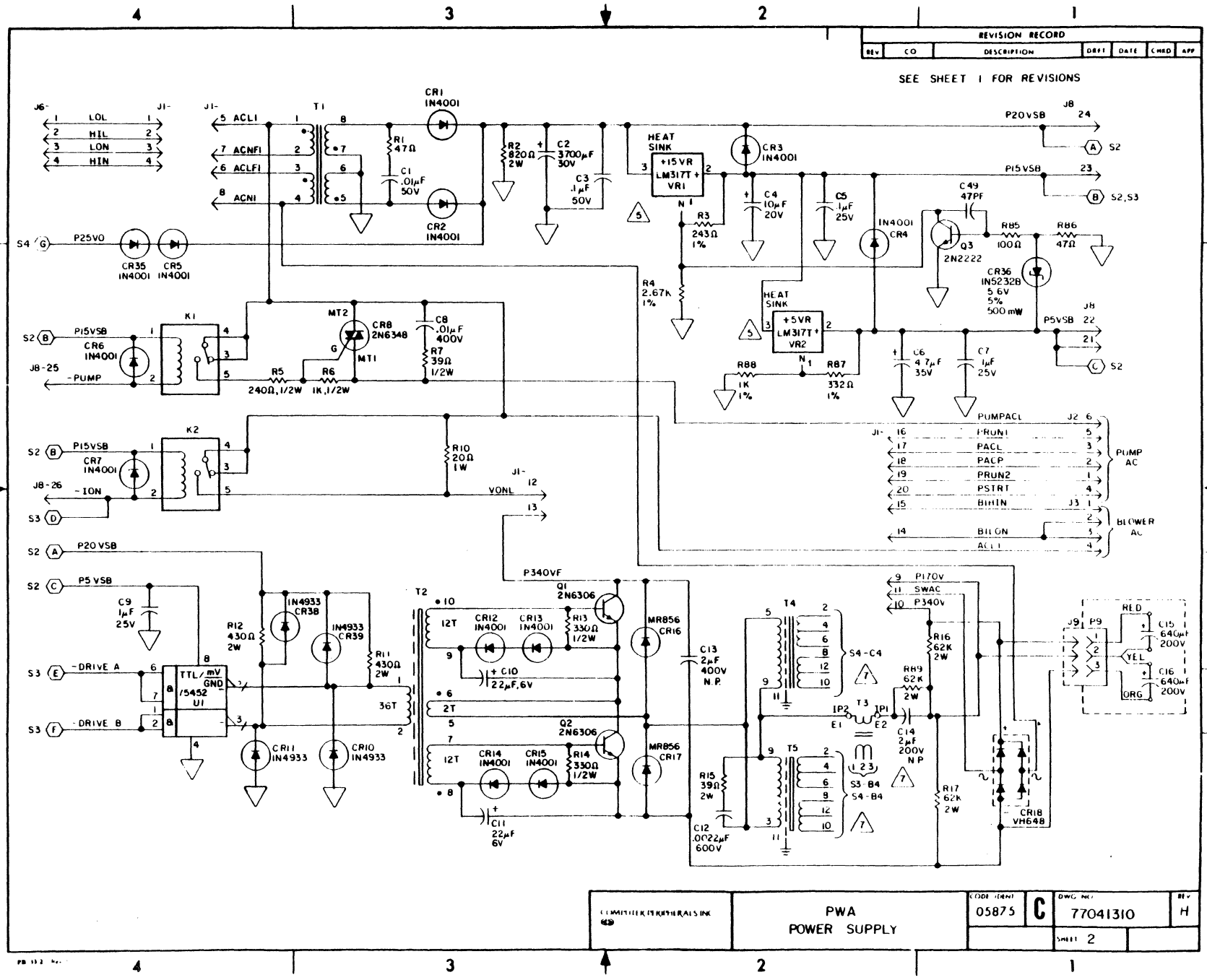
REVISION RECORD
REV | CO | DESCRIPTION | DRFT | DATE | CHKD | APP
SEE SHEET 1 FOR REVISIONS
J6- 1 LOL 1 J1-
2 MIL 2
3 LON 3
4 HIN 4
J1- 5 ACLI 7 ACNFI 6 ACLFI 8 ACNI
T1
CR1 IN4001
CR2 IN4001
R1 47Ω
C1 .01µF 50V
R2 820Ω 2W
C2 3700µF 30V
C3 .1µF 50V
HEAT SINK
+15VR LM317T + VR1
R3 243Ω 1%
CR3 IN4001
C4 10µF 20V
C5 1µF 25V
CR4 IN4001
C49 47PF
Q3 2N2222
R85 100Ω
R86 47Ω
CR36 IN5232B 5.6V 5% 500mW
R4 2.67K 1%
HEAT SINK
+5VR LM317T + VR2
R88 1K 1%
R87 332Ω 1%
C6 47µF 35V
C7 1µF 25V
P20VSB J8 24
P15VSB 23
P5VSB 22
21
S4 G P25VO
CR35 IN4001
CR5 IN4001
S2 B P15VSB
CR6 IN4001
J8-25 -PUMP
K1
MT2 CR8 2N6348 MT1
C8 .01µF 400V
R7 39Ω 1/2W
R5 240Ω,1/2W
R6 1K,1/2W
S2 B P15VSB
CR7 IN4001
J8-26 -ION
S3 D
K2
R10 20Ω 1W
J1- 12 VONL
13
PUMPACL J2 6
J1- 16 PRUN1 5
17 PACL 3
18 PACP 2
19 PRUN2 1
20 PSTRT 4
15 BIHIN J3 1
2
14 BILON 3
ACLI 4
PUMP AC
BLOWER AC
S2 A P20VSB
S2 C P5VSB
C9 1µF 25V
S3 E -DRIVE A
S3 F -DRIVE B
TTL/mV GND /5452 U1
R12 430Ω 2W
IN4933 CR38
IN4933 CR39
R11 430Ω 2W
36T
CR11 IN4933
CR10 IN4933
T2
P340VF
Q1 2N6306
Q2 2N6306
CR12 IN4001
CR13 IN4001
R13 330Ω 1/2W
+ C10 22µF,6V
CR14 IN4001
CR15 IN4001
R14 330Ω 1/2W
+ C11 22µF 6V
MR856 CR16
MR856 CR17
C13 2µF 400V N.P.
C12 .0022µF 600V
T4
T5
S4-C4
S3-B4
S4-B4
T3
IP2 E1 IP1 E2
R15 39Ω 2W
R16 62K 2W
R17 62K 2W
R18 62K 2W
C14 2µF 200V N.P.
9 P170V
11 SWAC
10 P340V
CR18 VH648
J9 P9
RED C15 640µF 200V
YEL
ORG C16 640µF 200V
COMPUTER PERIPHERALS INC.
PWA
POWER SUPPLY
CODE IDENT 05875
C
DWG NO 77041310
REV H
SHEET 2

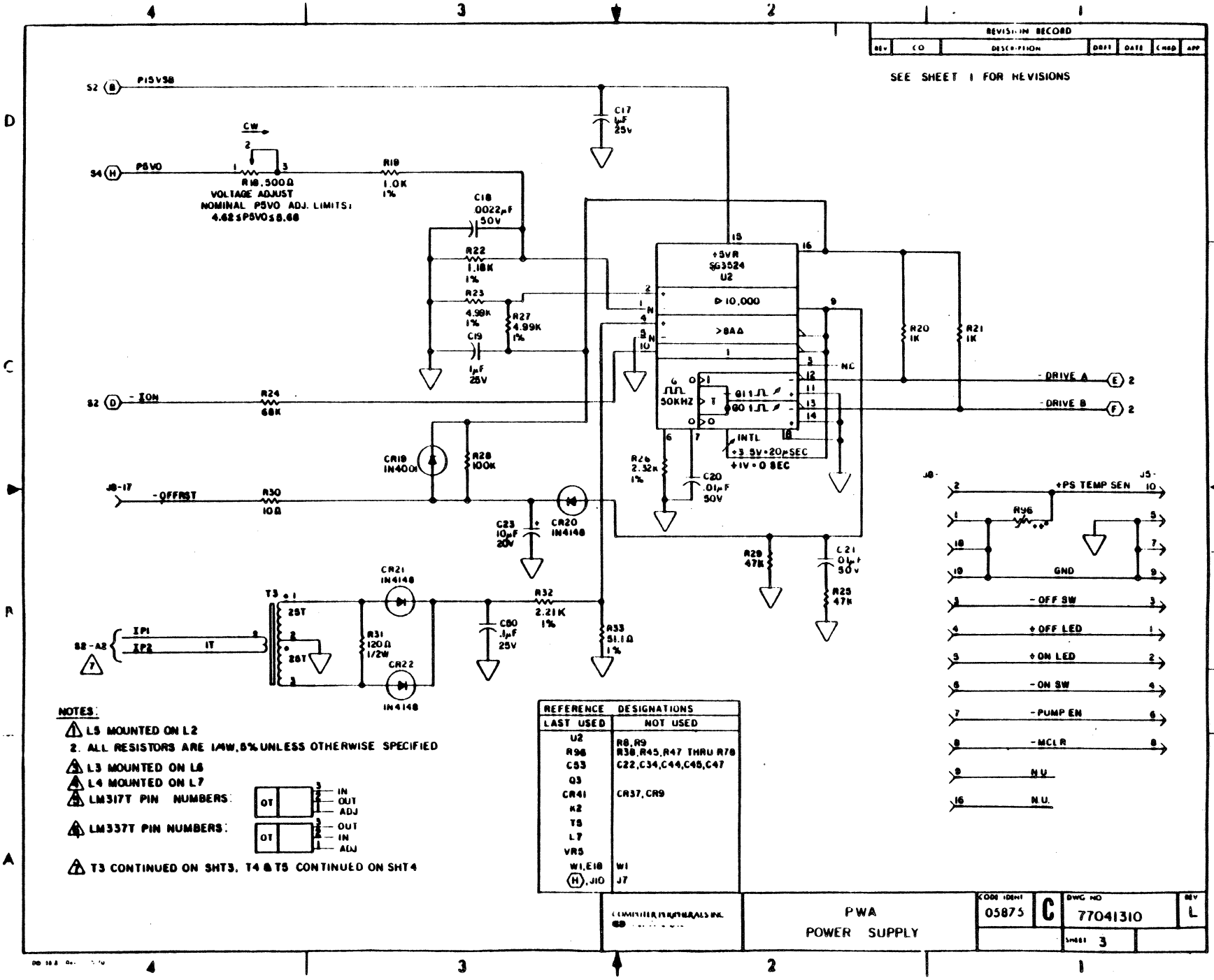


NOTES:

1. L5 MOUNTED ON L2
2. ALL RESISTORS ARE 1/4W, 5% UNLESS OTHERWISE SPECIFIED
3. L3 MOUNTED ON L6
4. L4 MOUNTED ON L7
5. LM317T PIN NUMBERS: OT — IN, OUT, ADJ
6. LM337T PIN NUMBERS: OT — OUT, IN, ADJ
7. T3 CONTINUED ON SHT3, T4 & T5 CONTINUED ON SHT4

| REFERENCE DESIGNATIONS | |
|---|---|
| LAST USED | NOT USED |
| U2 | R8, R9 |
| R96 | R38, R45, R47 THRU R78 |
| C53 | C22, C34, C44, C45, C47 |
| Q3 | |
| CR41 | CR37, CR9 |
| K2 | |
| T5 | |
| L7 | |
| VR5 | |
| W1, E18 | W1 |
| (H), J10 | J7 |

COMPUTER PERIPHERALS INC

PWA
POWER SUPPLY

CODE IDENT 05875 | C | DWG NO 77041310 | REV L

SHEET 3

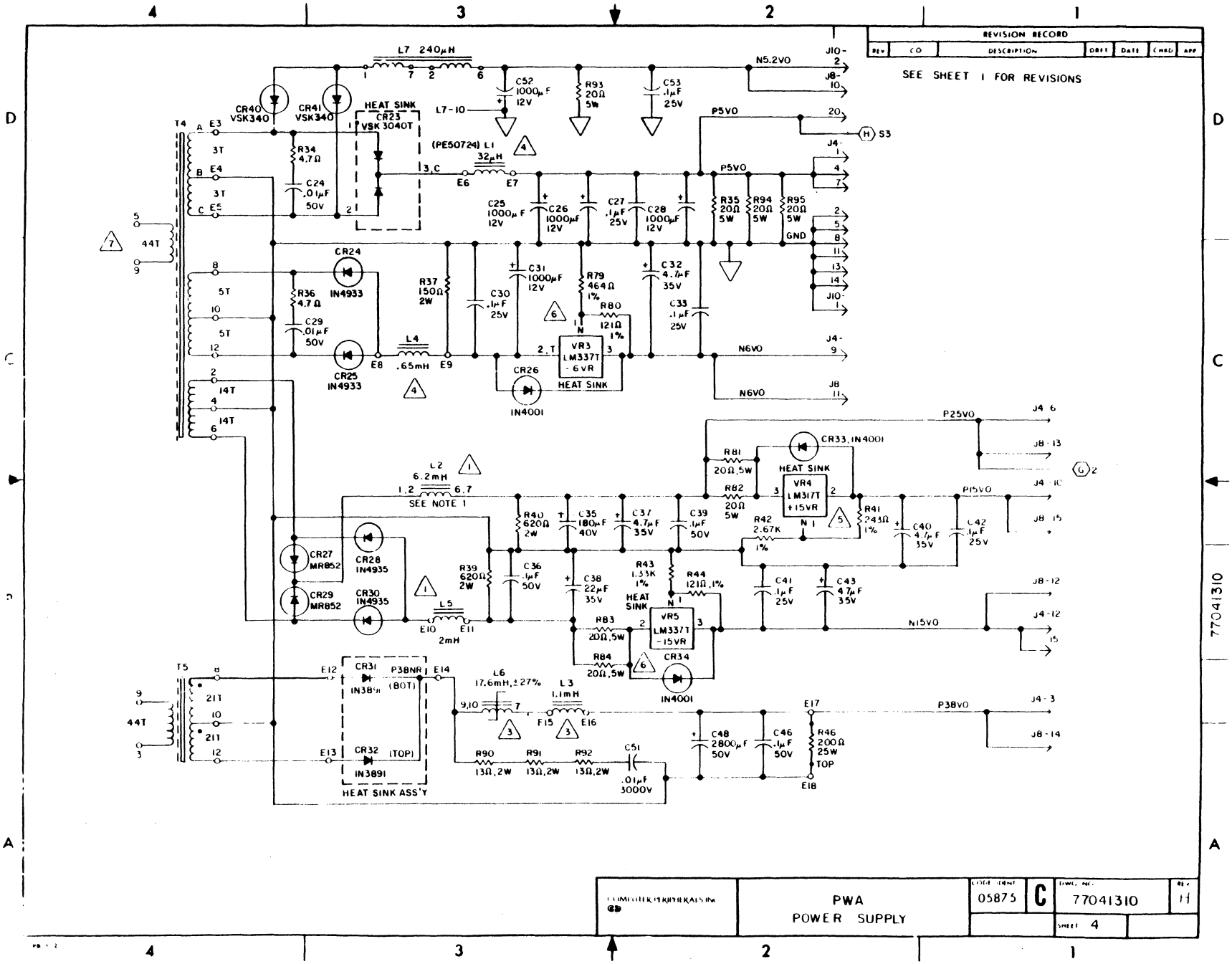
REVISION RECORD
REV
CO
DESCRIPTION
DRFT
DATE
CHKD
APP
SEE SHEET 1 FOR REVISIONS
L7 240μH
C52 1000μF 12V
R93 20Ω 5W
C53 .1μF 25V
N5.2VO
J10-2
J8-10
CR40 VSK340
CR41 VSK340
HEAT SINK
CR23 VSK3040T
L7-10
P5VO
20
S3
T4
E3
3T
E4
3T
E5
R34 4.7Ω
C24 .01μF 50V
(PE50724) L1 32μH
E6
E7
C25 1000μF 12V
C26 1000μF 12V
C27 .1μF 25V
C28 1000μF 12V
R35 20Ω 5W
R94 20Ω 5W
R95 20Ω 5W
GND
J4-1
44T
CR24 IN4933
R36 4.7Ω
C29 .01μF 50V
R37 150Ω 2W
C30 .1μF 25V
C31 1000μF 12V
R79 464Ω 1%
R80 121Ω 1%
C32 4.7μF 35V
C33 .1μF 25V
J10-1
5T
5T
CR25 IN4933
E8
L4 .65mH
E9
VR3 LM337T -6VR
HEAT SINK
CR26 IN4001
N6VO
J4-9
J8-11
14T
14T
P25VO
J4-6
J8-13
CR33, IN4001
R81 20Ω,5W
HEAT SINK
VR4 LM317T +15VR
R82 20Ω 5W
L2 6.2mH
SEE NOTE 1
R40 620Ω 2W
C35 180μF 40V
C37 4.7μF 35V
C39 .1μF 50V
R42 2.67K 1%
R41 243Ω 1%
C40 4.7μF 35V
C42 .1μF 25V
P15VO
J4-10
J8-15
CR27 MR852
CR28 IN4935
CR29 MR852
CR30 IN4935
R39 620Ω 2W
C36 .1μF 50V
C38 22μF 35V
R43 1.33K 1%
R44 121Ω,1%
C41 .1μF 25V
C43 4.7μF 35V
J8-12
L5 2mH
E10
E11
HEAT SINK
VR5 LM337T -15VR
R83 20Ω,5W
R84 20Ω,5W
CR34 IN4001
N15VO
J4-12
T5
E12
CR31 IN3891
P38NR (BOT)
E14
L6 17.6mH,±27%
L3 1.1mH
F15
E16
E17
P38VO
J4-3
J8-14
44T
21T
21T
E13
CR32 IN3891
(TOP)
HEAT SINK ASS'Y
R90 13Ω,2W
R91 13Ω,2W
R92 13Ω,2W
C51 .01μF 3000V
C48 2800μF 50V
C46 .1μF 50V
R46 200Ω 25W
TOP
E18
77041310
COMPUTER PERIPHERALS INC
PWA
POWER SUPPLY
CODE IDENT 05875
C
DWG. NO. 77041310
REV H
SHEET 4

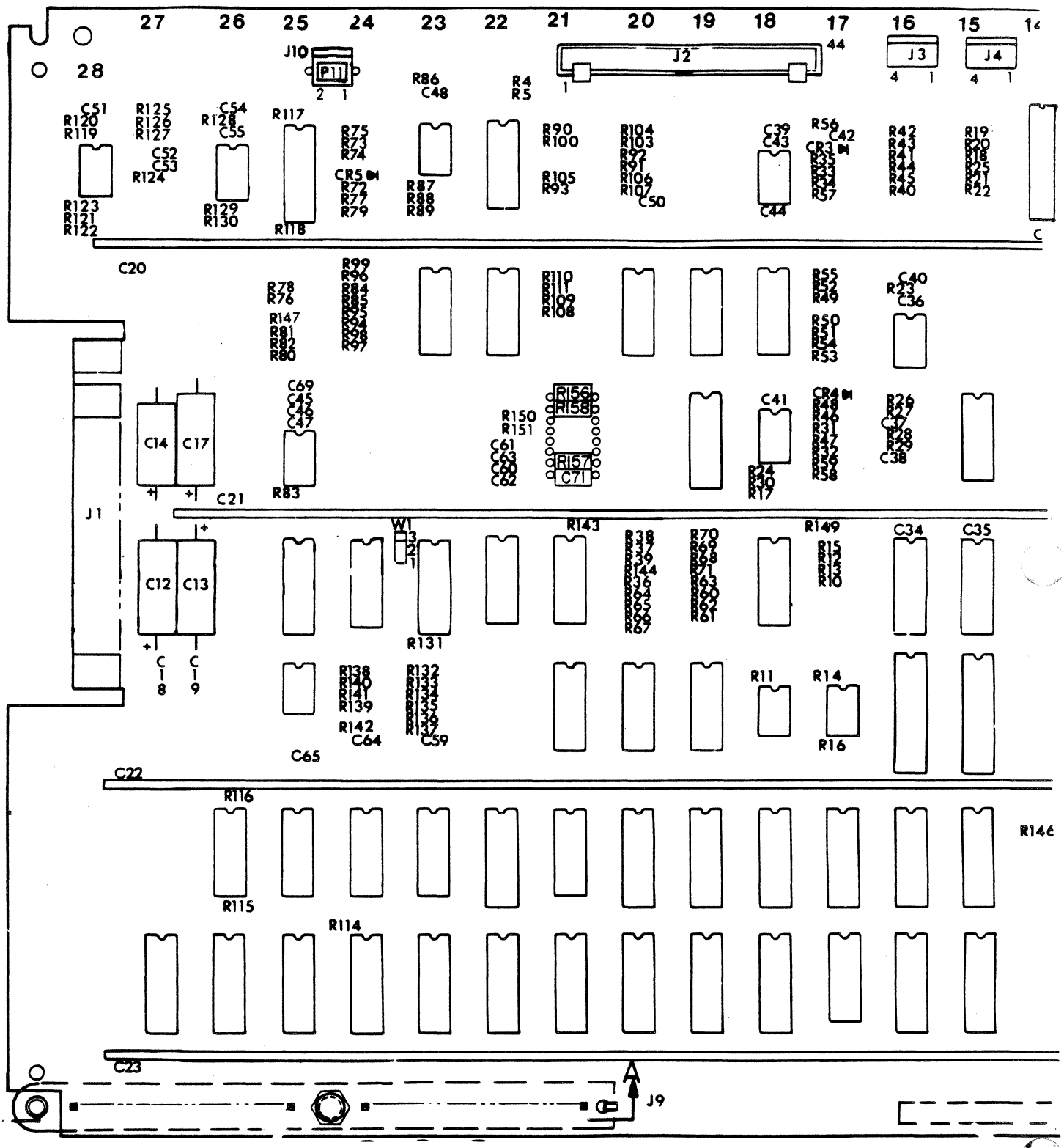


SERVO/CONTROL PWA

SHEET 1A

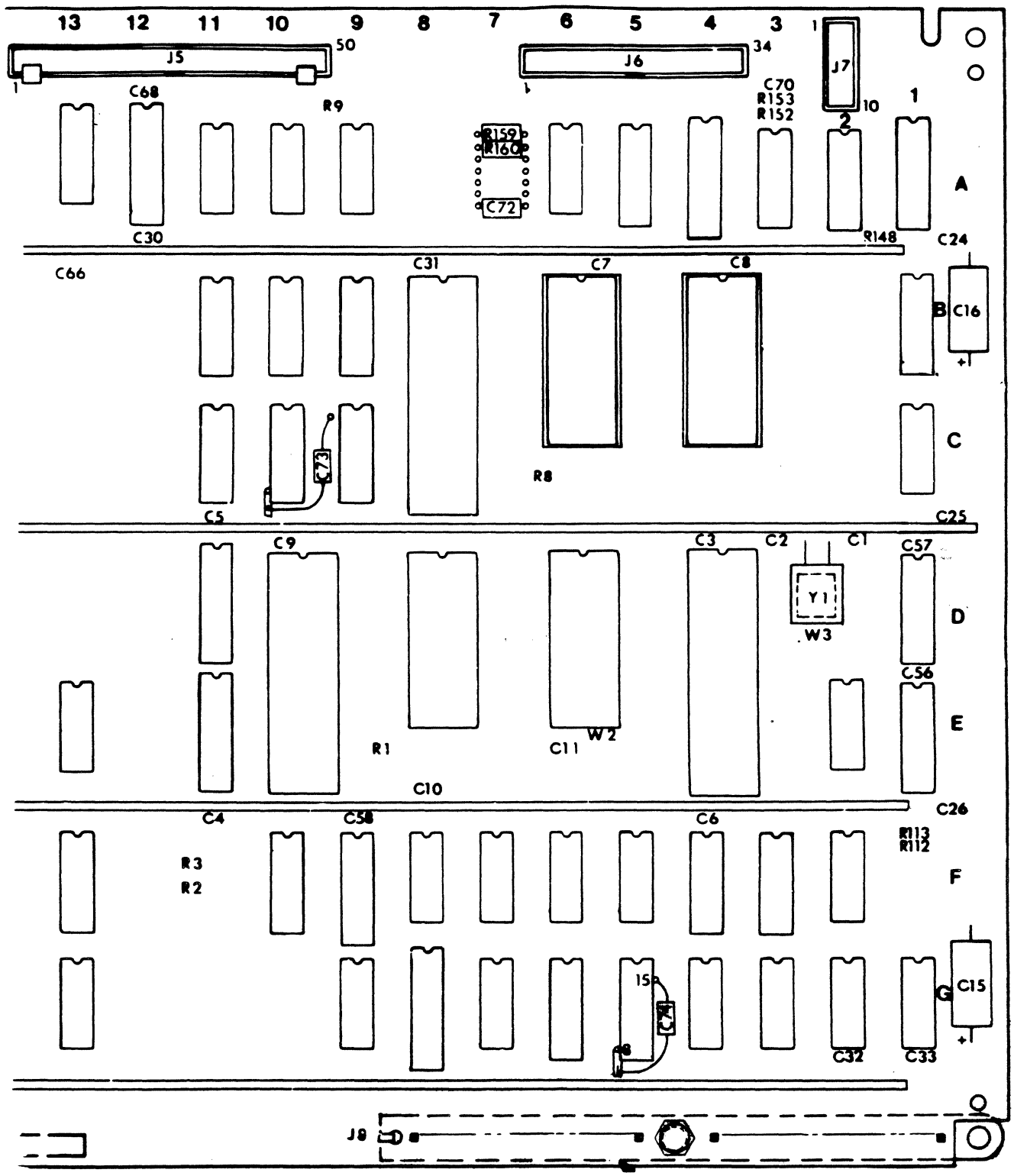


SERVO/CONTROL PWA

SHEET 1B

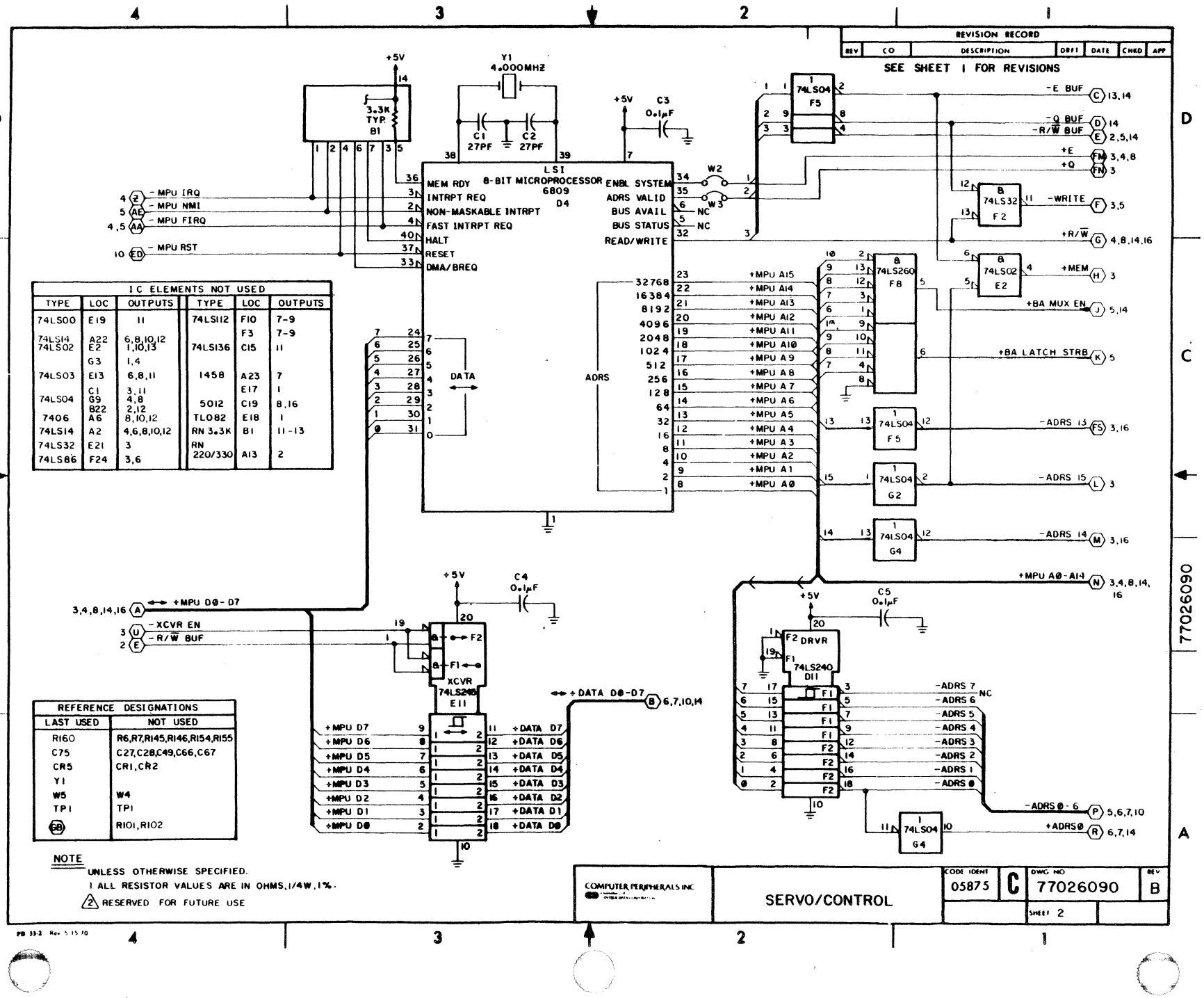
REVISION RECORD
REV | CO | DESCRIPTION | DRFT | DATE | CHKD | APP
SEE SHEET 1 FOR REVISIONS
LSI 8-BIT MICROPROCESSOR 6809 D4
MEM RDY
INTRPT REQ
NON-MASKABLE INTRPT
FAST INTRPT REQ
HALT
RESET
DMA/BREQ
ENBL SYSTEM
ADRS VALID
BUS AVAIL
BUS STATUS
READ/WRITE
Y1 4.000MHZ
C1 27PF
C2 27PF
C3 0.1µF
C4 0.1µF
C5 0.1µF
3.3K TYP. B1
W2
W3
- MPU IRQ
- MPU NMI
- MPU FIRQ
- MPU RST
DATA
ADRS
+MPU A15
+MPU A14
+MPU A13
+MPU A12
+MPU A11
+MPU A10
+MPU A9
+MPU A8
+MPU A7
+MPU A6
+MPU A5
+MPU A4
+MPU A3
+MPU A2
+MPU A1
+MPU A0
- E BUF
- Q BUF
- R/W BUF
+E
+Q
- WRITE
+R/W
+MEM
+BA MUX EN
+BA LATCH STRB
- ADRS 13
- ADRS 15
- ADRS 14
+MPU A0-A14
+MPU D0-D7
- XCVR EN
- R/W BUF
XCVR 74LS245 E11
F2 DRVR 74LS240 D11
+DATA D0-D7
- ADRS 7
- ADRS 6
- ADRS 5
- ADRS 4
- ADRS 3
- ADRS 2
- ADRS 1
- ADRS 0
- ADRS 0-6
+ADRS 0
IC ELEMENTS NOT USED
TYPE | LOC | OUTPUTS | TYPE | LOC | OUTPUTS
74LS00 E19 11 | 74LS112 F10 7-9
F3 7-9
74LS14 A22 6,8,10,12
74LS02 E2 1,10,13 | 74LS136 C15 11
G3 1,4
74LS03 E13 6,8,11 | 1458 A23 7
E17 1
74LS04 C1 3,11
G9 4,8
B22 2,12 | 5012 C19 8,16
7406 A6 8,10,12 | TL082 E18 1
74LS14 A2 4,6,8,10,12 | RN 3.3K B1 11-13
74LS32 E21 3 | RN 220/330 A13 2
74LS86 F24 3,6
REFERENCE DESIGNATIONS
LAST USED | NOT USED
R160 | R6,R7,R145,R146,R154,R155
C75 | C27,C28,C49,C66,C67
CR5 | CR1,CR2
Y1
W5 | W4
TP1 | TP1
SB | R101,R102
NOTE
UNLESS OTHERWISE SPECIFIED.
1 ALL RESISTOR VALUES ARE IN OHMS, 1/4W, 1%.
2 RESERVED FOR FUTURE USE
COMPUTER PERIPHERALS INC.
SERVO/CONTROL
CODE IDENT 05875
C
DWG NO 77026090
REV B
SHEET 2
77026090

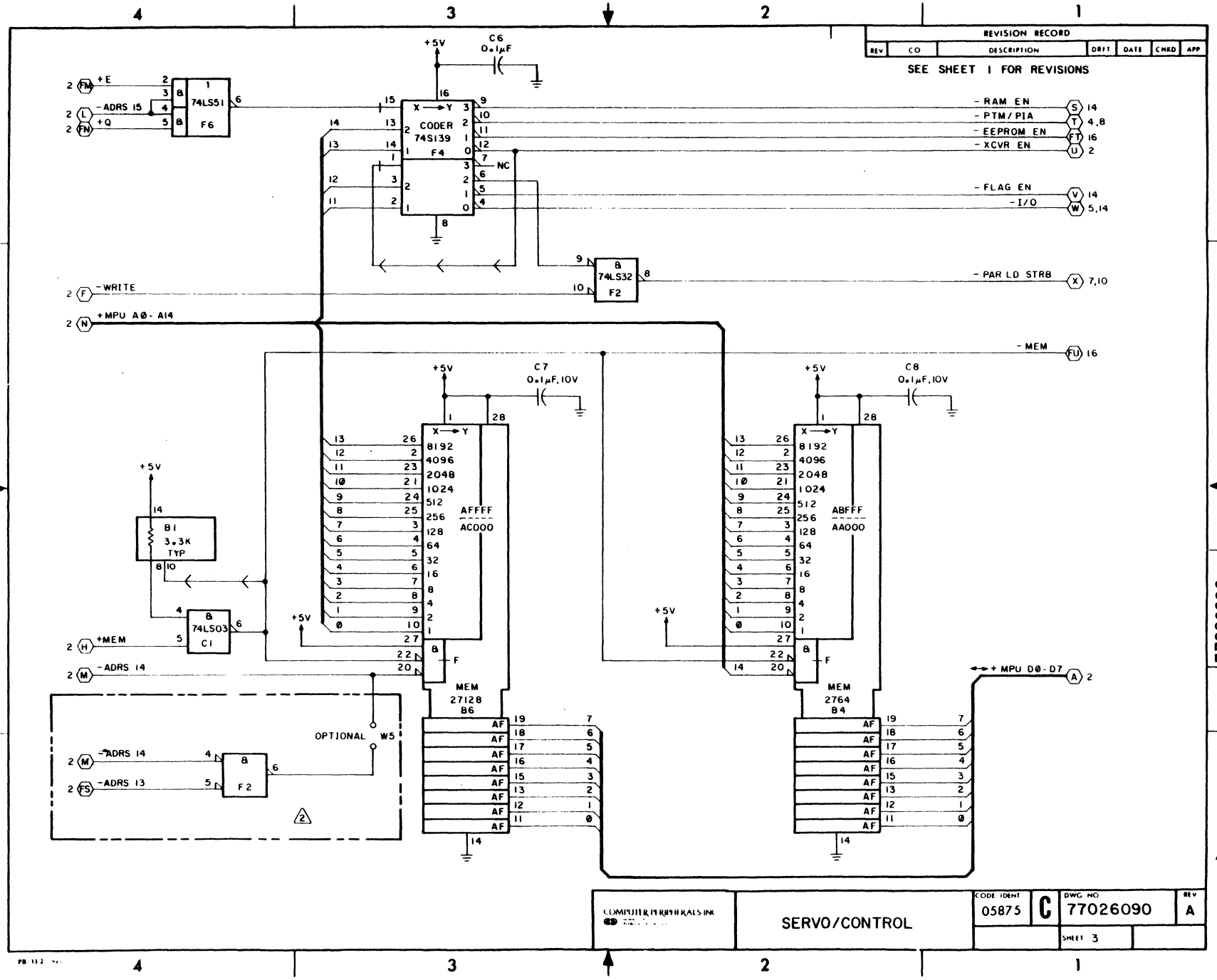
REVISION RECORD
REV | CO | DESCRIPTION | DRFT | DATE | CHKD | APP
SEE SHEET 1 FOR REVISIONS
+E
-ADRS 15
+Q
74LS51 F6
+5V
C6 0.1µF
CODER 74S139 F4
NC
- RAM EN
- PTM/PIA
- EEPROM EN
- XCVR EN
- FLAG EN
- I/O
74LS32 F2
-WRITE
- PAR LD STRB
+MPU A0-A14
- MEM
C7 0.1µF, 10V
C8 0.1µF, 10V
8192
4096
2048
1024
512
256
128
64
32
16
8
4
2
1
AFFFF
AC000
ABFFF
AA000
B1 3.3K TYP
74LS03 C1
+MEM
-ADRS 14
-ADRS 13
OPTIONAL W5
MEM 27128 B6
MEM 2764 B4
+MPU D0-D7
SERVO/CONTROL
CODE IDENT 05875
C
DWG NO 77026090
REV A
SHEET 3

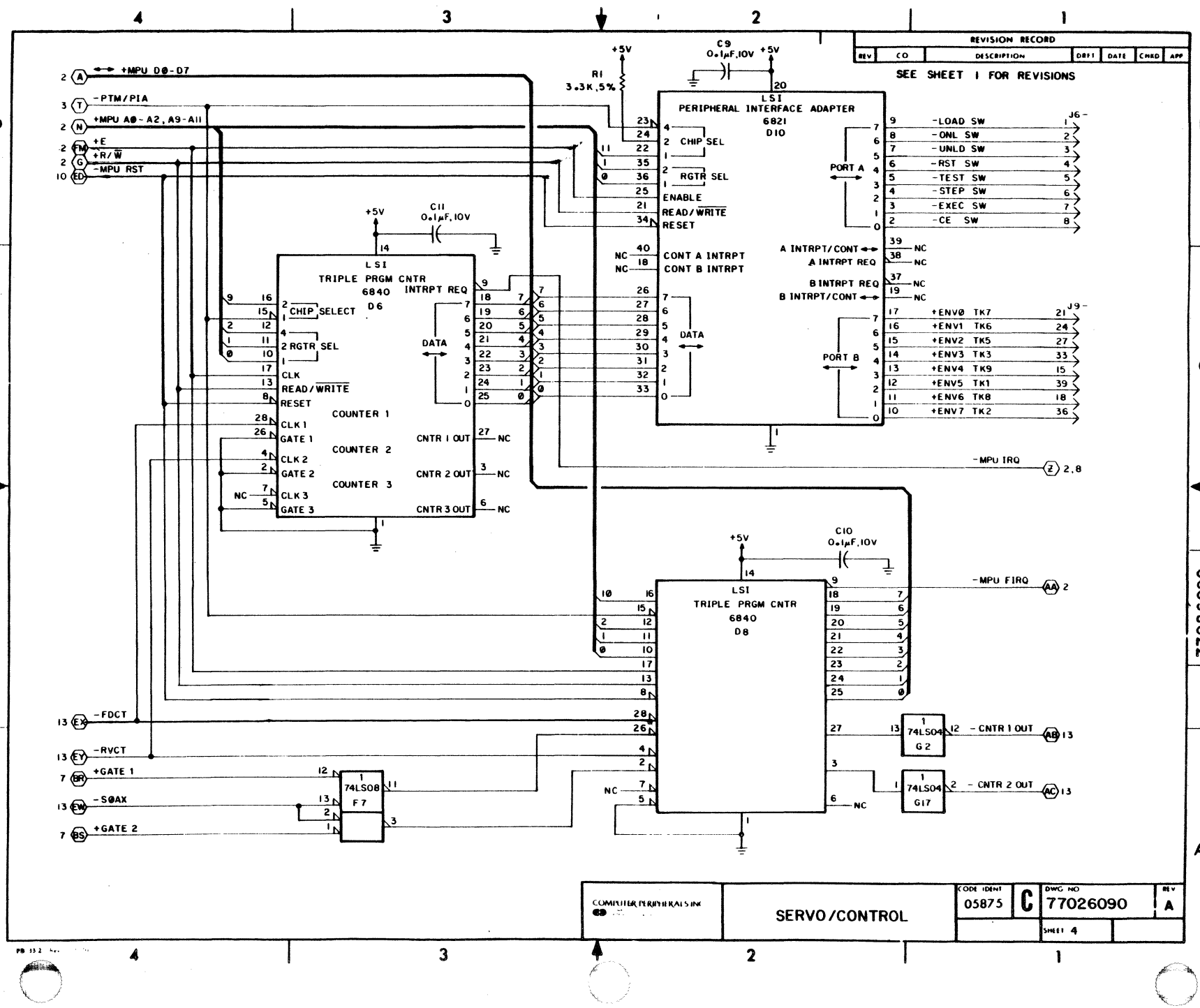
REVISION RECORD
REV | CO | DESCRIPTION | DRFT | DATE | CHKD | APP
SEE SHEET 1 FOR REVISIONS
+MPU D0-D7
-PTM/PIA
+MPU A0-A2, A9-A11
+E
+R/W
-MPU RST
R1 3.3K,5%
C9 0.1µF,10V
LSI PERIPHERAL INTERFACE ADAPTER 6821 D10
CHIP SEL
RGTR SEL
ENABLE
READ/WRITE
RESET
CONT A INTRPT
CONT B INTRPT
DATA
PORT A
PORT B
A INTRPT/CONT
A INTRPT REQ
B INTRPT REQ
B INTRPT/CONT
-LOAD SW
-ONL SW
-UNLD SW
-RST SW
-TEST SW
-STEP SW
-EXEC SW
-CE SW
+ENV0 TK7
+ENV1 TK6
+ENV2 TK5
+ENV3 TK3
+ENV4 TK9
+ENV5 TK1
+ENV6 TK8
+ENV7 TK2
C11 0.1µF,10V
LSI TRIPLE PRGM CNTR 6840 D6
INTRPT REQ
CHIP SELECT
RGTR SEL
CLK
READ/WRITE
RESET
COUNTER 1
COUNTER 2
COUNTER 3
CLK 1
GATE 1
CLK 2
GATE 2
CLK 3
GATE 3
CNTR 1 OUT
CNTR 2 OUT
CNTR 3 OUT
-MPU IRQ
C10 0.1µF,10V
LSI TRIPLE PRGM CNTR 6840 D8
-MPU FIRQ
-FDCT
-RVCT
+GATE 1
-S0AX
+GATE 2
74LS08 F7
74LS04 G2
74LS04 G17
-CNTR 1 OUT
-CNTR 2 OUT
COMPUTER PERIPHERALS INC
SERVO/CONTROL
CODE IDENT 05875
C
DWG NO 77026090
REV A
SHEET 4

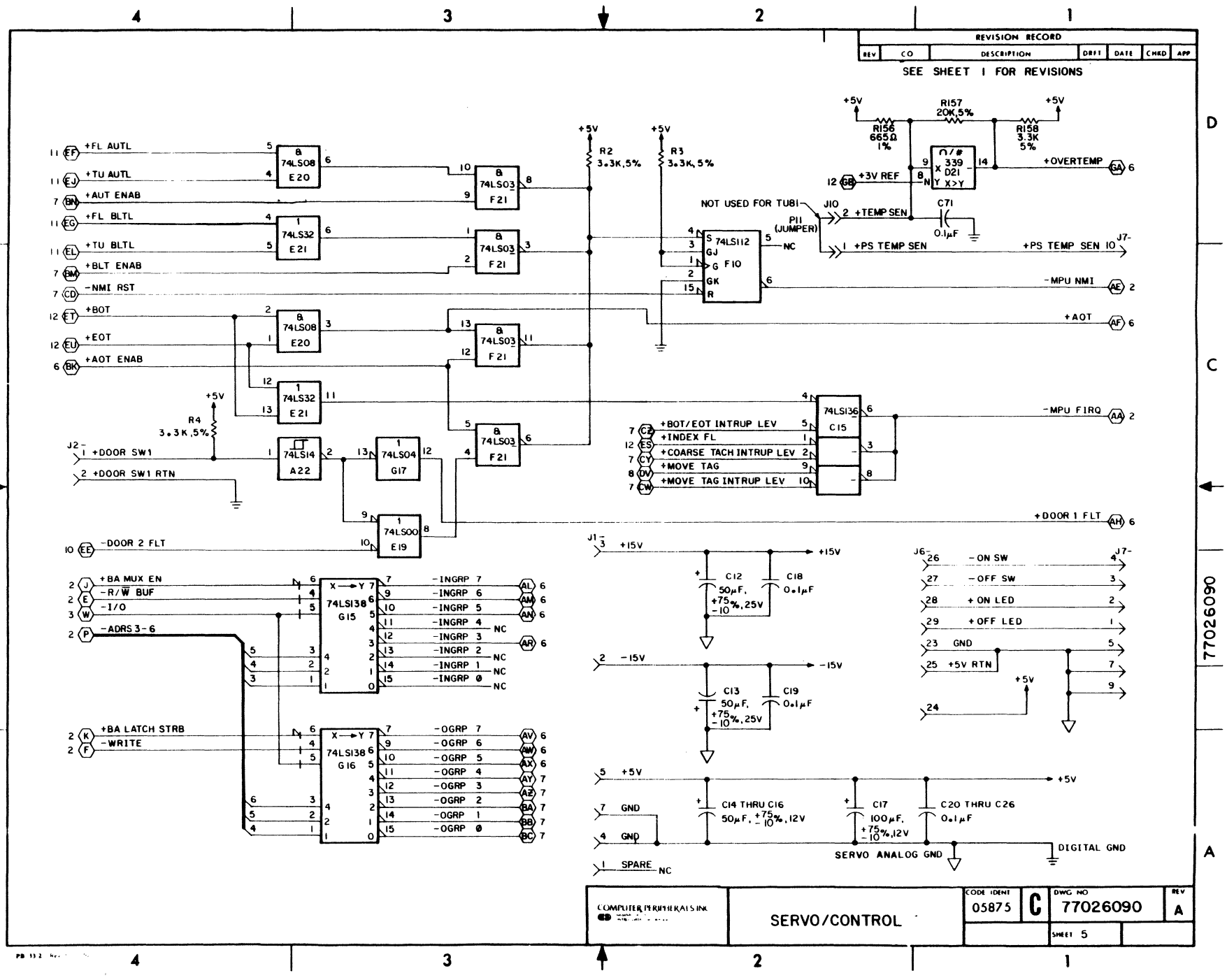
REVISION RECORD
REV | CO | DESCRIPTION | DRFT | DATE | CHKD | APP
SEE SHEET 1 FOR REVISIONS
+FL AUTL
+TU AUTL
+AUT ENAB
+FL BLTL
+TU BLTL
+BLT ENAB
-NMI RST
+BOT
+EOT
+AOT ENAB
+DOOR SW1
+DOOR SW1 RTN
-DOOR 2 FLT
+BA MUX EN
-R/W BUF
-I/O
-ADRS 3-6
+BA LATCH STRB
-WRITE
74LS08 E20
74LS32 E21
74LS03 F21
74LS14 A22
74LS04 G17
74LS00 E19
74LSI38 G15
74LSI38 G16
74LS112 F10
74LS136 C15
R2 3.3K,5%
R3 3.3K,5%
R4 3.3K,5%
R156 665Ω 1%
R157 20K,5%
R158 3.3K 5%
+3V REF
+OVERTEMP
NOT USED FOR TU81
P11 (JUMPER)
+TEMP SEN
+PS TEMP SEN
C71 0.1μF
-MPU NMI
+AOT
-MPU FIRQ
+BOT/EOT INTRUP LEV
+INDEX FL
+COARSE TACH INTRUP LEV
+MOVE TAG
+MOVE TAG INTRUP LEV
+DOOR 1 FLT
-INGRP 7
-INGRP 6
-INGRP 5
-INGRP 4
-INGRP 3
-INGRP 2
-INGRP 1
-INGRP 0
-OGRP 7
-OGRP 6
-OGRP 5
-OGRP 4
-OGRP 3
-OGRP 2
-OGRP 1
-OGRP 0
+15V
-15V
+5V
GND
SPARE
C12 50μF, +75% -10% 25V
C18 0.1μF
C13 50μF, +75% -10% 25V
C19 0.1μF
C14 THRU C16 50μF, +75% -10% 12V
C17 100μF, +75% -10% 12V
C20 THRU C26 0.1μF
SERVO ANALOG GND
DIGITAL GND
-ON SW
-OFF SW
+ON LED
+OFF LED
GND
+5V RTN
COMPUTER PERIPHERALS INC.
SERVO/CONTROL
CODE IDENT 05875
C
DWG NO 77026090
REV A
SHEET 5

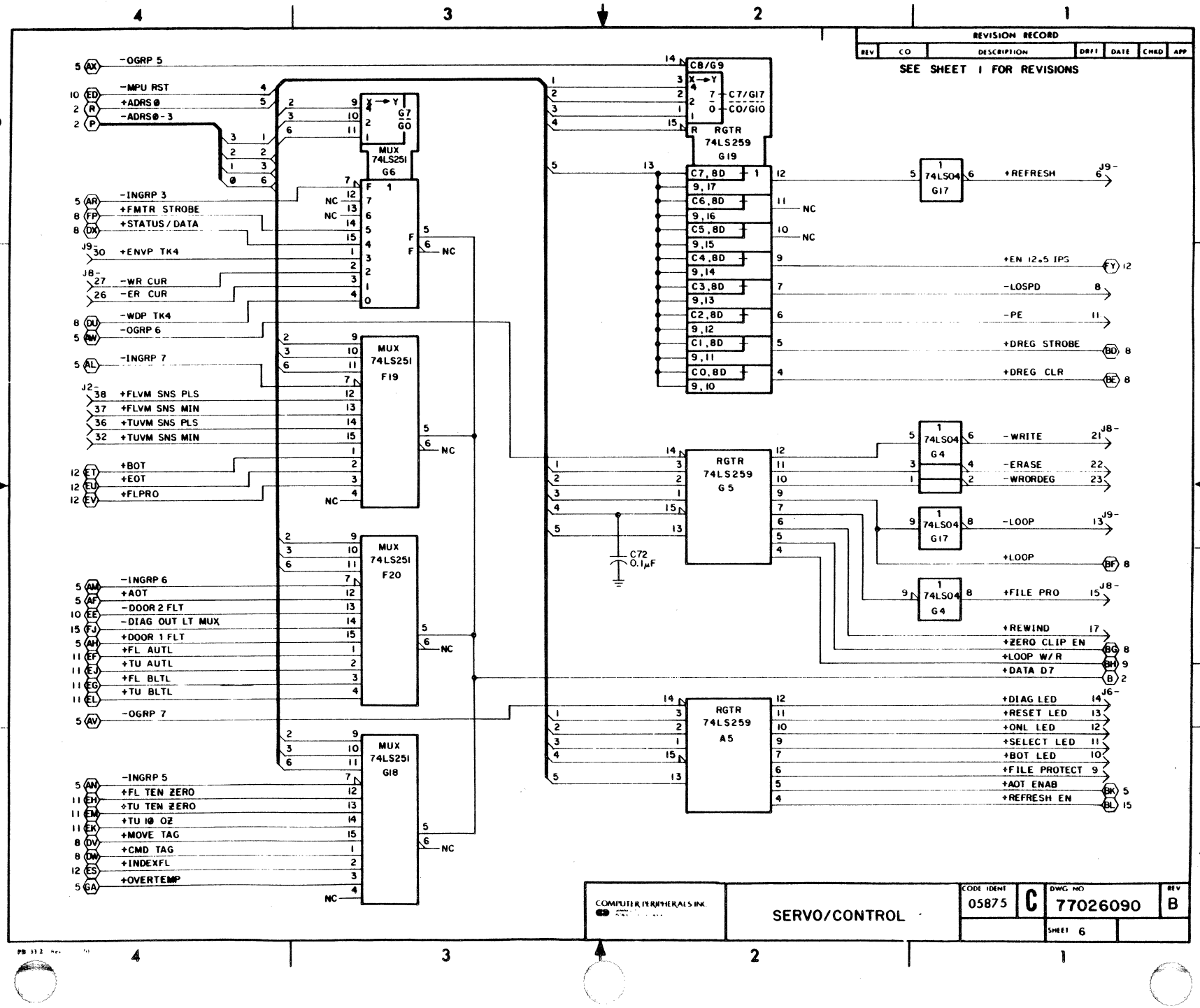
REVISION RECORD
REV | CO | DESCRIPTION | DRFT | DATE | CHKD | APP
SEE SHEET 1 FOR REVISIONS
-OGRP 5
-MPU RST
+ADRS Ø
-ADRS Ø-3
MUX 74LS251 G6
MUX 74LS251 F19
MUX 74LS251 F20
MUX 74LS251 G18
-INGRP 3
+FMTR STROBE
+STATUS/DATA
+ENVP TK4
-WR CUR
-ER CUR
-WDP TK4
-OGRP 6
-INGRP 7
+FLVM SNS PLS
+FLVM SNS MIN
+TUVM SNS PLS
+TUVM SNS MIN
+BOT
+EOT
+FLPRO
-INGRP 6
+AOT
-DOOR 2 FLT
-DIAG OUT LT MUX
+DOOR 1 FLT
+FL AUTL
+TU AUTL
+FL BLTL
+TU BLTL
-OGRP 7
-INGRP 5
+FL TEN ZERO
+TU TEN ZERO
+TU 10 OZ
+MOVE TAG
+CMD TAG
+INDEXFL
+OVERTEMP
C8/G9
C7/G17
C0/G10
RGTR 74LS259 G19
C7,8D
C6,8D
C5,8D
C4,8D
C3,8D
C2,8D
C1,8D
C0,8D
RGTR 74LS259 G5
RGTR 74LS259 A5
C72 0.1μF
74LS04 G17
74LS04 G4
+REFRESH
+EN 12.5 IPS
-LOSPD
-PE
+DREG STROBE
+DREG CLR
-WRITE
-ERASE
-WRORDEG
-LOOP
+LOOP
+FILE PRO
+REWIND
+ZERO CLIP EN
+LOOP W/R
+DATA D7
+DIAG LED
+RESET LED
+ONL LED
+SELECT LED
+BOT LED
+FILE PROTECT
+AOT ENAB
+REFRESH EN
COMPUTER PERIPHERALS INC.
SERVO/CONTROL
CODE IDENT 05875
C
DWG NO 77026090
REV B
SHEET 6

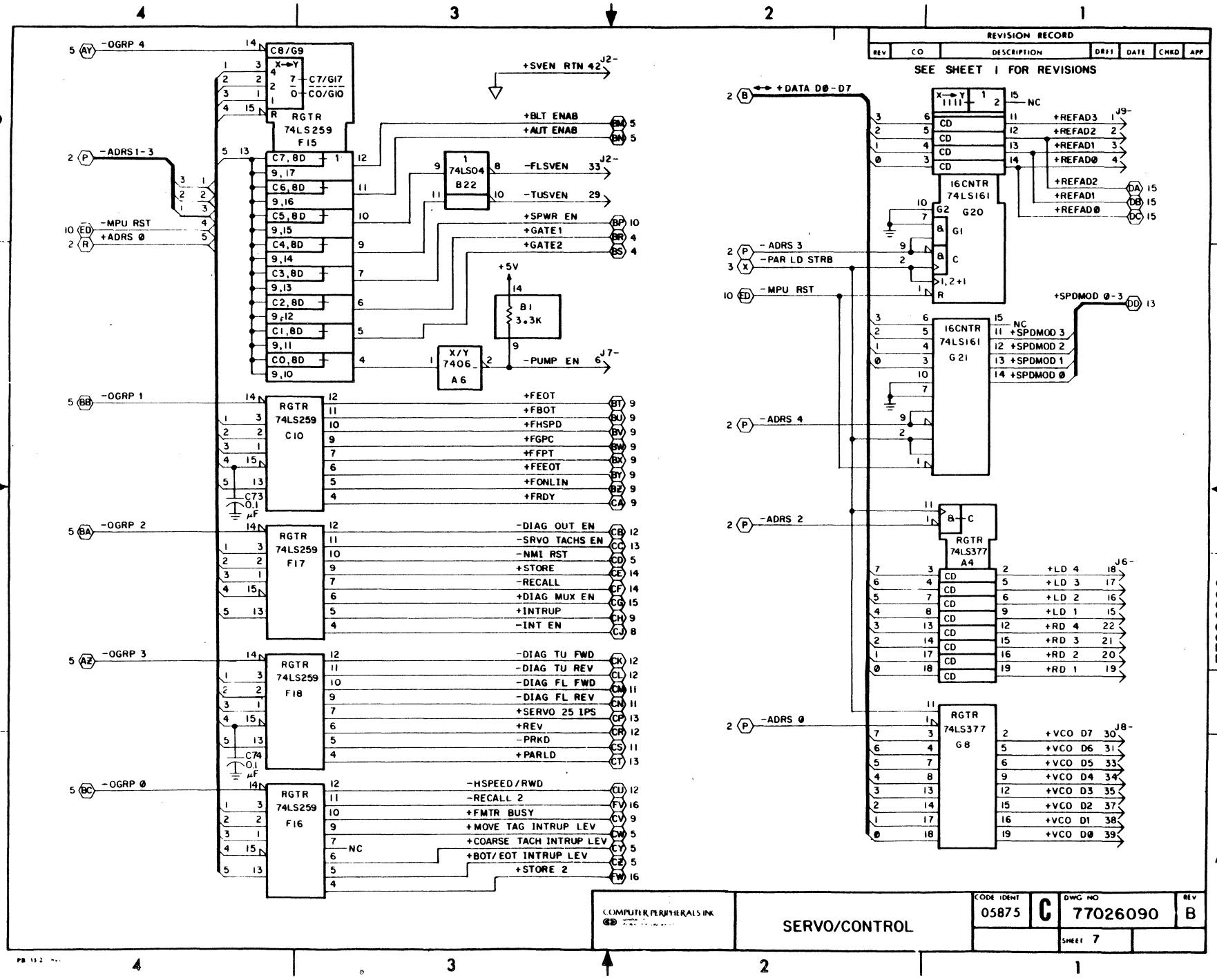
REVISION RECORD
REV | CO | DESCRIPTION | DRFT | DATE | CHKD | APP
SEE SHEET 1 FOR REVISIONS
-OGRP 4
C8/G9
C7/G17
C0/G10
RGTR 74LS259 F15
+SVEN RTN 42 J2-
+BLT ENAB
+AUT ENAB
-ADRS 1-3
C7,8D
C6,8D
C5,8D
C4,8D
C3,8D
C2,8D
C1,8D
C0,8D
74LS04 B22
-FLSVEN 33 J2-
-TUSVEN 29
-MPU RST
+ADRS Ø
+SPWR EN
+GATE1
+GATE2
+5V
B1 3.3K
X/Y 7406 A6
-PUMP EN J7-
-OGRP 1
RGTR 74LS259 C10
+FEOT
+FBOT
+FHSPD
+FGPC
+FFPT
+FEEOT
+FONLIN
+FRDY
C73 0.1 µF
-OGRP 2
RGTR 74LS259 F17
-DIAG OUT EN
-SRVO TACHS EN
-NMI RST
+STORE
-RECALL
+DIAG MUX EN
+INTRUP
-INT EN
-OGRP 3
RGTR 74LS259 F18
-DIAG TU FWD
-DIAG TU REV
-DIAG FL FWD
-DIAG FL REV
+SERVO 25 IPS
+REV
-PRKD
+PARLD
C74 0.1 µF
-OGRP Ø
RGTR 74LS259 F16
-HSPEED/RWD
-RECALL 2
+FMTR BUSY
+MOVE TAG INTRUP LEV
+COARSE TACH INTRUP LEV
+BOT/EOT INTRUP LEV
+STORE 2
NC
+DATA D0-D7
16CNTR 74LS161 G20
+REFAD3
+REFAD2
+REFAD1
+REFAD0
-ADRS 3
-PAR LD STRB
-MPU RST
16CNTR 74LS161 G21
+SPDMOD 0-3
+SPDMOD 3
+SPDMOD 2
+SPDMOD 1
+SPDMOD 0
-ADRS 4
-ADRS 2
RGTR 74LS377 A4
+LD 4
+LD 3
+LD 2
+LD 1
+RD 4
+RD 3
+RD 2
+RD 1
-ADRS Ø
RGTR 74LS377 G8
+VCO D7
+VCO D6
+VCO D5
+VCO D4
+VCO D3
+VCO D2
+VCO D1
+VCO D0
COMPUTER PERIPHERALS INC
SERVO/CONTROL
CODE IDENT 05875
C
DWG NO 77026090
REV B
SHEET 7

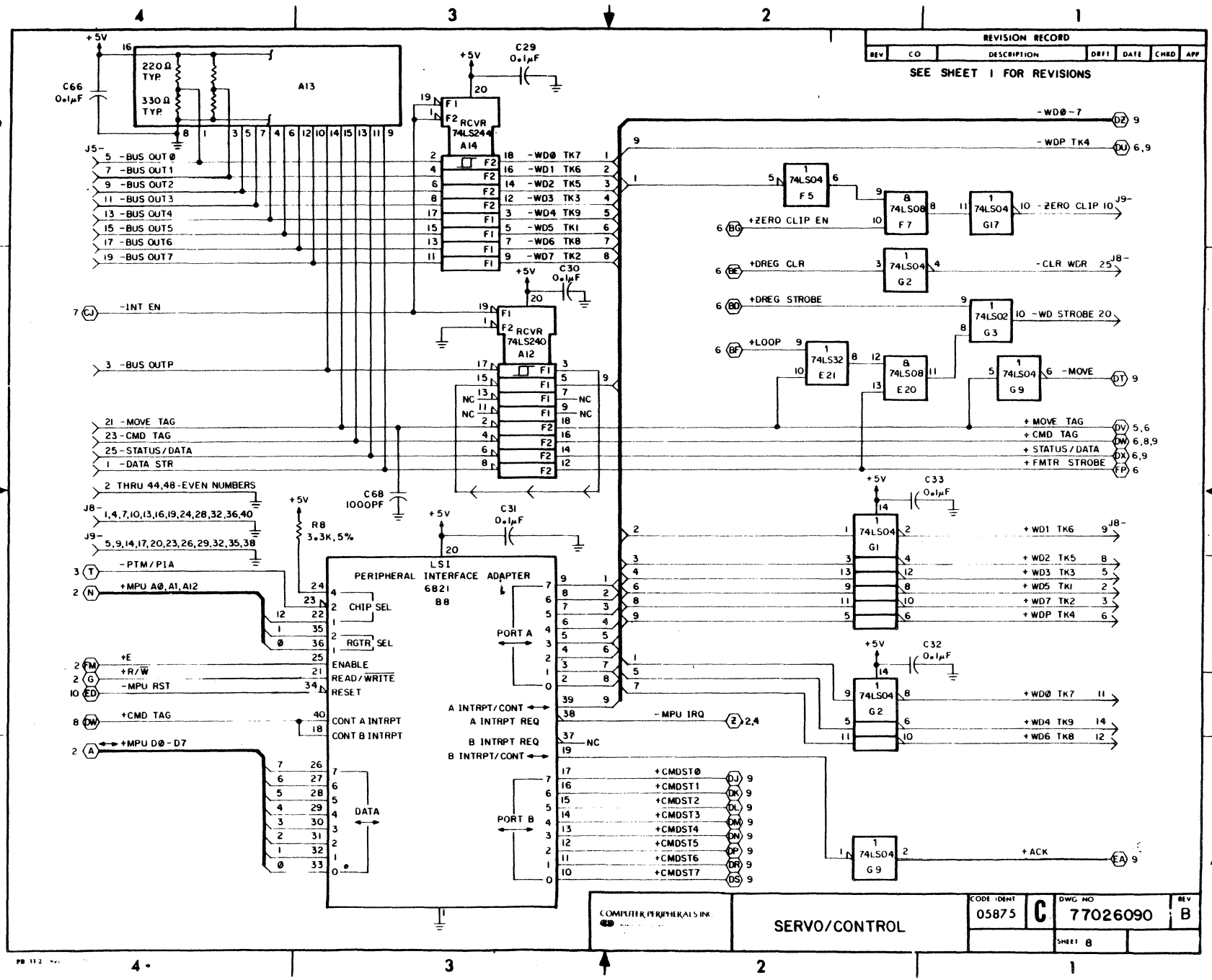
REVISION RECORD
REV | CO | DESCRIPTION | DRFT | DATE | CHKD | APP
SEE SHEET 1 FOR REVISIONS
A13
220Ω TYP
330Ω TYP
C66 0.1μF
C29 0.1μF
C30 0.1μF
C31 0.1μF
C32 0.1μF
C33 0.1μF
C68 1000PF
R8 3.3K, 5%
A14 RCVR 74LS244
A12 RCVR 74LS240
J5- -BUS OUT0
-BUS OUT1
-BUS OUT2
-BUS OUT3
-BUS OUT4
-BUS OUT5
-BUS OUT6
-BUS OUT7
-WD0 TK7
-WD1 TK6
-WD2 TK5
-WD3 TK3
-WD4 TK9
-WD5 TK1
-WD6 TK8
-WD7 TK2
-INT EN
-BUS OUTP
-MOVE TAG
-CMD TAG
-STATUS/DATA
-DATA STR
2 THRU 44,48 -EVEN NUMBERS
J8- 1,4,7,10,13,16,19,24,28,32,36,40
J9- 5,9,14,17,20,23,26,29,32,35,38
-PTM/PIA
+MPU A0, A1, A12
+E
+R/W
-MPU RST
+CMD TAG
+MPU D0-D7
LSI PERIPHERAL INTERFACE ADAPTER 6821 88
CHIP SEL
RGTR SEL
ENABLE
READ/WRITE
RESET
CONT A INTRPT
CONT B INTRPT
DATA
PORT A
PORT B
A INTRPT/CONT
A INTRPT REQ
B INTRPT REQ
B INTRPT/CONT
-MPU IRQ
+CMDST0
+CMDST1
+CMDST2
+CMDST3
+CMDST4
+CMDST5
+CMDST6
+CMDST7
-WD0-7
-WDP TK4
+ZERO CLIP EN
-ZERO CLIP
+DREG CLR
-CLR WCR
+DREG STROBE
-WD STROBE
+LOOP
-MOVE
+MOVE TAG
+CMD TAG
+STATUS/DATA
+FMTR STROBE
+WD1 TK6
+WD2 TK5
+WD3 TK3
+WD5 TK1
+WD7 TK2
+WDP TK4
+WD0 TK7
+WD4 TK9
+WD6 TK8
+ACK
74LS04 F5
74LS08 F7
74LS04 G17
74LS04 G2
74LS02 G3
74LS32 E21
74LS08 E20
74LS04 G9
74LS04 G1
74LS04 G2
74LS04 G9
COMPUTER PERIPHERALS INC.
SERVO/CONTROL
CODE IDENT 05875
C
DWG NO 77026090
REV B
SHEET 8

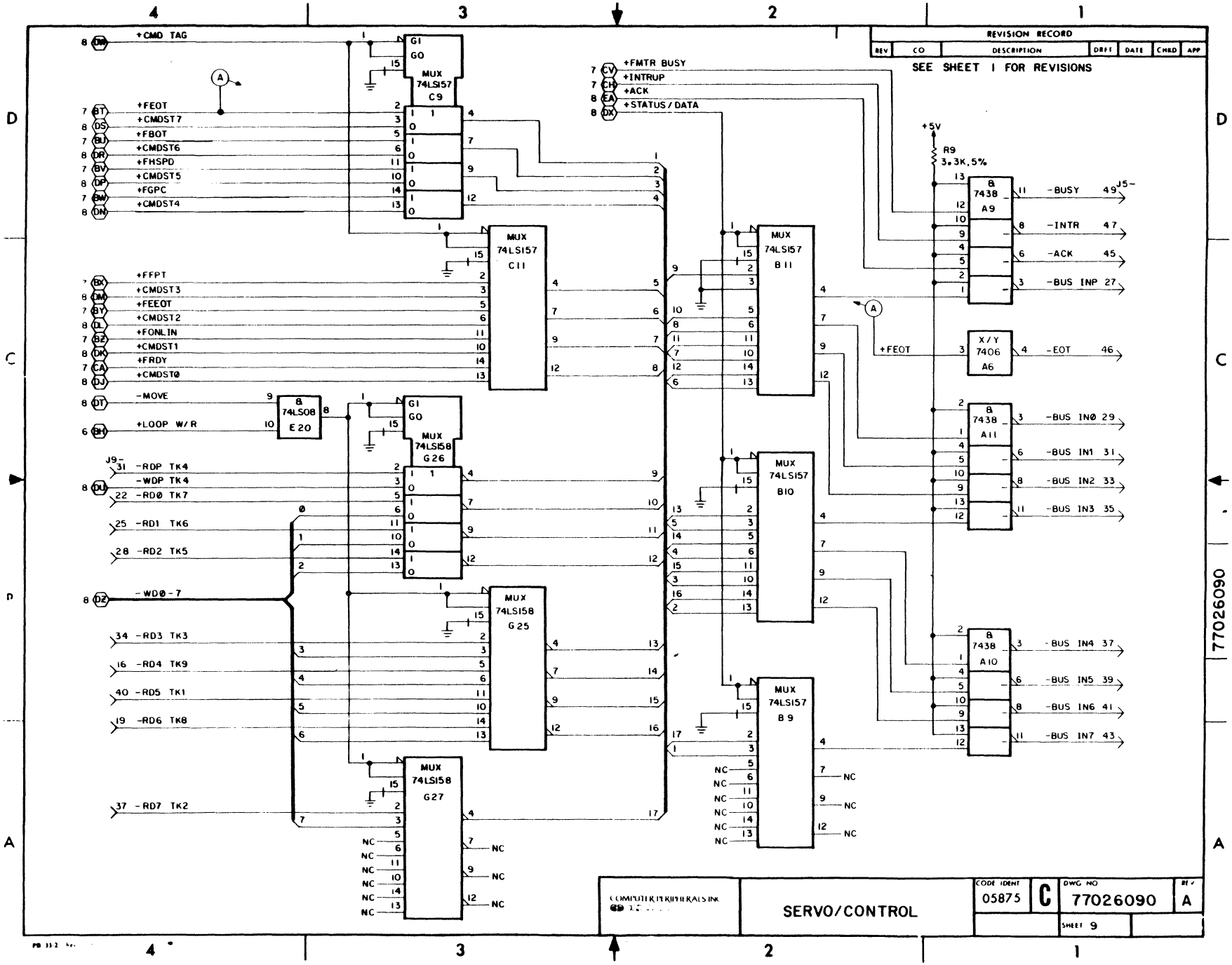
REVISION RECORD
REV | CO | DESCRIPTION | DRFT | DATE | CHKD | APP
SEE SHEET 1 FOR REVISIONS
+CMD TAG
+FEOT
+CMDST7
+FBOT
+CMDST6
+FHSPD
+CMDST5
+FGPC
+CMDST4
+FFPT
+CMDST3
+FEEOT
+CMDST2
+FONLIN
+CMDST1
+FRDY
+CMDST0
-MOVE
+LOOP W/R
-RDP TK4
-WDP TK4
-RD0 TK7
-RD1 TK6
-RD2 TK5
-WD0-7
-RD3 TK3
-RD4 TK9
-RD5 TK1
-RD6 TK8
-RD7 TK2
+FMTR BUSY
+INTRUP
+ACK
+STATUS/DATA
MUX 74LS157 C9
MUX 74LS157 C11
MUX 74LS158 G26
MUX 74LS158 G25
MUX 74LS158 G27
MUX 74LS157 B11
MUX 74LS157 B10
MUX 74LS157 B9
8 74LS08 E20
+5V
R9 3.3K,5%
8 7438 A9
8 7438 A11
8 7438 A10
X/Y 7406 A6
-BUSY 49
-INTR 47
-ACK 45
-BUS INP 27
-EOT 46
-BUS IN0 29
-BUS IN1 31
-BUS IN2 33
-BUS IN3 35
-BUS IN4 37
-BUS IN5 39
-BUS IN6 41
-BUS IN7 43
COMPUTER PERIPHERALS INC.
SERVO/CONTROL
CODE IDENT 05875
C
DWG NO 77026090
REV A
SHEET 9

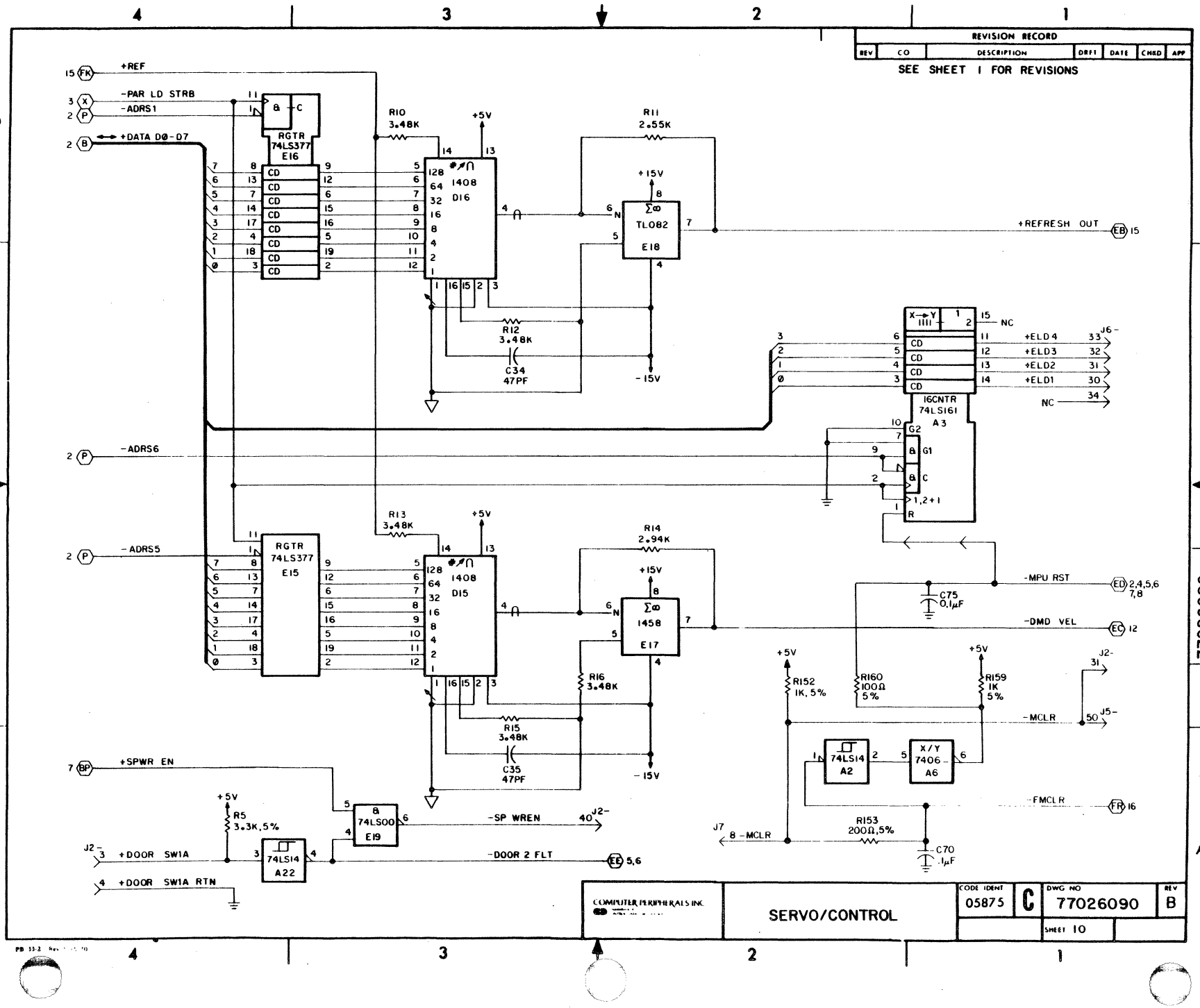
REVISION RECORD
REV | CO | DESCRIPTION | DRFT | DATE | CHKD | APP
SEE SHEET 1 FOR REVISIONS
+REF
-PAR LD STRB
-ADRS1
+DATA D0-D7
RGTR 74LS377 E16
R10 3.48K
+5V
1408 D16
R11 2.55K
+15V
TL082 E18
+REFRESH OUT
R12 3.48K
C34 47PF
-15V
16CNTR 74LS161 A3
NC
+ELD4
+ELD3
+ELD2
+ELD1
-ADRS6
-ADRS5
RGTR 74LS377 E15
R13 3.48K
1408 D15
R14 2.94K
1458 E17
-MPU RST
C75 0.1μF
-DMD VEL
R16 3.48K
R15 3.48K
C35 47PF
R152 1K, 5%
R160 100Ω 5%
R159 1K 5%
-MCLR
74LS14 A2
X/Y 7406 A6
-FMCLR
+SPWR EN
R5 3.3K,5%
74LS00 E19
-SP WREN
+DOOR SW1A
74LS14 A22
-DOOR 2 FLT
+DOOR SW1A RTN
R153 200Ω,5%
C70 .1μF
COMPUTER PERIPHERALS INC.
SERVO/CONTROL
CODE IDENT 05875
C
DWG NO 77026090
REV B
SHEET 10

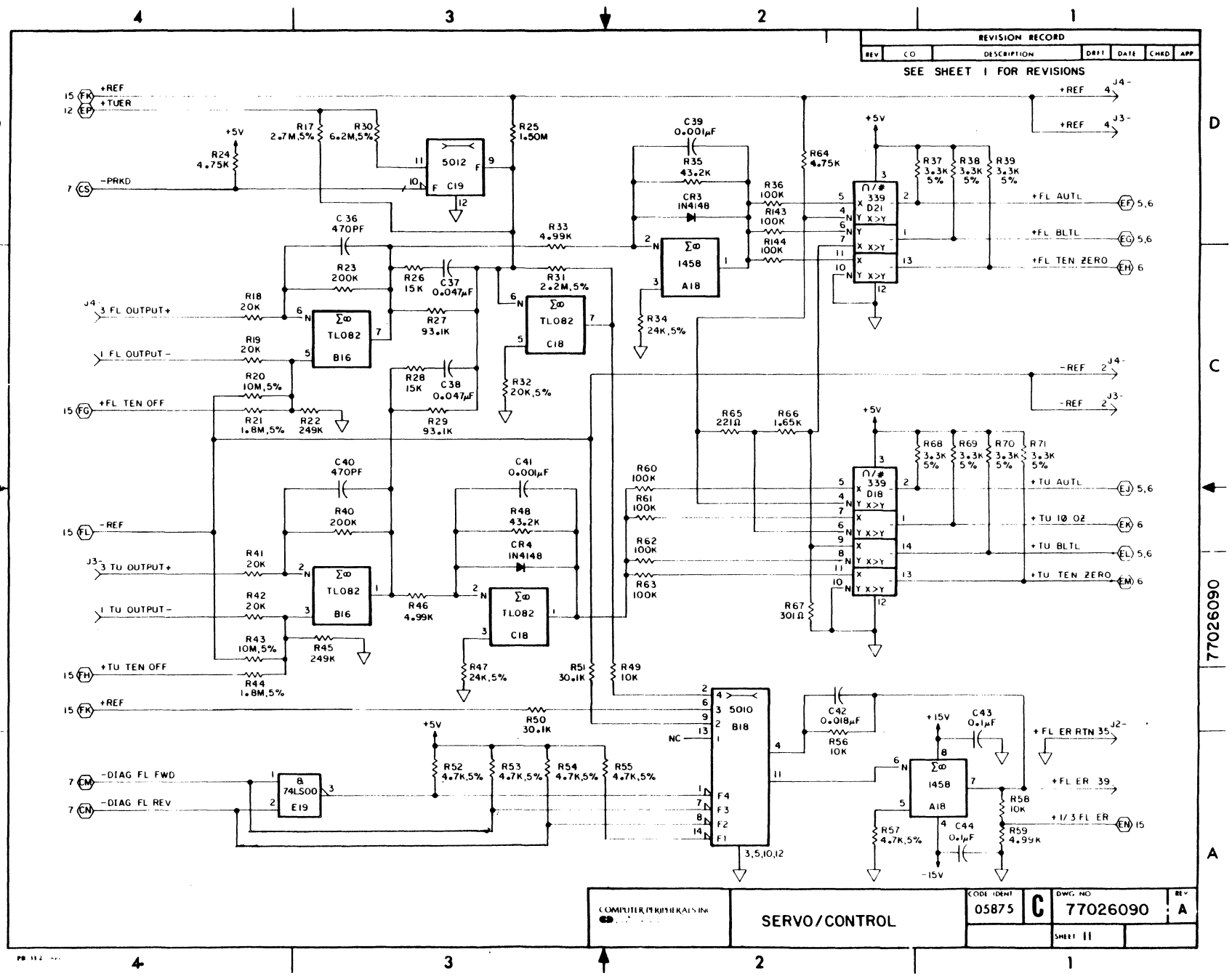
REVISION RECORD
REV | CO | DESCRIPTION | DRFT | DATE | CHKD | APP
SEE SHEET 1 FOR REVISIONS
+REF
+TUER
-PRKD
+FL TEN OFF
+TU TEN OFF
-DIAG FL FWD
-DIAG FL REV
3 FL OUTPUT+
1 FL OUTPUT-
3 TU OUTPUT+
1 TU OUTPUT-
-REF
+FL AUTL
+FL BLTL
+FL TEN ZERO
+TU AUTL
+TU 10 OZ
+TU BLTL
+TU TEN ZERO
+FL ER RTN 35
+FL ER 39
+1/3 FL ER
SERVO/CONTROL
CODE IDENT 05875
DWG NO 77026090
REV A
SHEET 11

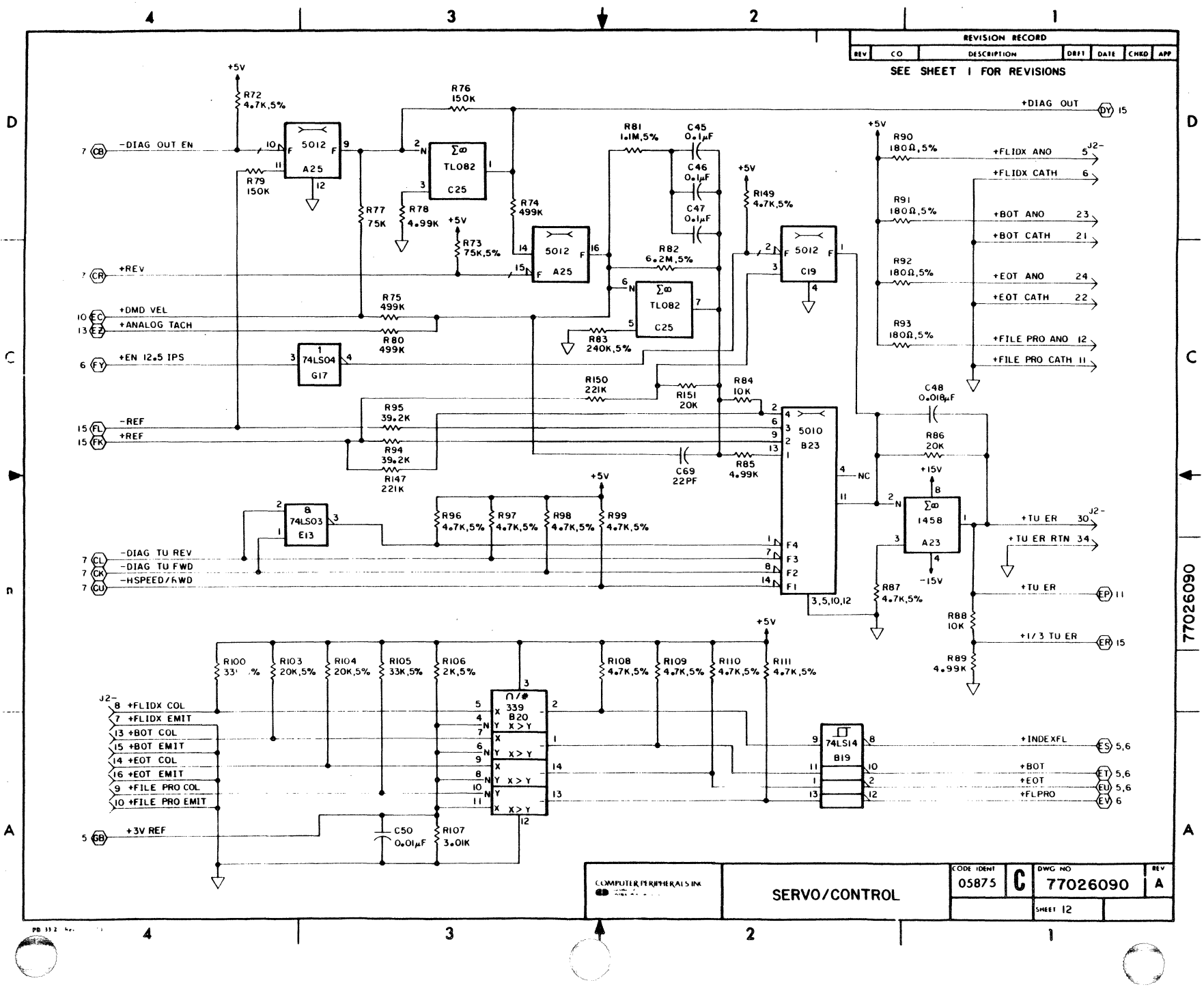
REVISION RECORD
REV | CO | DESCRIPTION | DRFT | DATE | CHKD | APP
SEE SHEET 1 FOR REVISIONS
+5V
R72 4.7K,5%
R76 150K
+DIAG OUT
-DIAG OUT EN
R79 150K
5012 A25
TL082 C25
R77 75K
R78 4.99K
R73 75K,5%
R74 499K
R81 1.1M,5%
C45 0.1µF
C46 0.1µF
C47 0.1µF
R149 4.7K,5%
R82 6.2M,5%
5012 C19
R83 240K,5%
+REV
+DMD VEL
+ANALOG TACH
R75 499K
R80 499K
+EN 12.5 IPS
74LS04 G17
R150 221K
R151 20K
R84 10K
C69 22PF
R85 4.99K
5010 B23
R95 39.2K
R94 39.2K
R147 221K
-REF
+REF
C48 0.018µF
R86 20K
+15V
1458 A23
-15V
R87 4.7K,5%
R88 10K
R89 4.99K
R90 180Ω,5%
R91 180Ω,5%
R92 180Ω,5%
R93 180Ω,5%
+FLIDX ANO
+FLIDX CATH
+BOT ANO
+BOT CATH
+EOT ANO
+EOT CATH
+FILE PRO ANO
+FILE PRO CATH
+TU ER
+TU ER RTN
+1/3 TU ER
74LS03 E13
R96 4.7K,5%
R97 4.7K,5%
R98 4.7K,5%
R99 4.7K,5%
-DIAG TU REV
-DIAG TU FWD
-HSPEED/FWD
R100 33[illegible]%
R103 20K,5%
R104 20K,5%
R105 33K,5%
R106 2K,5%
R108 4.7K,5%
R109 4.7K,5%
R110 4.7K,5%
R111 4.7K,5%
+FLIDX COL
+FLIDX EMIT
+BOT COL
+BOT EMIT
+EOT COL
+EOT EMIT
+FILE PRO COL
+FILE PRO EMIT
+3V REF
C50 0.01µF
R107 3.01K
339 B20
74LS14 B19
+INDEXFL
+BOT
+EOT
+FLPRO
COMPUTER PERIPHERALS INC.
SERVO/CONTROL
CODE IDENT 05875
C
DWG NO 77026090
REV A
SHEET 12

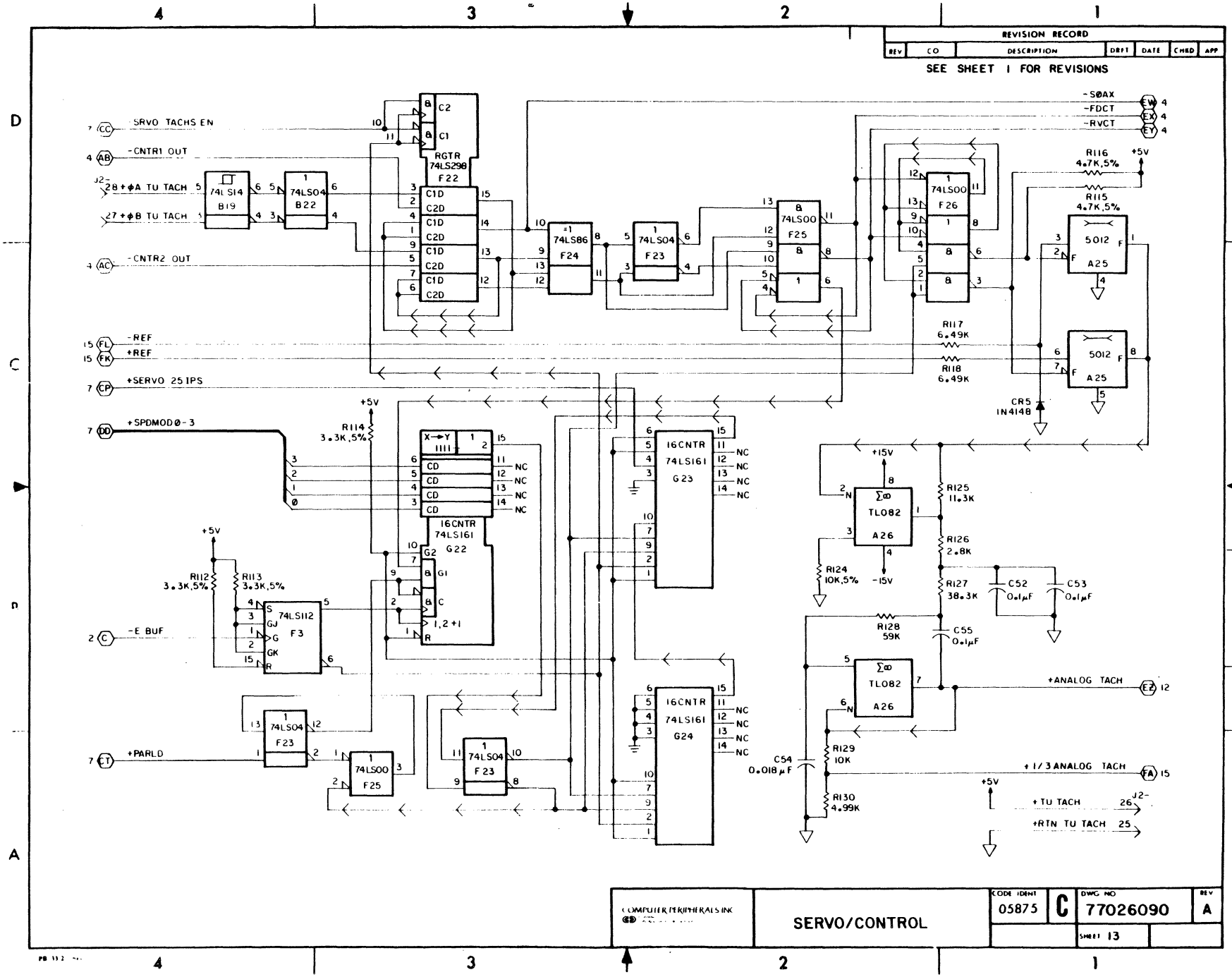
REVISION RECORD
REV | CO | DESCRIPTION | DRFT | DATE | CHKD | APP
SEE SHEET 1 FOR REVISIONS
SRVO TACHS EN
-CNTR1 OUT
28 +ΦA TU TACH
27 +ΦB TU TACH
-CNTR2 OUT
-REF
+REF
+SERVO 25 IPS
+SPDMOD Ø-3
-E BUF
+PARLD
-SØAX
-FDCT
-RVCT
+ANALOG TACH
+1/3 ANALOG TACH
+TU TACH
+RTN TU TACH
RGTR 74LS298 F22
16CNTR 74LS161 G23
16CNTR 74LS161 G22
16CNTR 74LS161 G24
74LS14 B19
74LS04 B22
74LS86 F24
74LS04 F23
74LS00 F25
74LS00 F26
74LS112 F3
TL082 A26
5012 A25
R112 3.3K,5%
R113 3.3K,5%
R114 3.3K,5%
R115 4.7K,5%
R116 4.7K,5%
R117 6.49K
R118 6.49K
R124 10K,5%
R125 11.3K
R126 2.8K
R127 38.3K
R128 59K
R129 10K
R130 4.99K
C52 0.1μF
C53 0.1μF
C54 0.018μF
C55 0.1μF
CR5 IN4148
+5V
+15V
-15V
COMPUTER PERIPHERALS INC
SERVO/CONTROL
CODE IDENT 05875
C
DWG NO 77026090
REV A
SHEET 13

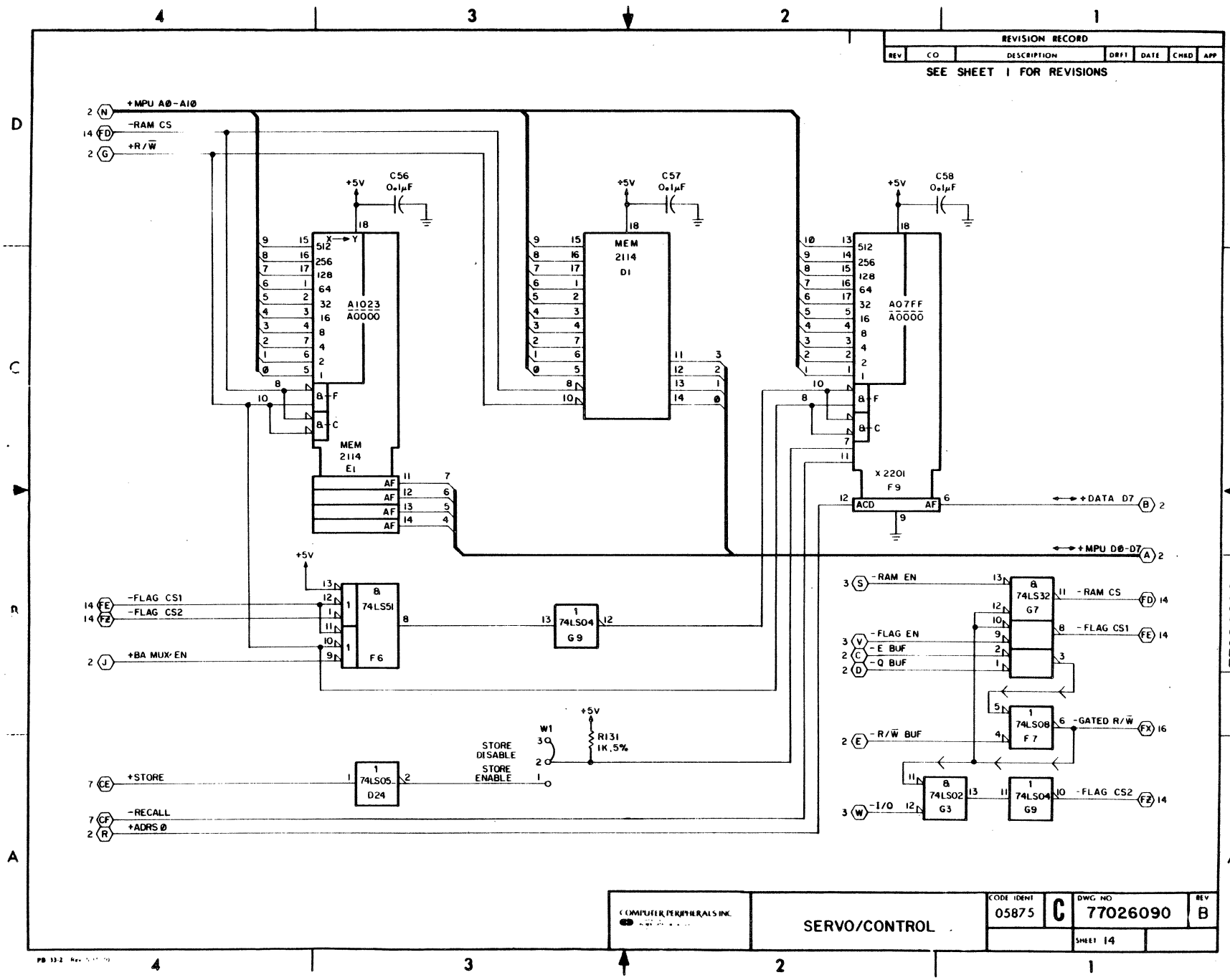
REVISION RECORD
REV | CO | DESCRIPTION | DRFT | DATE | CHKD | APP
SEE SHEET 1 FOR REVISIONS
+MPU A0-A10
-RAM CS
+R/W
+5V
C56 0.1µF
C57 0.1µF
C58 0.1µF
512
256
128
64
32
16
8
4
2
1
A1023
A0000
A07FF
A0000
MEM 2114 E1
MEM 2114 D1
X 2201 F9
74LS51 F6
74LS04 G9
74LS32 G7
74LS08 F7
74LS02 G3
74LS04 G9
74LS05 D24
-FLAG CS1
-FLAG CS2
+BA MUX EN
+DATA D7
+MPU D0-D7
-RAM EN
-RAM CS
-FLAG EN
-FLAG CS1
-E BUF
-Q BUF
-R/W BUF
-GATED R/W
-I/O
-FLAG CS2
+STORE
-RECALL
+ADRS 0
W1
R131 1K,5%
STORE DISABLE
STORE ENABLE
COMPUTER PERIPHERALS INC.
SERVO/CONTROL
CODE IDENT 05875
C
DWG NO 77026090
REV B
SHEET 14

| REVISION RECORD | | | | | | |
|---|---|---|---|---|---|---|
| REV | CO | DESCRIPTION | DRFT | DATE | CHKD | APP |

SEE SHEET 1 FOR REVISIONS

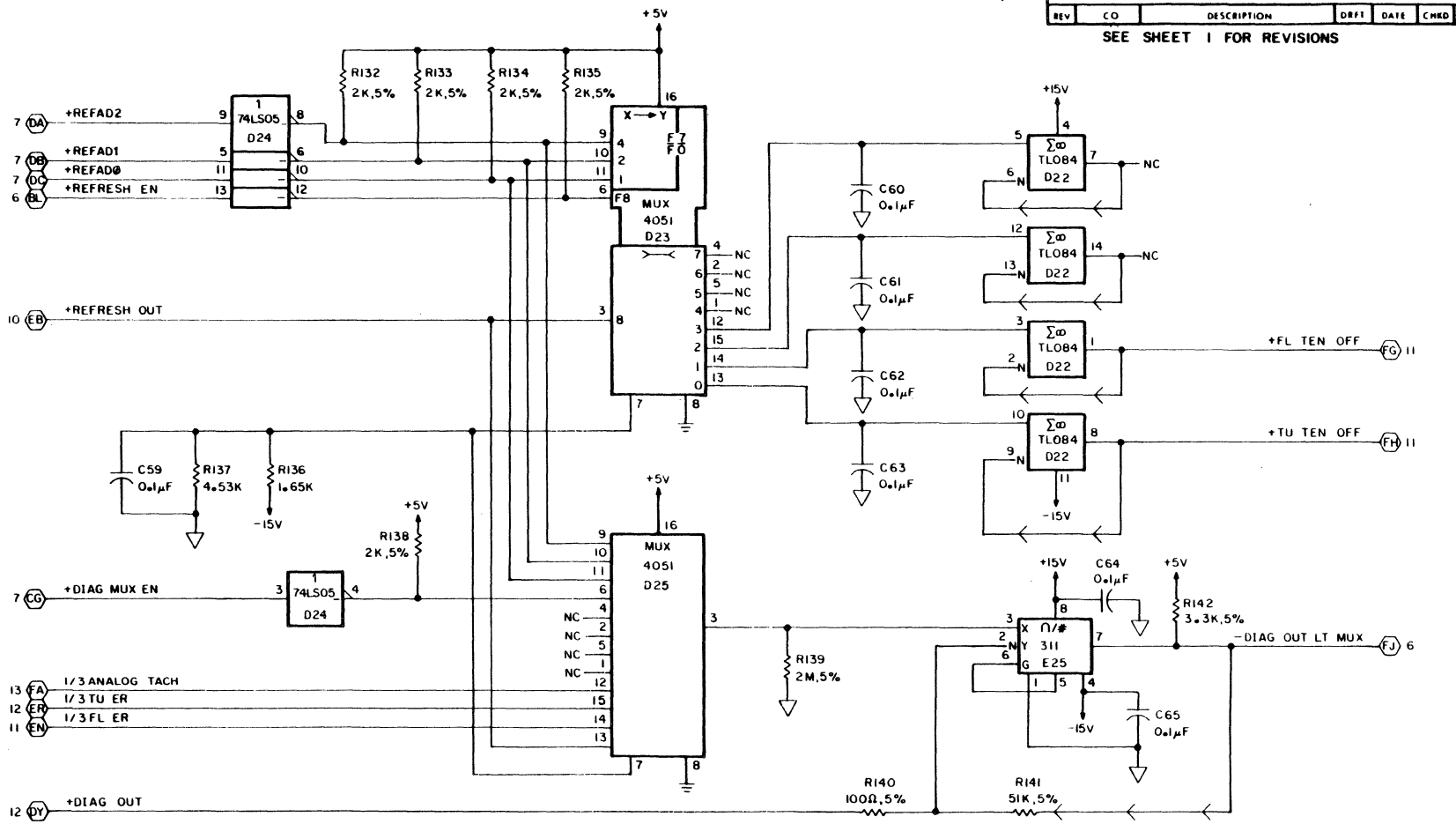


| COMPUTER PERIPHERALS INC. | SERVO / CONTROL | CODE IDENT 05875 | C | DWG NO 77026090 | REV A |
|---|---|---|---|---|---|
| | | | | SHEET 15 | |

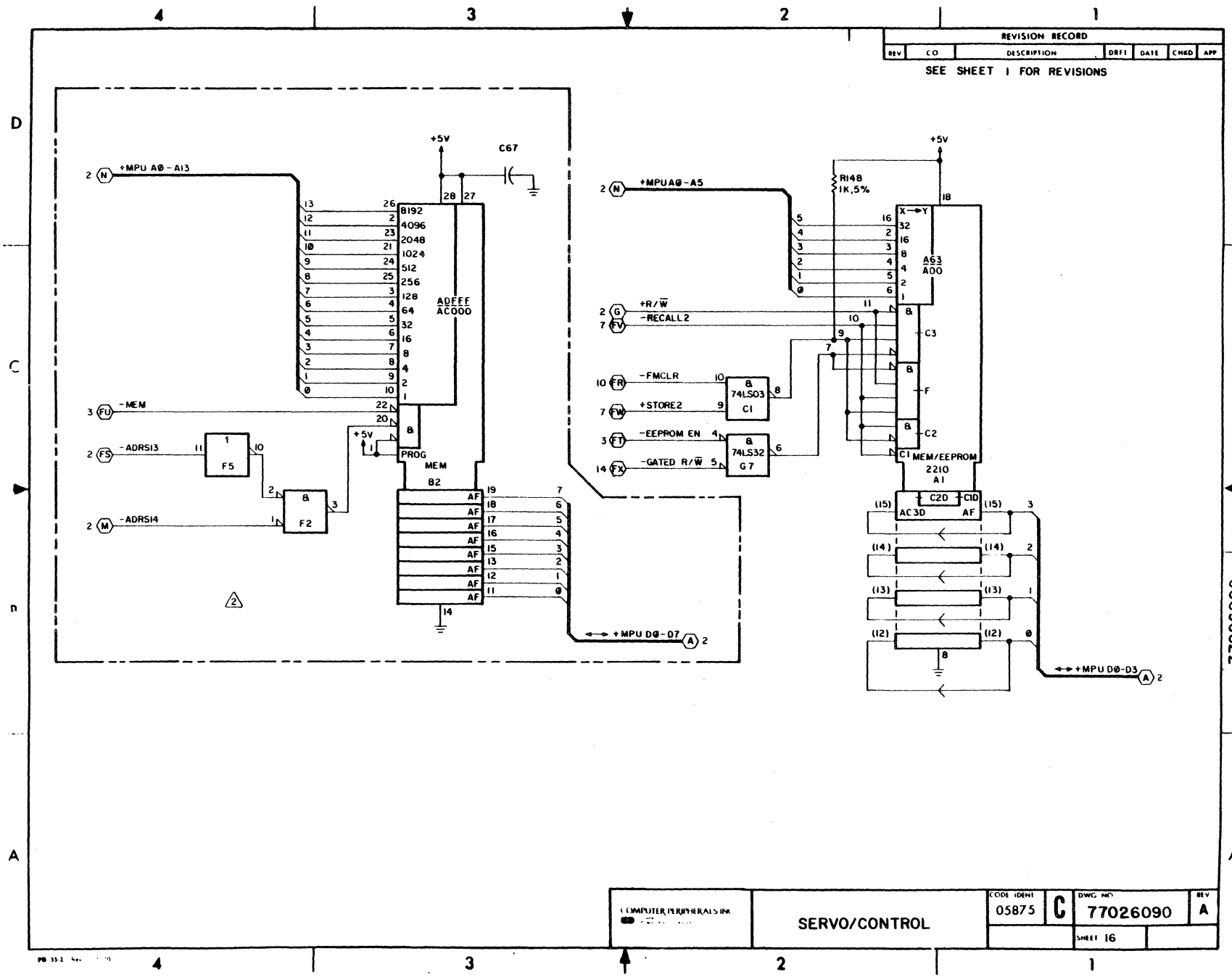
REVISION RECORD
REV | CO | DESCRIPTION | DRFT | DATE | CHKD | APP
SEE SHEET 1 FOR REVISIONS
+MPU A0 - A13
C67
+5V
8192
4096
2048
1024
512
256
128
64
32
16
8
4
2
1
ADFFF
AC000
-MEM
-ADRSI3
-ADRSI4
F5
F2
PROG
MEM
B2
+MPU D0-D7
+MPUA0-A5
R148
1K,5%
+R/W
-RECALL2
-FMCLR
+STORE2
-EEPROM EN
-GATED R/W
74LS03
C1
74LS32
G7
A63
A00
C3
F
C2
C1
MEM/EEPROM
2210
A1
C2D
C1D
AC3D
AF
+MPU D0-D3
COMPUTER PERIPHERALS INC.
SERVO/CONTROL
CODE IDENT
05875
C
DWG NO
77026090
REV
A
SHEET 16

## GENERAL DESCRIPTION

In this section, you are furnished with the information needed to identify and remove/replace defective components of the STU. After replacement, test procedures are supplied to verify correct operation. The maintenance philosophy for the STU is that only complete PWAs and assemblies are replaced in the field. Troubleshooting and repair of individual circuit components and sub-assembly parts is not recommended, and therefore, such information is not presented.

The maintenance information is divided into two major areas: trouble analysis, and removal/replacement procedures.

## TROUBLE ANALYSIS

The principles involved in trouble analysis of the STU consist of interpreting fault codes which in the event of failure appear on the diagnostic display on the operator control panel. The trouble analysis section provides information on the operation of the diagnostic portion of the control panel, interpretation of fault codes, description of diagnostic tests, and lists the corrective action to restore the STU to an operable condition.

The trouble analysis information is presented in the following order:

1. CE procedures before arriving at the customer's location (pre-site) and after arrival (on-site).
2. Use of corrective action tables.
3. Diagnostic test information.
4. Structured analysis method (SAM) tables.
5. Functional description of CE tests.

## REMOVAL/REPLACEMENT PROCEDURES

This portion of the maintenance section contains instructions on how to remove and replace all field replaceable parts or assemblies of the STU. Location and identification of assemblies can be found in Section 7 - Parts Identification.

Reference into the removal/replacement procedures is primarily via the structured analysis method (SAM) tables contained in the trouble analysis portion of this section. Verification tests follow each of the replacement procedures so that the integrity of the replaced assembly can be ensured, prior to returning the transport on-line.

Table 6-1. REFERENCED MAINTENANCE AIDS

| AID | USED ON |
|---|---|
| Digital voltmeter | Voltage checks |
| Graham Epoch 480 Tape | Magnetic head replacement<br>Verification check<br>Write driver, read amplifier, and servo-control PWA replacement |

# TROUBLE ANALYSIS

## GENERAL INFORMATION

The trouble analysis information consists of diagnostic test procedures, structured analysis method (SAM) tables, and a description of the diagnostic tests.

NOTES

1. The procedures contained in this section of the manual are addressed to and intended for use by a qualified customer engineer, familiar with the operation of the streaming tape unit (STU). Under no circumstances should these procedures be performed by persons other than fully qualified maintenance personnel.

2. The operator diagnostic procedures referenced in this section of the manual are expanded for maintenance personnel use. Diagnostics for use by the operator are contained in the OPERATION section of Volume I, 49762900.

The diagnostic tests designed into the STU are functions that can be initiated through the operator control panel or on-line by the host. The host controller is capable of monitoring STU status through the STATUS TRANSFER command. A CHANNEL LOOPBACK command is also provided to exercise the interface logic of the STU.

Even when not running diagnostics, the microprocessor tests for many operational fault conditions while operating on-line. These conditions are indicated by fault codes appearing on the control panel display. The fault condition is indicated by the lighting of the RESET indicator and the appropriate fault code being displayed. Faults which occur while tape is loaded may initiate a controlled removal by the microprocessor of servo and write circuitry power to prevent tape damage.

## CUSTOMER ENGINEER PROCEDURES

Your trouble analysis procedures consist of a pre-site analysis of the reported problem, and on-site procedures to isolate and correct verified faults.

### PRE-SITE PROCEDURES

When the trouble call is received from the site, proceed as follows:

1. Consult tables 6-2 and 6-3, Corrective Action Matrices, to determine if operator action is required. Some STU malfunctions or fault codes require operator action in the form of visual checks or cleaning. Instruct the operator to perform diagnostic test 01 after corrective actions have been completed.

2. If the fault persists following completion of all operator actions, consult table 6-2 and 6-3 for identification of assemblies related to the reported malfunction or fault code. Take as many of these assemblies as are available to the site to prevent unnecessary call-backs.

### Corrective Action Matrices

The malfunction/failing assembly matrix and fault code/failing assembly matrix (tables 6-2 and 6-3) list malfunctions or fault codes and possible assemblies which may cause the fault condition. The purpose of these tables is to provide you with a list of related assemblies prior to your reporting to the customer site. Assemblies listed under the individual malfunction or fault codes are arranged in a most probable fault order. Also contained on the matrices in tables 6-2 and 6-3 are those actions, listed in sequence (A, B, C), which should be performed by the operator. Verify the performance of these actions before making an on-site call.

In addition to the assemblies listed, the table may direct you to request the operator to perform diagnostic test 02 or test 03. Execution of these tests may help you to isolate the failure to fewer possible assemblies; the tests are especially helpful if an assembly listed in table 6-3 is not immediately available. Test 02 is recommended if diagnostic test 01 ends in fault codes 22, 24, 26, 30, 31 or 36. Tables 6-4 thru 6-8 list possible failing assemblies for test 02 termination codes.

Test 03 is recommended if test 01 ends in fault codes 03, 04, 06, 25, 30, 31, 32, 33, 35, 36, 48 or 52. Tables 6-9 thru 6-19 list possible failing assemblies for test 03 termination codes.

Table 6-2. MALFUNCTION/ASSEMBLY FAILURE MATRIX

| MALFUNCTION / OPERATOR CORRECTIVE ACTION | AFTER PRESSING THE CIRCUIT BREAKER TO THE 1 POSITION, THE LOGIC OFF INDICATOR DOES NOT LIGHT. | STU DISPLAYS 00 ON POWER UP. | STU POWERS DOWN WHILE IN USE. | OPERATOR PANEL SWITCH DOES NOT OPERATE. | STU OPERATES WITH OPERATOR DOOR OPEN. | FILE PROTECT INDICATOR DOES NOT LIGHT WHEN A WRITE PROTECTED TAPE IS LOADED. | TAKE UP REEL DOES NOT TURN FREELY. | SUPPLY REEL DOES NOT TURN FREELY. | SUPPLY REEL HUB CANNOT BE LATCHED. | EXCESSIVE PNEUMATIC NOISE. |
|---|---|---|---|---|---|---|---|---|---|---|
| ENSURE STU IS PLUGGED INTO A LIVE SUPPLY | A | | | | | | | | | |
| ENSURE OPERATION IS LEGAL | | | | A | | | | | | |
| CHANGE TAPE | | | | | | | | | A | |
| FAILING ASSEMBLY | | | | | | | | | | |
| SERVO-CONTROL | 8 | 1 | 3 | 2 | 2 | 2 | | | | |
| READ AMPLIFIER | 5 | | | | | | | | | |
| WRITE DRIVER | 4 | | | | | | | | | |
| FORMATTER READ | 7 | | | | | | | | | |
| FORMATTER WRITE | 6 | | | | | | | | | |
| INTERFACE | 9 | | | | | | | | | |
| POWER SUPPLY | 1 | 2 | 1 | | | | | | | |
| POWER DRIVER | | | 2 | | | | | | | |
| OPERATOR PANEL | 3 | | | 1 | | 3 | | | | |
| COMPRESSOR | | | | | | | | | | 1 |
| PRESSURE REGULATOR | | | | | | | | | | 2 |
| SUPPLY MOTOR/TACH | | | 5 | | | | | 1 | | |
| SUPPLY HUB | | | | | | 4 | | 2 | 1 | |
| TAKE-UP MOTOR/TACH | | | 4 | | | | 1 | | | |
| TAKE UP HUB | | | | | | | 2 | | | |
| DOOR SWITCH | | | | | 1 | | | | | |
| FILE PROTECT SENSOR | | | | | | 1 | | | | |
| COOLING FAN | 2 | | | | | | | | | |

Table 6-3. FAULT CODE MATRIX

| TEST 01 FAULT CODE | 00 | 01 | 02 | 03 | 04 | 05 | 06 | 07 | 08 | 09 | 10 | 11 | 12 | 13 |
|---|---|---|---|---|---|---|---|---|---|---|---|---|---|---|
| OPER. CORRECTIVE ACTION | | | | | | | | | | | | | | |
| Test Successful | X | | | | | | | | | | | | | |
| Latch Hub Correctly | | | | | | | | | | | | | A | |
| Thread Tape Correctly | | | | | | | | | | | | A | | A |
| Clean Head/Tape Path/Hubs | | A | A | A | A | A | A | A | A | | | | C | |
| Change Tape | | B | B | B | B | B | B | B | B | | | | B | |
| Close Door | | | | | | | | | | | A | | | |
| Install Wr. Protect Ring | | | | | | | | | | | | | | |
| FAILING ASSEMBLY | | | | | | | | | | | | | | |
| Servo-Control | | 4 | 4 | 1 | 1 | 4 | 4 | 4 | 4 | 1 | 2 | 2 | 1 | 3 |
| Read Amplifier | | 3 | 3 | 8 | 8 | 1 | 2 | 1 | 2 | | | | | |
| Write Driver | | 2 | 2 | 3 | 6 | 3 | 1 | 3 | 1 | | | | | |
| Formatter Read | | | | 4 | 4 | 2 | 5 | 2 | 5 | 3 | | | | |
| Formatter Write | | 5 | 5 | 7 | 5 | 5 | 6 | 5 | 6 | 2 | | | | |
| Interface | | | | | | | | | | | | | | |
| Power Supply | | | | | | | | | | | | | | 2 |
| Power Driver | | | | 6 | 3 | | 7 | | | | | | | |
| Control Panel | | | | | | | | | | | | | | |
| Compressor | | | | | | | | | | | | | | 1 |
| Filter | | | | | | | | | | | | | | 4 |
| Supply Air Bearing Sensor | | | | | | | | | | | | | | |
| Take-Up Air Bearing Sensor | | | | | | | | | | | | | | |
| Head (Amplitude Error) | | 1 | 1 | | | | | | | | | | | |
| Head (Data Reliability) | | | | 5 | 7 | 6 | 3 | 6 | 3 | | | | | |
| Write Cable | | 6 | 6 | 9 | 9 | 7 | 9 | | 7 | | | | | |
| Supply Motor/Tach | | | | | | | | | | | | | 3 | |
| Supply Hub | | | | | | | | | | | | | 2 | |
| Take-Up Motor/Tach | | | | 2 | 2 | 8 | 8 | | | | | | 5 | |
| EOT/BOT Sensor | | | | | | | | | | | | 1 | 4 | 6 |
| Door Interlock Switch | | | | | | | | | | | 1 | | | |
| File Protect Sensor | | | | | | | | | | | | | | |
| Pressure Regulator | | | | | | | | | | | | | | 5 |
| Cooling Fan | | | | | | | | | | | | | | |
| Temperature Sensor | | | | | | | | | | | | | | |
| FUTHER ISOLATION ACTION | | | | | | | | | | | | | | |
| Run Test 02 (See NOTE 1) | | | | | | | | | | | | | | |
| Run Test 03 (See NOTE 1) | | | | X | X | | X | | | | | | | |

NOTE 1. Run tests 02 and 03 only if test 01 directs their use to further identify the probable failing assembly. For termination code/failing assembly matrix, refer to tables 6-4 thru 6-19.

Table 6-3. FAULT CODE MATRIX (Cont'd)

| TEST 01 FAULT CODE | 14 | 15 | 16 | 17 | 18 | 20 | 21 | 22 | 23 | 24 | 25 | 26 | 27 | 29 |
|---|---|---|---|---|---|---|---|---|---|---|---|---|---|---|
| OPER. CORRECTIVE ACTION | | | | | | | | | | | | | | |
| Test Successful | | | | | | | | | | | | | | |
| Latch Hub Correctly | | | | | | | | A | | | A | | | |
| Thread Tape Correctly | | | | A | | | | | | | | | | A |
| Clean Head/Tape Path/Hubs | | | | | | | | B | | | B | | | |
| Change Tape | A | | A | B | | | | C | | | C | | | B |
| Close Door | | | | | | | | | | | | | | |
| Install Wr. Protect Ring | | | B | | | | | | | | | | | |
| See NOTE 2 | | X | | | | | | | | | | | | |
| FAILING ASSEMBLY | | | | | | | | | | | | | | |
| Servo-Control | 2 | 2 | 2 | 1 | 1 | 2 | 2 | 4 | 1 | 3 | 2 | 4 | 1 | 2 |
| Read Amplifier | | | | | | | | | | | | | | |
| Write Driver | | | | | | | | | | | | | | |
| Formatter Read | | | | | | | | | | | | | | |
| Formatter Write | | | 3 | 2 | | | | | | | | | | |
| Interface | | | | | | | | | | | | | | |
| Power Supply | | | | | | | | | | | | | | |
| Power Driver | | | | | | | | 5 | | 1 | 4 | 3 | | |
| Control Panel | | 1 | | | | | | | | | | | | |
| Compressor | | | | | | | | | | | | | | |
| Filter | | | | | | | | | | | | | | |
| Supply Air Bearing Sensor | | | | | | 1 | | | | | | | | |
| Take-Up Air Bearing Sensor | | | | | | | 1 | | | | | | | |
| Head (Amplitude Error) | | | | | | | | | | | | | | |
| Head (Data Reliability) | | | | | | | | | | | | | | |
| Write Cable | | | | | | | | | | | | | | |
| Supply Motor/Tach | | | | | | | | 3 | 2 | 2 | | 2 | 2 | |
| Supply Hub | | | 4 | | | | | 1 | | | 1 | | | |
| Take-Up Motor/Tach | | | | | | | | 2 | | | 3 | 1 | | |
| EOT/BOT Sensor | 1 | | | | | | | | | | | | | 1 |
| Door Interlock Switch | | | | | | | | | | | | 5 | | |
| File Protect Sensor | | | 1 | | | | | | | | | | | |
| Pressure Regulator | | | | | | | | | | | | | | |
| Cooling Fan | | | | | | | | | | | | | | |
| Temperature Sensor | | | | | | | | | | | | | | |
| FURTHER ISOLATION ACTION | | | | | | | | | | | | | | |
| Run Test 02 (See NOTE 1) | | | | | | | | X | | X | | | | |
| Run Test 03 (See NOTE 1) | | | | | | | | | | | X | X | | |

NOTE 1. Run tests 02 and 03 only if test 01 directs their use to further identify the probable failing assembly. For termination code/failing assembly matrix, refer to tables 6-4 thru 6-19.

NOTE 2. Fault can be caused by operator pressing RESET/FAULT switch during LOAD or UNLOAD operation.

Table 6-3. FAULT CODE MATRIX (Cont'd)

| TEST 01 FAULT CODE | 30 | 31 | 32 | 33 | 34 | 35 | 36 | 37 | 38 | 41 | 44 | 47 | 48 |
|---|---|---|---|---|---|---|---|---|---|---|---|---|---|
| OPER. CORRECTIVE ACTION | | | | | | | | | | | | | |
| Test Successful | | | | | | | | | | | | | |
| Clean Hub Pads | | | | | | | | | | | | | |
| Thread Tape Correctly | | | | | | | | | | | | | |
| Clean Head/Tape Path/Hubs | A | A | | | | | A | | | | A | | A |
| Change Tape | | | | | | | B | | | | B | | B |
| Close Door | | | | | | | | | | | | | |
| FAILING ASSEMBLY | | | | | | | | | | | | | |
| Servo-Control | 1 | 1 | 1 | 2 | 1 | 2 | 1 | 1 | 1 | 1 | 1 | 1 | 1 |
| Read Amplifier | | | | | | | 13 | | | | 8 | | |
| Write Driver | | | | | | | 11 | | | | 6 | | |
| Formatter Read | | | | | | | 9 | | | | 4 | | |
| Formatter Write | | | | | | | 10 | | | | 5 | | |
| Interface | | | | | | | | | | | | | |
| Power Supply | | | | | | | | | | | | | |
| Power Driver | 8 | 8 | 3 | | | | 8 | 2 | | | 3 | | |
| Control Panel | | | | | | | | | | | | | |
| Compressor | 2 | 2 | 5 | | | | 2 | | | | | | |
| Filter | 6 | 6 | 4 | | | | 6 | | | | | | |
| Supply Air Bearing Sensor | 3 | 3 | | | | | 3 | | | | | | |
| Take-Up Air Bearing Sensor | 4 | 4 | | | | | 4 | | | | | | |
| Head (Amplitude Error) | | | | | | | | | | | | | |
| Head (Data Reliability) | | | | | | | 12 | | | | 7 | | |
| Write Cable | | | | | | | 14 | | | | 9 | | |
| Supply Motor/Tach | | | | | | | | 3 | | | | | 3 |
| Supply Hub | | | | | | | | | | | | | |
| Take-Up Motor/Tach | 7 | 7 | 2 | 1 | | 1 | 7 | | | | 2 | | 2 |
| EOT/BOT Sensor | | | | | | | | | | | | | |
| Door Interlock Switch | | | | | | | | | | | | | |
| File Protect Sensor | | | | | | | | | | | | | |
| Pressure Regulator | 5 | 5 | 6 | | | | 5 | | | | | | |
| Cooling Fan | | | | | | | | | | | | | |
| Temperature Sensor | | | | | | | | | | | | | |
| Further isolation action. | | | | | | | | | | | | | |
| Run Test 02 (See NOTE 1) | X | X | | | | | X | | | | | | |
| Run Test 03 (See NOTE 1) | | | X | X | | X | | | | | | | X |

NOTE 1. Run tests 02 and 03 only if test 01 directs their use to further identify the probable failing assembly. For termination code/failing assembly matrix, refer to tables 6-4 thru 6-19.

Table 6-3. FAULT CODE MATRIX (Cont'd)

| TEST 01 FAULT CODE | 50 | 51 | 52 | 53 | 54 | 55 | 56 | 59 | 60 | 61 | 62 | 63 | 64 | |
|---|---|---|---|---|---|---|---|---|---|---|---|---|---|---|
| OPER. CORRECTIVE ACTION | | | | | | | | | | | | | | |
| Test Successful | | | | | | | | | | | | | | |
| Clean Hub Pads | | | A | | | | | | | | | | | |
| Thread Tape Correctly | | | | | | | | | | | | | | |
| Clean Head/Tape Path/Hubs | | | | | | | | | | | | | | |
| Change Tape | | | | | | | | | | | | | | |
| Close Door | | | | | | | | | | | | | | |
| See NOTE 2 | | | | | | | | | X | X | | | | |
| FAILING ASSEMBLY | | | | | | | | | | | | | | |
| Servo-Control | 1 | 1 | 1 | 1 | 3 | 1 | 2 | | 2 | 2 | | | | |
| Read Amplifier | | | | | 2 | | | | | | | | | |
| Write Driver | | | | | 1 | | | | | | | | | |
| Formatter Read | | | | | | | | | | | | 1 | 1 | |
| Formatter Write | | | | | | | 1 | | | | 1 | 2 | 2 | |
| Interface | | | | | | | 3 | 1 | | | | | | |
| Power Supply | | | | | | | | | | | | | | |
| Power Driver | | | | | | | | | | | | | | |
| Control Panel | | | | | | | | | 1 | 1 | | | | |
| Compressor | | | | | | | | | | | | | | |
| Filter | | | | | | | | | | | | | | |
| Supply Air Bearing Sensor | | | | | | | | | | | | | | |
| Take-Up Air Bearing Sensor | | | | | | | | | | | | | | |
| Head (Amplitude Error) | | | | | | | | | | | | | | |
| Head (Data Reliability) | | | | | 4 | | | | | | | | | |
| Write Cable | | | | | 5 | | | | | | | | | |
| Supply Motor/Tach | | | 3 | | | | | | | | | | | |
| Supply Hub | | | 4 | | | | | | | | | | | |
| Take-Up Motor/Tach | | | 2 | | | | | | | | | | | |
| EOT/BOT Sensor | | | | | | | | | | | | | | |
| Door Interlock Switch | | | | | | | | | | | | | | |
| File Protect Sensor | | | | | | | | | | | | | | |
| Pressure Regulator | | | | | | | | | | | | | | |
| Cooling Fan | | | | | | | | | | | | | | |
| Temperature Sensor | | | | | | | | | | | | | | |
| Run Test 02 (See NOTE 1) | | | | | | | | | | | | | | |
| Run Test 03 (See NOTE 1) | | | X | | | | | | | | | | | |

NOTE 1. Run tests 02 and 03 only if test 01 directs their use to further identify the probable failing assembly. For termination code/failing assembly matrix, refer to tables 6-4 thru 6-19.

NOTE 2. Fault can be caused by the operator pressing any operator panel switches for longer than 15 seconds during the power-up cycle.

Table 6-3. FAULT CODE MATRIX (Cont'd)

| TEST 01 FAULT CODE | 65 | 66 | 67 | 68 | 69 | |
|---|---|---|---|---|---|---|
| OPER. CORRECTIVE ACTION | | | | | | |
| Test Successful | | | | | | |
| Clean Hub Pads | | | | | | |
| Thread Tape Correctly | | | | | | |
| Clean Head/Tape Path/Hubs | | | | | | |
| Change Tape | | | | | | |
| Close Door | | | | | | |
| See NOTE 2 | | | | | | |
| FAILING ASSEMBLY | | | | | | |
| Servo-Control | | | | | 1 | |
| Read Amplifier | | | | | | |
| Write Driver | | | | | | |
| Formatter Read | 1 | | | | | |
| Formatter Write | | 2 | | | 2 | |
| Interface | | 1 | 1 | 1 | 3 | |
| Power Supply | | | | | | |
| Power Driver | | | | | | |
| Control Panel | | | | | | |
| Compressor | | | | | | |
| Filter | | | | | | |
| Supply Air Bearing Sensor | | | | | | |
| Take-Up Air Bearing Sensor | | | | | | |
| Head (Amplitude Error) | | | | | | |
| Head (Data Reliability) | | | | | | |
| Write Cable | | | | | | |
| Supply Motor/Tach | | | | | | |
| Supply Hub | | | | | | |
| Take-Up Motor/Tach | | | | | | |
| EOT/BOT Sensor | | | | | | |
| Door Interlock Switch | | | | | | |
| File Protect Sensor | | | | | | |
| Pressure Regulator | | | | | | |
| Cooling Fan | | | | | | |
| Temperature Sensor | | | | | | |
| Run Test 02 (See NOTE 1) | | | | | | |
| Run Test 03 (See NOTE 1) | | | | | | |

NOTE 1. Run tests 02 and 03 only if test 01 directs their use to further identify the probable failing assembly. For termination code/failing assembly matrix, refer to tables 6-4 thru 6-19.

NOTE 2. Fault can be caused by the operator pressing any operator panel switches for longer than 15 seconds during the power-up cycle.

If test 01 ends in fault code 26, run test 02 to further specify the probable failing assembly. Refer to table 6-6 for the termination code/probable failing assembly matrix.

Table 6-6. TEST 02 TERMINATION CODES FOLLOWING TEST 01 FAULT CODE 26, AND TEST 03

| TERMINATION CODE | 70 | 71 | 81 | 82 | 84 | OTHER CODES |
|---|---|---|---|---|---|---|
| OPERATOR ACTION | | | | | | |
| Illegal Op Sequence | A | | | | | |
| Ensure Tape is Thd'd | | A | | | | |
| Repeat Test | | B | | | | |
| FAILING ASSEMBLY | | | | | | |
| Servo-Control | | | 3 | 3 | | 1 |
| Power Driver | | | 1 | 1 | | |
| Supply Motor/Tach | | | 2 | 2 | | |
| Take-Up Motor/Tach | | | | | 1 | |
| Door Interlock Sw | | | 4 | 4 | 2 | |

If test 01 ends in fault codes 30 or 31, run test 02 to further specify the probable failing assembly. Refer to table 6-7 for the termination code/probable failing assembly matrix.

Table 6-7. TEST 02 TERMINATION CODES FOLLOWING TEST 01 FAULT CODES 30 or 31

| TERMINATION CODE | 70 | 71 | 72 | 73 | 74 | 75 | 84 | 89 | 90 | 91 | 92 | OTHER CODES |
|---|---|---|---|---|---|---|---|---|---|---|---|---|
| OPERATOR ACTION | | | | | | | | | | | | |
| Illegal Op Sequence | A | | | | | | | | | | | |
| Ensure Tape is Thd'd | | A | | | | | | | | | | |
| Repeat Test | | B | | | | | | | | | | |
| FAILING ASSEMBLY | | | | | | | | | | | | |
| Servo-Control | | 1 | | 2 | | 2 | 2 | | | 3 | | 2 |
| Power Driver | | | | | | | | | | | | 3 |
| Compressor | | | 3 | 4 | 3 | 4 | | | | 2 | 2 | |
| Filter | | | 2 | | 2 | | | | | | 1 | |
| Supply Air Brg Sensor | | | | | 1 | 1 | | 1 | | | | |
| Take-Up Air Brg Sensor | | | 1 | 1 | | | | | 1 | | | |
| Take-Up Motor/Tach | | | | | | | 1 | | | | | 1 |
| Pressure Regulator | | | 4 | 3 | 4 | 3 | | | | 1 | 3 | |
| Run test 03 (see table 6-14) | | | | | | | | | | | | X |

If test 01 ends in fault code 36, run test 02 to further specify the probable failing assembly. Refer to table 6-8 for the termination code/probable failing assembly matrix.

Table 6-8. TEST 02 TERMINATION CODES FOLLOWING TEST 01 FAULT CODE 36

| TERMINATION CODE | 70 | 71 | 72 | 73 | 74 | 75 | 84 | 89 | 90 | 91 | 92 | OTHER CODES |
|---|---|---|---|---|---|---|---|---|---|---|---|---|
| OPERATOR ACTION | | | | | | | | | | | | |
| Illegal Op Sequence | A | | | | | | | | | | | |
| Ensure Tape is Thd'd | | A | | | | | | | | | | |
| Repeat Test | | B | | | | | | | | | | |
| FAILING ASSEMBLY | | | | | | | | | | | | |
| Servo-Control | | 1 | | 2 | | 2 | 2 | | | 3 | | 2 |
| Power Driver | | | | | | | | | | | | 3 |
| Compressor | | | 3 | 4 | 3 | 4 | | | | 2 | 2 | |
| Filter | | | 2 | | 2 | | | | | | 1 | |
| Supply Air Brg Sensor | | | | | 1 | 1 | | 1 | | | | |
| Take-Up Air Brg Sensor | | | 1 | 1 | | | | | 1 | | | |
| Take-Up Motor/Tach | | | | | | | 1 | | | | | 1 |
| Pressure Regulator | | | 4 | 3 | 4 | 3 | | | | 1 | 3 | |
| Formatter Read | | | | | | | | | | | | 4 |
| Formatter Write | | | | | | | | | | | | 5 |
| Write Driver | | | | | | | | | | | | 6 |
| Read/Write Head | | | | | | | | | | | | 7 |
| Read Amplifier | | | | | | | | | | | | 8 |
| Write Cable | | | | | | | | | | | | 9 |
| Run test 03 (see Table 6-17) | | | | | | | | | | | | X |

This page left blank intentionally.

Test 03 Follow-Up

If test 01 ends in fault code 03, run test 03 to further specify the probable failing assembly. Refer to table 6-9 for the termination code/probable failing assembly matrix.

Table 6-9. TEST 03 TERMINATION CODES FOLLOWING TEST 01 FAULT CODE 03

| TERMINATION CODE | 82 | 84 | 94 | 95 | 96 | 98 | 00 | OTHER CODES |
|---|---|---|---|---|---|---|---|---|
| OPERATOR ACTION | | | | | | | | |
| Ensure Tape is Not Threaded | | | A | | | | | |
| Repeat Test | | | | A | | | A | |
| FAILING ASSEMBLY | | | | | | | | |
| Read Amp | | | | | | | 3 | 6 |
| Power Driver | 1 | | | | | | | |
| Magnetic Head | | | | | | | 2 | 5 |
| Servo/Control | | 2 | | | 2 | 1 | 4 | 3 |
| Formatter Read | | | | | | | 5 | 1 |
| Formatter Write | | | | | | | 6 | 2 |
| Take-Up Motor/Tach | | 1 | | | 1 | 2 | | |
| Write Cable | | | | | | | 7 | 7 |
| Write Driver | | | | | | | 1 | 4 |

If test 01 ends in fault code 04 or 06, run test 03 to further specify the probable failing assembly. Refer to table 6-10 for the termination code/probable failing assembly matrix.

Table 6-10. TEST 03 TERMINATION CODES FOLLOWING TEST 01 FAULT CODE 04 or 06

| TERMINATION CODE | 82 | 84 | 94 | 95 | 96 | 98 | OTHER CODES |
|---|---|---|---|---|---|---|---|
| OPERATOR ACTION | | | | | | | |
| Ensure Tape is Not Threaded | | | A | | | | |
| Repeat Test | | | B | A | | | |
| FAILING ASSEMBLY | | | | | | | |
| Servo/Control | | 2 | | | 2 | 1 | 3 |
| Power Driver | 1 | | | | | | 1 |
| Read/Write Head | | | | | | | 5 |
| Take-Up Motor/Tach | | 1 | | | 1 | 2 | |
| Write Driver | | | | | | | 4 |
| Read Amplifier | | | | | | | 6 |
| Formatter Read | | | | | | | 1 |
| Formatter Write | | | | | | | 2 |
| Write Cable | | | | | | | 7 |

If test 01 ends in fault code 22, run test 03 after test 02 to further specify the probable failing assembly. Refer to table 6-11 for the termination code/probable failing assembly matrix.

Table 6-11. TEST 03 TERMINATION CODES FOLLOWING TEST 01 FAULT CODE 22

| TERMINATION CODE | 94 | 95 | 96 | 98 | OTHER CODES |
|---|---|---|---|---|---|
| OPERATOR ACTION | | | | | |
| Ensure Tape is Not Threaded | A | | | | |
| Repeat Test | | A | | | |
| FAILING ASSEMBLY | | | | | |
| Take-Up Motor/Tach | | | 1 | 1 | |
| Servo-Control | | | 2 | 2 | 1 |
| Power Driver | | | | | 2 |

If test 01 ends in fault code 25, run test 03 to further specify the probable failing assembly. Refer to table 6-12 for the termination code/probable failing assembly matrix.

Table 6-12. TEST 03 TERMINATION CODES FOLLOWING TEST 01 FAULT CODE 25

| TERMINATION CODE | 94 | 95 | 98 | OTHER CODES |
|---|---|---|---|---|
| OPERATOR ACTION | | | | |
| Ensure Tape is Not Threaded | A | | | |
| Repeat Test | B | A | | |
| FAILING ASSEMBLY | | | | |
| Servo-Control | 1 | 1 | 2 | 2 |
| Power Driver | | | | 3 |
| Take-Up Motor/Tach | | | 1 | |
| Supply Hub | | | | 1 |

If test 01 ends in fault code 26, run test 03 subfault code 09, to further specify the probable failing assembly. Refer to table 6-13 for the termination code/probable failing assembly matrix.

Table 6-13. TEST 03 TERMINATION CODES FOLLOWING TEST 01 FAULT CODE 26

| TERMINATION CODE | 82 | 84 | 94 | 95 | 96 | 00 | OTHER CODES |
|---|---|---|---|---|---|---|---|
| OPERATOR ACTION | | | | | | | |
| Ensure Tape is Not Threaded | | | A | | | | |
| Repeat Test | | | | A | | | |
| FAILING ASSEMBLY | | | | | | | |
| Take-Up Motor/Tach | 2 | 1 | | | 1 | 3 | 3 |
| Power Driver | 1 | | | | 2 | 1 | |
| Servo/Control | 3 | 2 | | | 4 | 2 | 1 |
| Door Interlock Switch | | | | | 3 | 4 | |
| Supply Motor/Tach | | | | | | 5 | 2 |
| Run Test 02 | | | | | | X | |

If test 01 ends in fault code 30 or 31, run test 03 after test 02 to further specify the probable failing assembly. Refer to table 6-14 for the termination code/probable failing assembly matrix.

Table 6-14. TEST 03 TERMINATION CODES FOLLOWING TEST 01 FAULT CODE 30 or 31

| TERMINATION CODE | 82 | 84 | 94 | 95 | 96 | 98 | 00 | OTHER CODES |
|---|---|---|---|---|---|---|---|---|
| OPERATOR ACTION | | | | | | | | |
| Ensure Tape is Not Threaded | | | A | | | | | |
| Repeat Test | | | B | A | | | | |
| FAILING ASSEMBLY | | | | | | | | |
| Servo/Control | 2 | 2 | 1 | 1 | 2 | | 3 | 3 |
| Power Driver | 1 | | | | | | 1 | 1 |
| Take-Up Motor/Tach | | 1 | | | 1 | 1 | 2 | 2 |

If test 01 ends in fault code 32, run test 03 to further specify the probable failing assembly. Refer to table 6-15 for the termination code/probable failing assembly matrix.

Table 6-15. TEST 03 TERMINATION CODES FOLLOWING TEST 01 FAULT CODE 32

| TERMINATION CODE | 82 | 84 | 94 | 95 | 96 | 98 | OTHER CODES |
|---|---|---|---|---|---|---|---|
| OPERATOR ACTION | | | | | | | |
| Ensure Tape is Not Threaded | | | A | | | | |
| Repeat Test | | | B | A | | | |
| FAILING ASSEMBLY | | | | | | | |
| Servo-Control | | | 1 | 1 | 2 | 2 | 1 |
| Power Driver | 1 | | | | | | 2 |
| Take-Up Motor/Tach | | 1 | | | 1 | 1 | 3 |
| Compressor | | | | | | | 5 |
| Filter | | | | | | | 4 |
| Pressure Regulator | | | | | | | 6 |

If test 01 ends in fault code 33 or 35, run test 03 to further specify the probable failing assembly. Refer to table 6-16 for the termination code/probable failing assembly matrix.

Table 6-16. TEST 03 TERMINATION CODES FOLLOWING TEST 01 FAULT CODE 33 or 35

| TERMINATION CODE | 94 | 95 | 98 | OTHER CODES |
|---|---|---|---|---|
| OPERATOR ACTION | | | | |
| Ensure Tape is Not Threaded | A | | | |
| Repeat Test | B | A | | |
| FAILING ASSEMBLY | | | | |
| Servo-Control | 1 | 1 | | 1 |
| Take-Up Motor/Tach | | | 1 | |

If test 01 ends in fault code 36, run test 03 after test 02 to further specify the probable failing assembly. Refer to table 6-17 for the termination code/probable failing assembly matrix.

Table 6-17. TEST 03 TERMINATION CODES FOLLOWING TEST 01 FAULT CODE 36

| TERMINATION CODE | 82 | 84 | 94 | 95 | 96 | 98 | OTHER CODES |
|---|---|---|---|---|---|---|---|
| OPERATOR ACTION | | | | | | | |
| Ensure Tape is Not Threaded | | | A | | | | |
| Repeat Test | | | B | A | | | |
| FAILING ASSEMBLY | | | | | | | |
| Servo-Control | | 2 | | | 2 | 1 | 3 |
| Take-Up Motor/Tach | | 1 | | | 1 | 2 | |
| Power Driver | 1 | | | | | | |
| Formatter Read | | | | | | | 1 |
| Formatter Write | | | | | | | 2 |
| Write Driver | | | | | | | 4 |
| Read/Write Head | | | | | | | 5 |
| Read Amplifier | | | | | | | 6 |
| Write Cable | | | | | | | 7 |

If test 01 ends in fault code 48, run test 03 to further specify the probable failing assembly. Refer to table 6-18 for the termination code/probable failing assembly matrix.

Table 6-18. TEST 03 TERMINATION CODES FOLLOWING TEST 01 FAULT CODE 48

| FAULT CODE | 94 | 95 | 96 | 98 | OTHER CODES |
|---|---|---|---|---|---|
| OPERATOR ACTION | | | | | |
| Ensure Tape is Not Threaded | A | | | | |
| Repeat Test | B | A | | | |
| FAILING ASSEMBLY | | | | | |
| Servo-Control | 1 | 1 | 2 | | 1 |
| Take-Up Motor/Tach | | | 1 | 1 | |
| Supply Motor/Tach | | | | | 2 |
| EOT/BOT Assy | 2 | | | | |

If test 01 ends in fault code 52, run test 03 to further specify the probable failing assembly. Refer to table 6-19 for the termination code/probable failing assembly matrix.

Table 6-19. TEST 03 TERMINATION CODES FOLLOWING TEST 01 FAULT CODE 52

| TERMINATION CODE | 94 | 95 | 96 | 98 | 00 | OTHER CODES |
|---|---|---|---|---|---|---|
| OPERATOR ACTION | | | | | | |
| Ensure Tape is Not Threaded | A | | | | | |
| Repeat Test | B | A | | | A | |
| FAILING ASSEMBLY | | | | | | |
| Servo-Control | 1 | 1 | 2 | | | 1 |
| Take-Up Motor/Tach | | | 1 | 1 | | |
| Supply Motor/Tach | | | | | | 2 |
| Supply Hub | | | | | | 3 |

## ON-SITE PROCEDURES

Prior to initiating any diagnostic test, make a thorough visual inspection of the STU. Inspection of the head recording surface, cleaner blades, write enable reflective ring, hub assemblies, and proper seating of electrical connectors is always the first step in an organized troubleshooting procedure.

After you have made a visual inspection, perform a functional check of the STU as follows (see figure 6-1):

1. Perform SAM 1001 if STU will not power on properly. This procedure checks out the functional operation of the transport, including ancillary sensors, which the microprocessor cannot fault-detect without manual operation and visual feedback.

2. Run operator diagnostic test 01 to verify the fault.

3. Refer to specific SAM fault code.

4. Perform any corrective action as directed by the SAM.

5. Verify operation of the transport by again performing operator diagnostic test 01 or other verification tests, as directed by the SAM.

### Diagnostic Tests

The maintenance philosophy for trouble analysis of the STU is to minimize the time required to restore the STU to an on-line status, after a reported fault condition occurs. This is accomplished by providing two types of diagnostics:

1. An operator test which is initiated before reporting the fault condition to the CE.

2. Customer engineer tests to be performed when you report to the site for corrective action.

### Operator Diagnostics

The operator diagnostic is a functional test which directs operator actions after a fault code appears. The operator test, procedure, and a fault code/corrective action table are contained in Volume I, 49762900. The fault code may indicate any one or more of the following types of fault conditions:

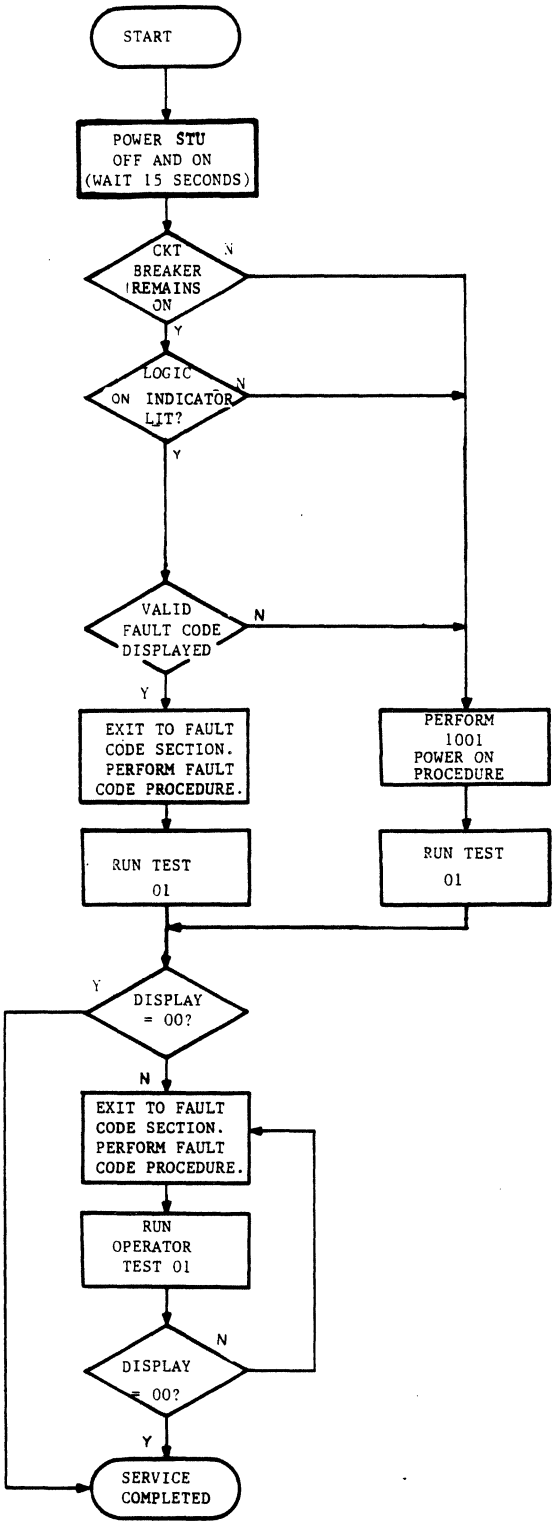


Figure 6-1. Flowchart of On-Site Trouble Analysis

- Environment or Media Problems

  This type of problem requires that the operator clean the tape path area and/or use another known good quality tape.

- Operator Error Problem

  This type of problem is caused by conditions such as door open, write enable ring not present, or tape threaded incorrectly.

- Transport Circuit Problems

  These are fault conditions which require service by a customer engineer.

It is your responsibility to ensure that the operator performs test 01, and to determine from the operator the fault code which appears after running the operator diagnostic.

Because the operator diagnostic is an integral part of the trouble analysis procedures, subsequent paragraphs contain the procedure to initiate this diagnostic. The only difference between the procedure contained in the Operation Section of Volume I, and the following procedure, is an expanded feature to display a sub-fault code for maintenance purposes.

Diagnostic Test Procedure

The operator diagnostic consists of one test which runs for approximately 13 minutes, when a 2400 foot tape is used. Tests 02 and 03 are available, but should be performed by the operator, only at your request. Faults encountered during the test terminate the diagnostics and display a numerical code on the display panel. Any fault code should be logged by the operator and reported to you, if operator corrective actions do not resolve the problem. The operator diagnostic is initiated as follows:

- Transport Status

  1. Transport powered on (LOGIC ON indicator lit).

  2. Tape threaded through tape path and onto take-up reel, but not loaded (untensioned).

- Test Procedure

  1. Press TEST switch.

     a. DIAGNOSTIC indicator lights.

     b. Display panel indicates 01.

  2. Press EXECUTE switch.

     a. Test starts with display panel incrementing from 00, 11, 22 thru 99. Verify that all segments of the numerical display are functioning.

     b. Concurrent with step a. above, the following indicators light: FILE PROTECT, LOGIC ON, ON-LINE, RESET and DIAGNOSTICS.

     c. Test continues with various motion and read/write exercises for approximately 13 minutes.

The transport performs a REWIND/UNLOAD operation and 00 is indicated on the display panel if the test runs to completion. If the test is unsuccessful, the test terminates and a fault code appears on the display panel. If the problem cannot be resolved through operator actions, as indicated in table 6-3, the fault code is referenced directly to the corresponding SAM table for corrective action.

When the SAM tables are referenced for corrective action, a sub-fault code interrogation may be required. With the fault code still indicated on the display panel, press and hold the CE switch. This action will cause the sub-fault code to appear on the display.

If a SAM action item indicates test 02 or 03 to be performed, select test as follows:

NOTE

Tests 02 and 03 should not be used unless test 01 directs their use. Test 02 and test 03 may fail if run without first running test 01, and fault code 70 or 71 will appear.

1. Press RESET switch (resets fault code from test 01, if still displayed).
2. Press TEST switch (01 is indicated on display).
3. Press STEP switch one time (numerical display steps from 01 to 02). If test 03 is required, press STEP a second time to increment display from 02 to 03.
4. Press EXECUTE switch (test starts).

Tests 02 and 03 are very short tension and servo tests. Display 00 is indicated if test is successful. If test is not successful, refer the fault code to the original SAM table.

Customer Engineer Diagnostics

Perform the customer engineer diagnostics in conjunction with the requirements of the structured analysis method (SAM) Tables. When reporting to the site, obtain as much information from the operator and operating system as you can. Fault codes, the frequency at which they occur and, if possible, the operation in progress at that time, are all things which should be considered prior to execution of the diagnostics. If the fault is intermittent, the information received from the operator and operating system may be instrumental in directing you to the appropriate test to duplicate the condition under which the fault occurs.

If the fault condition is a hard error, or one which occurs frequently, start the troubleshooting procedure by executing operator diagnostic test 01. This test is a lead-in to all fault codes and subsequent SAM tables.

Initiate customer engineer tests as follows:

- o Transport Status

  Status requirements of the transport are listed in the individual SAM troubleshooting tables.

- o Test Procedure

  1. While pressing CE switch, press TEST switch.

     a. DIAGNOSTICS indicator lights.

     b. Display panel indicates 00.

  2. Press STEP switch.

     a. Display number increments each time STEP is pressed, or increments automatically if STEP is held pressed.

     b. To facilitate test number selection, use the following procedure. Example: Test 39 selection required.

        - Press STEP switch until 03 appears on display panel.

        - Press TEST switch and the 3 digit transfers to the left.

        - Display now indicates 30.

        - Press STEP switch again until display increments from 30 to 39.

     c. If test options (see test description subsection) are desired, press and hold CE switch, then press EXEC while CE is held pressed. Display will indicate 00. STEP switch is then pressed to select the desired option.

  3. Press EXECUTE switch.

     a. Test is initiated.

If test runs to completion, the display panel indicates 00. If test fails, the display panel indicates the fault code.

## Customer Engineer Special Load/Unload Procedures

While performing specific fault code procedures, you may be directed to perform a TEST LOAD or an UNTENSIONED UNLOAD procedure. A description of these special procedures follows.

- TEST LOAD

  Follow this procedure if a reel of tape is suspected of not being wrapped properly and a tape re-wrap is necessary.

  1. Press TEST switch. DIAGNOSTIC indicator lights and display indicates 01.

  2. Press LOAD switch. Forward tape motion is initiated to EOT. The take-up reel motor moves tape while the supply reel motor is completely untensioned. When EOT is detected, a normal rewind function is initiated (with tape tension) to BOT.

- UNTENSIONED UNLOAD

  Use this procedure to unwrap tape from the take-up reel onto the supply reel following a servo fault. The velocity servo (take-up reel motor) is completely untensioned while the supply reel moves tape in the reverse direction. Press UNLOAD switch while tape is untensioned (not loaded).

## Sub-Fault Codes

The SAM tables may direct you to display the sub-fault code associated with the primary fault code. The sub-fault code is displayed by pressing the CE switch after the primary fault code appears on the digital indicators. The sub-fault code is displayed as long as the CE switch is held pressed.

## STRUCTURED ANALYSIS METHOD (SAM) TABLES

After a fault code appears on the display panel, refer the fault code number directly to the corresponding number of the SAM which are listed numerically on subsequent pages. The basic SAM format (figure 6-2) uses YES (Y) or NO (N) responses to sequential conditions to lead the customer engineer to appropriate corrective action.

When a fault can be caused by any one of several factors, the separate actions to correct each of these factors are numbered according to priority level with the action, having the highest probability of success, being listed as number 1. If several actions have the same probability of correcting the fault, the one that is easiest to perform (takes the least time) is listed as the first action.

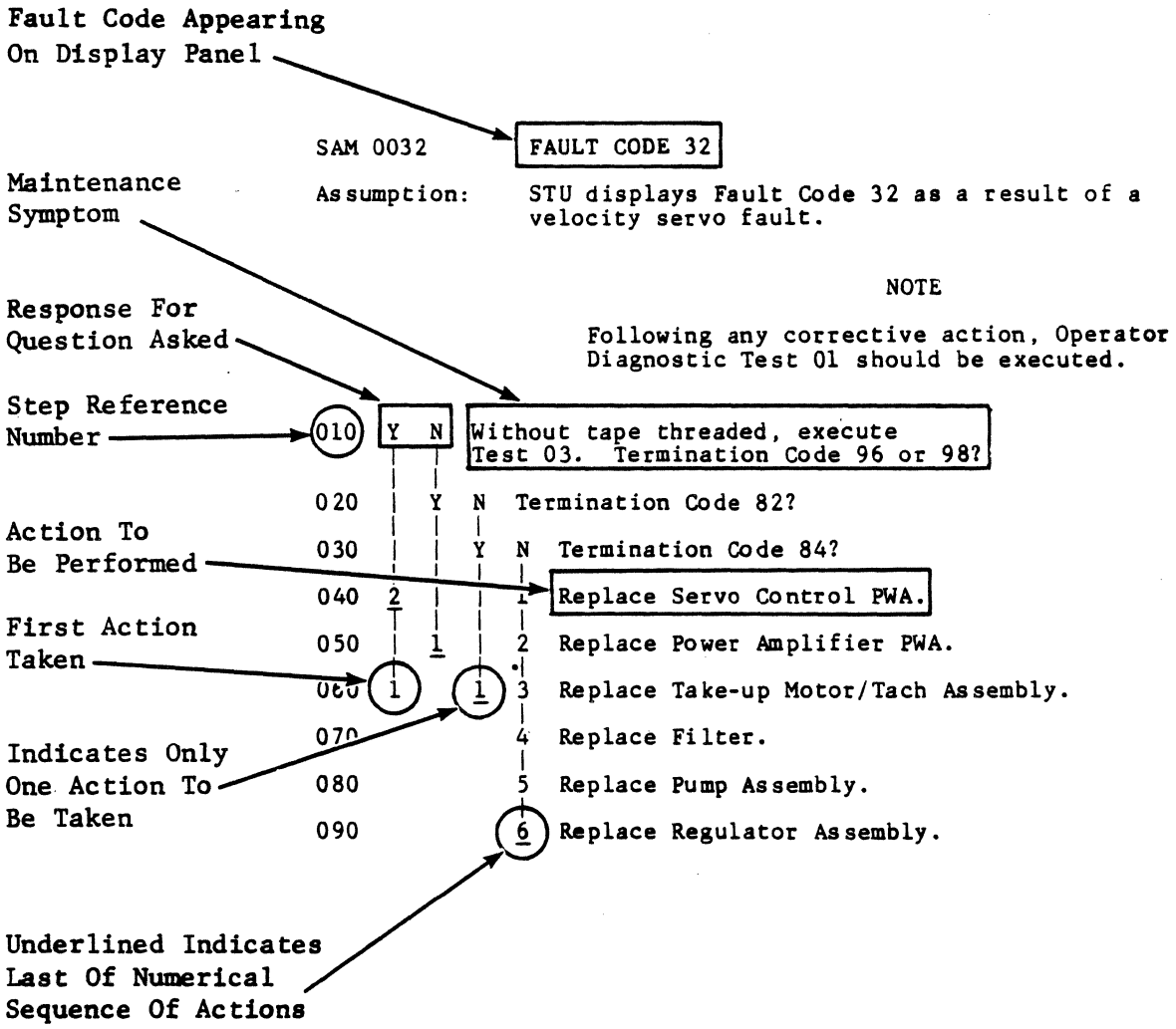


Figure 6-2. Example of Structured Analysis Method (SAM) Table

SUB-FAULT CODE INTREPRETATION

The sub-fault code is displayed by pressing the CE switch after the primary fault code is indicated. Sub-fault codes are listed after the associated fault code.

Interpretation of the sub-fault numerical display is as follows:

1. Example 1 - Fault Code 25, Sub-Fault Code 64 (Figure 6-3)

   a. 40 - Take Up sensor saw fault code first.
   b. 20 - Fault code occurred on up ramp.
   c. 04 - Fault occurred in reverse direction.
   d. 00 - Fault occurred with low speed demanded.
   e. 00 - Fault occurred in start/stop mode.

   64

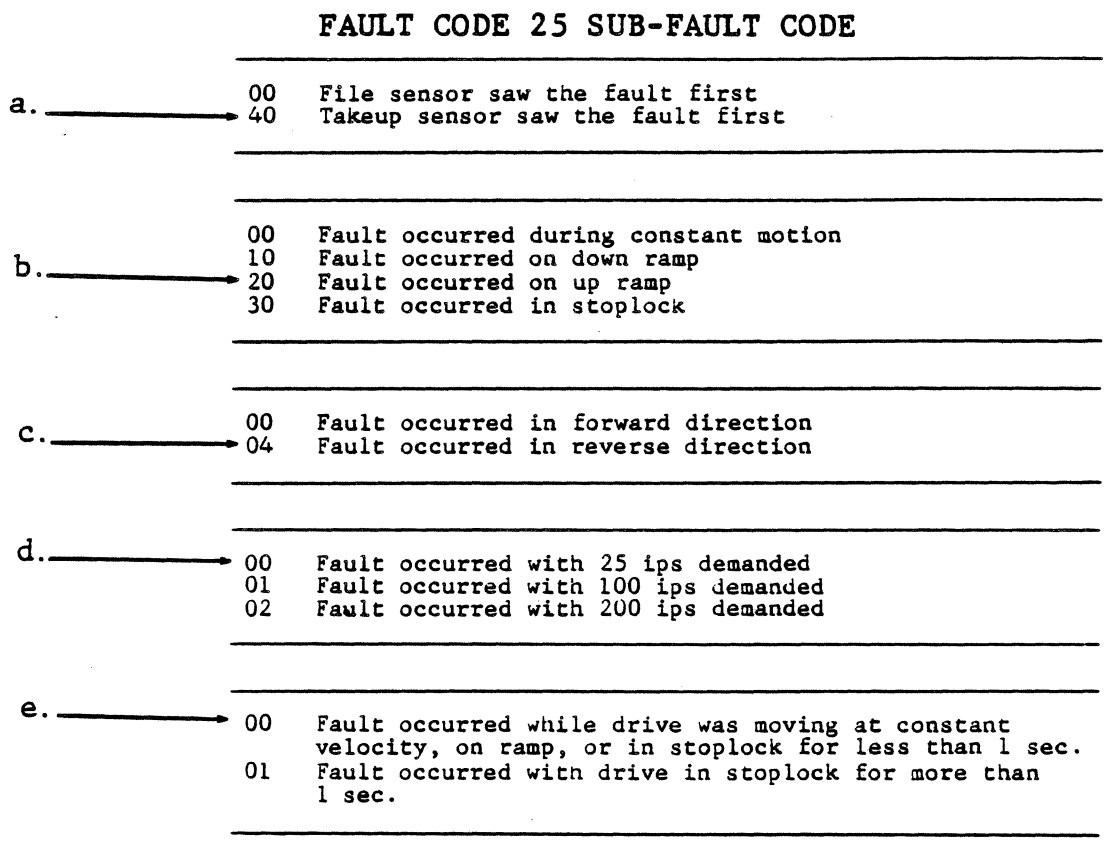


Figure 6-3. Sub-Fault Code Interpretation - Example 1

2. Example 2 - Fault Code 25, Sub-Fault Code 19 (Figure 6-4)

a. 00 - File sensor saw fault first.
b. 10 - Fault occurred on down ramp.
c. 00 - Fault occurred in forward direction.
d. 01 - Fault occurred with low speed demanded.
e. 08 - Fault occurred in streaming mode.

19

FAULT CODE 25 SUB-FAULT CODE

| | | |
|---|---|---|
| a. → | 00 | File sensor saw the fault first |
| | 40 | Takeup sensor saw the fault first |
| b. → | 00 | Fault occurred during constant motion |
| | 10 | Fault occurred on down ramp |
| | 20 | Fault occurred on up ramp |
| | 30 | Fault occurred in stoplock |
| c. → | 00 | Fault occurred in forward direction |
| | 04 | Fault occurred in reverse direction |
| d. → | 00 | Fault occurred with 25 ips demanded |
| | 01 | Fault occurred with 100 ips demanded |
| | 02 | Fault occurred with 200 ips demanded |
| e. → | 00 | Fault occurred with pneumatic pump enabled. |
| | 08 | Fault occurred with pneumatic pump shut down. |

Figure 6-4. Sub-Fault Code Interpretation - Example 2

## TROUBLESHOOTING DIAGRAMS

NOTE

Functional Troubleshooting Procedure 1001 through 1003 check out the functional operation of the STU, including ancilliary sensors, which the STU microprocessors cannot fault detect without manual operation and visual feedback.

| SAM CHECKOUT | DESCRIPTION |
|---|---|
| 1001 | Power-on 1 Checkout |
| 1002 | Power-on 2 Checkout |
| 1003 | Power-on 3 Checkout |

| SAM FAULT CODE | DESCRIPTION |
|---|---|
| 01 | Read envelope fault |
| 02 | Read amplitude tolerance fault |
| 03 | ID fault |
| 04 | Low speed write errors |
| 05 | Low speed read errors |
| 06 | High speed write errors |
| 07 | High speed read errors |
| 08 | Noise in IBG |
| 09 | Hardware failure |
| 10 | Operator door open |
| 11 | Absence of tape |
| 12 | Load fault |
| 13 | Tape threaded incorrectly |
| 14 | BOT location fault |
| 15 | Load/Unload aborted by operator |
| 16 | Diagnostic tape is write protected |
| 17 | Ran off end of tape |
| 18 | Tape already loaded |
| 19 | Reserved for future use |
| 20 | File tension sensor fault |
| 21 | Take-up tension sensor fault |
| 22 | Unable to tension tape |
| 23 | Unable to re-establish tension |
| 24 | High tension fault |
| 25 | Low tension fault |
| 26 | Servo fault |
| 27 | No coarse tachs |
| 28 | Reserved for future use |
| 29 | Absence of tape |

| SAM FAULT CODE | DESCRIPTION |
|---|---|
| 30 | Up ramp fault |
| 31 | Down ramp fault |
| 32 | Stoplock over-run |
| 33 | Tape positioning fault |
| 34 | BOT positioning fault |
| 35 | Positioning fault |
| 36 | Speed fault |
| 37 | Compressor power-up |
| 38 | Illegal load sequence |
| 39 | |
| 40 | |
| 41 | Stack overflow fault |
| 42 | |
| 43 | |
| 44 | Unrecoverable write error |
| 45 | |
| 46 | |
| 47 | Velocity correction fault |
| 48 | Unload fault |
| 49 | |
| 50 | Irrecoverable device health check fault |
| 51 | Recoverable device health check fault |
| 52 | Speed calculation fault |
| 53 | Arithmetic error |
| 54 | Erase/Write current fault |
| 55 | Unload/Rewind Timeout fault |
| 56 | Processor communication fault |
| 57 | |
| 58 | |
| 59 | Interface Adapter Fault (SCSI) Interface Only |
| 60 | Irrecoverable operator panel fault |
| 61 | Recoverable operator panel fault |
| 62 | Formatter write board health check |
| 63 | Formatter read/write interface health check |
| 64 | Formatter read PWA health check fault in data loopback |
| 65 | Formatter read PWA health check fault |
| 66 | Formatter/Adapter interface health check |
| 67 | Interface PWA health check fault |
| 68 | Interface PWA checksum fault |
| 69 | Remote diagnostics fault |

POWER-ON CHECKOUT 1001

This power-on/installation SAM is for the isolation of ac power faults.

Assumption: The STU ac circuit breaker is turned off and the STU is plugged into a live ac supply of the correct voltage.

NOTE

Following any corrective action, reconnect any assemblies that may have been disconnected and restart this SAM with circuit breaker turned off.

| | | | | | | |
|---|---|---|---|---|---|---|
| 010 | Y | N | | | | Turn circuit breaker ON. Does circuit breaker remain on? |
| 020 | | Y | N | | | Disconnect cooling fan cable from power supply. Turn circuit breaker ON. Does circuit breaker remain on? |
| 030 | | | Y | N | | Reconnect cooling fan cable to power supply. Disconnect pump cable from power supply. Turn circuit breaker ON. Does circuit breaker remain on? |
| 040 | | | | 1 | | Replace power supply assembly. |
| 050 | | | 1 | | | Replace pump assembly. |
| 060 | | 1 | | | | Replace cooling fan assembly. |
| 070 | Y | N | | | | Is the LOGIC ON indicator on operator panel lit? |
| 080 | | Y | N | | | Is the LOGIC OFF indicator on operator panel lit? |
| 090 | | | Y | N | | Is the cooling fan operating? |
| 100 | | | | 1 | | Ensure that ac supply cable is plugged into power supply cable. |
| 110 | | | | 2 | | Ensure that ac supplied to the STU is live and the correct voltage for the unit. |
| | 2A | 2B | 2C | 2D | | |

POWER-ON CHECKOUT 1001

| | A | B | C | D | |
|---|---|---|---|---|---|
| | 1 | 1 | 1 | 1 | |
| 120 | | | | 3 | Replace power supply assembly. |
| 130 | | | 1 | | Ensure operator panel cable is plugged into servo control PWA and power supply. |
| 140 | | | 2 | | Replace power supply assembly. |
| 150 | | | 3 | | Replace operator panel assembly. |
| 160 | | Y | N | | Is the cooling fan operating? |
| 170 | | | 1 | | Replace power supply assembly. |
| 180 | | 1 | | | Go to SAM 1002. |
| 190 | Y | N | | | Is the cooling fan operating? |
| 200 | | 1 | | | Replace cooling fan assembly. |
| 210 | | 2 | | | Replace power supply assembly. |
| 220 | Y | N | | | Is the LOGIC OFF indicator lit? |
| 230 | | Y | N | | Is the 2-digit display blank and FILE PROT indicator lit and RESET, ON-LINE, and DIAGNOSTICS indicators all unlit? |
| 240 | | | Y | N | Are RESET, ON-LINE, and DIAGNOSTICS indicators all lit? |
| 250 | | | | Y N | Is the display blank? |
| 260 | | | | Y N | Wait for 15 seconds. Is RESET indicator unlit? |
| 270 | | | | Y N | Is valid fault code displayed? |
| 280 | | | | 1 1 | Replace servo-control PWA. (Refer to set-up tests in servo-control PWA removal/replacement procedure.) |
| | 3 | 3 | 3 | 3 3 | |
| | A | B | C | D E | |

POWER-ON CHECKOUT 1001

| | 2A | 2B | 2C | 2D | | 2E | |
|---|---|---|---|---|---|---|---|
| 290 | | | | | | 1 | Go to SAM for displayed fault code. |
| 300 | | | | Y | N | | Is FILE PROTECT indicator lit? |
| 310 | 1 | | | | 1 | | Replace operator panel assembly. |
| 320 | | | 1 | 1 | 2 | | Replace servo-control PWA. (Refer to set-up tests in servo-control PWA removal/ replacement procedure.) |
| 330 | 2 | | 2 | | | | Replace power supply assembly |
| 340 | | 1 | | | | | Go to SAM 1003. |

NOTE

If the power-on, auto load option is enabled and tape is not threaded, an error code may occur.

POWER-ON CHECKOUT 1002

This power-on SAM is for the isolation of dc power faults.

Assumption: The STU ac circuit breaker is turned on, the OFF indicator is lit and the cooling fan is operating.

NOTE

Following any corrective action, reconnect any assemblies that may have been disconnected and restart this SAM.

| | | | |
|---|---|---|---|
| 010 | Y | N | Disconnect dc cable harnesses from the underside of power supply. Press LOGIC ON switch of operator panel. Does LOGIC ON indicator light and stay lit? |
| 020 | | 1 | Replace power supply assembly. |
| 030 | Y | N | Reconnect dc cable harnesses to power supply. Disconnect dc supply cable from power driver PWA. Press LOGIC ON switch. Does LOGIC ON indicator light and stay lit? |
| 040 | Y | N | Reconnect dc supply cable to power driver PWA. Disconnect dc supply cable from write driver PWA. Press LOGIC ON switch. Does LOGIC ON indicator light and stay lit? |
| 050 | Y | N | Reconnect dc supply cable to write driver PWA. Disconnect dc supply cable from servo-control PWA and read amplifier PWA. Press LOGIC ON switch. Does LOGIC ON indicator light and stay lit? |
| 060 | Y | N | Reconnect dc supply cable to servo-control PWA and read amplifier PWA. Disconnect dc supply cable from formatter write PWA and formatter read PWA. Press LOGIC ON switch. Does LOGIC ON indicator light and stay lit? |
| 070 | Y | N | Reconnect dc supply cable to formatter read PWA. Disconnect dc supply cable from interface PWA. Press LOGIC ON switch. Does LOGIC ON indicator light and stay lit. |
| | 2A | 2B | 2C 2D 2E 2F |

POWER-ON CHECKOUT 1002

| | A | B | C | D | E | F | |
|---|---|---|---|---|---|---|---|
| | 1 | 1 | 1 | 1 | 1 | 1 | |
| 080 | | | | | | 1 | Replace power supply assembly. |
| 090 | | | | | 2 | 2 | Replace operator panel assembly. |
| 100 | | | | | 1 | | Replace interface PWA. |
| 110 | | | | Y | N | | Remove formatter write PWA and reconnect dc supply cable to formatter read PWA. Press LOGIC ON switch. Does LOGIC ON indicator light and stay lit? |
| 120 | | | | | 1 | | Replace formatter read PWA. |
| 130 | | | | 2 | 2 | | Replace power supply assembly. |
| 140 | | | | 1 | | | Replace formatter write PWA. |
| 150 | | | Y | N | | | Remove servo-control PWA and reconnect dc supply cable to read amplifier PWA. Press LOGIC ON switch. Does LOGIC ON indicator light and stay lit? |
| 160 | | | | 1 | | | Replace read amplifier PWA (Run set-up test 31). |
| 170 | 2 | 2 | 2 | 2 | | | Replace power supply assembly. |
| 180 | | | 1 | | | | Replace servo-control PWA. (Refer to set-up tests in servo-control PWA removal/replacement procedure) |
| 190 | | 1 | | | | | Replace write driver PWA (Run set-up tests 64, 31). |
| 200 | 1 | | | | | | Replace power driver PWA. |

POWER-ON CHECKOUT 1003

This SAM is for the detection/isolation of operational faults.

Assumption: The STU is powered on with the LOGIC OFF indicator unlit, the LOGIC ON indicator lit, the FILE PROTECT indicator lit, and the unit unloaded.

NOTE

Following any corrective action, this SAM should be restarted.

| | | | |
|---|---|---|---|
| 010 | Y | N | Thread a write enabled tape and close operator door. Press TEST switch. Does DIAGNOSTICS indicator light? |
| | | 1 | Replace operator panel assembly. |
| | | 2 | Replace servo-control PWA. (Refer to set-up tests in servo-control PWA removal/replacement procedure). |
| 040 | Y | N | Is 01 displayed? |
| | | 1 | Replace operator panel assembly. |
| | | 2 | Replace servo-control PWA. (Refer to set-up tests in servo-control PWA removal/replacement procedure). |
| 070 | Y | N | Press EXECUTE switch and observe indicators and display of operator panel. Does display sequence from 00 to 11 to 22 to 99 without any missing segments? And while display is sequencing, are ON-LINE, HI DENSITY, and RESET indicators lit? |
| | | 1 | Replace operator panel assembly. |
| | | 2 | Replace servo-control PWA. (Refer to set-up tests in servo-control PWA removal/replacement procedure). |
| 100 | Y | N | Does operator diagnostic test 01 terminate displaying 00? |
| | | 1 | Go to the SAM for the displayed fault code. |
| 120 | Y | N | Is the BOT indicator unlit? |
| | 2A | 2B | |

POWER-ON CHECKOUT 1003

| | A | B | |
|---|---|---|---|
| | 1 | 1 | |
| 130 | | 1 | Replace servo-control PWA. (Refer to set-up tests in servo-control PWA removal/replacement procedure.) |
| 140 | | 2 | Replace operator panel assembly. |
| 150 | Y | N | Press the RESET switch. Is the display blank? |
| 160 | | 1 | Replace operator panel assembly. |
| 170 | | 2 | Replace servo-control PWA. (Refer to set-up tests in servo-control PWA removal/replacement procedure.) |
| 180 | Y | N | Thread tape and close operator door. Press LOAD switch. Does STU load tape? |
| 190 | | Y | N Fault code displayed? |
| 200 | | | 1 Replace operator panel assembly. |
| 210 | | | 2 Replace servo-control PWA. (Refer to set-up tests in servo-control PWA removal/replacement procedure) |
| 220 | | 1 | Go to the SAM for displayed fault code. |
| 230 | Y | N | Is BOT indicator lit? |
| 240 | | 1 | Replace operator panel assembly. |
| 250 | | 2 | Replace servo-control PWA. (Refer to set-up tests in servo-control PWA removal/replacement procedure.) |
| 260 | Y | N | Is FILE PROTECT indicator unlit? |
| 270 | | 1 | Replace operator panel assembly |
| 280 | | 2 | Replace servo-control PWA. (Refer to set-up tests in servo-control PWA removal/replacement procedure.) |
| 290 | Y | N | Press ON-LINE switch. Does ON-LINE indicator light? |
| | 3 | 3 | |
| | A | B | |

POWER-ON CHECKOUT 1003

| | A | B | |
|---|---|---|---|
| | 2 | 2 | |
| 300 | | 1 | Replace operator panel assembly. |
| 310 | | 2 | Replace servo-control PWA. (Refer to set-up tests in servo-control PWA removal/replacement procedure.) |
| 320 | Y | N | Press RESET switch followed by UNLOAD switch. Does STU unload tape? |
| 330 | | Y | N Fault code displayed? |
| 340 | | | 1 Replace operator panel assembly. |
| 350 | | | 2 Replace servo-control PWA. (Refer to set-up tests in servo-control PWA removal/replacement procedure.) |
| 360 | | 1 | Go to the SAM for the displayed fault code. |
| 370 | Y | N | While pressing CE switch, press TEST switch. Is 00 displayed? |
| 380 | | 1 | Replace operator panel assembly. |
| 390 | | 2 | Replace servo-control PWA. (Refer to set-up tests in servo-control PWA removal/replacement procedure.) |
| 400 | Y | N | Press STEP switch. Is 01 displayed? |
| 410 | | 1 | Replace operator panel assembly. |
| 420 | | 2 | Replace servo-control PWA. (Refer to set-up tests in servo-control PWA removal/replacement procedure.) |
| 430 | Y | N | Press RESET switch. Remove write enable ring from reel and rethread tape. With operator door open, press LOAD switch. Is fault code 10 displayed? |
| 440 | | 1 | Replace door switch assembly. |
| 450 | | 2 | Replace servo-control PWA. (Refer to set-up tests in servo-control PWA removal/replacement procedure.) |
| | 4 | | |
| | A | | |

POWER-ON CHECKOUT 1003

| | | | |
|---|---|---|---|
| | 3 | | |
| | A | | |
| 460 | Y | N | Press RESET switch and close operator door. Press LOAD switch. Does the STU load tape successfully? |
| 470 | | 1 | Go to the SAM for the displayed fault. |
| 480 | Y | N | Is FILE PROTECT indicator lit? |
| 490 | | 1 | Replace file protect sensor assembly. |
| 500 | | 2 | Replace servo-control PWA. (Refer to set-up tests in servo-control PWA removal/replacement procedure.) |
| 510 | | 3 | Replace supply hub assembly. |
| 520 | 1 | | Unload tape; the SAM is completed without finding any faults. |

NOTE

Use SAM 1001 thru SAM 1003 to check out the functional operation of the STU, including ancilliary sensors, which the STU microprocessors cannot fault detect without manual operation and visual feedback.

FAULT CODE 01 - READ ENVELOPE

Assumption: STU displays fault code 01 as a result of failing to detect a read signal during a read amplitude checking diagnostic test.

The most probable cause of this fault is a dirty read-write head. Another possible cause is damaged tape.

NOTE

Following any corrective action, execute operator diagnostic test 01.

| | | | |
|---|---|---|---|
| 010 | 1 | | Clean read-write head, tape cleaner, hub pads and air bearings. |
| 020 | 2 | | Change tape to a known good write-enabled tape. |
| 030 | 3 | | Ensure that cables between read-write head and read amplifier and write driver PWAs are correctly connected. |
| 040 | Y | N | Execute CE test 58. Termination code 00? |
| 050 | | 1 | Replace formatter write PWA. |
| 060 | | 2 | Replace servo-control PWA. (Refer to set-up tests in servo-control PWA removal/replacement procedure.) |
| 070 | Y | N | Execute CE test 59. Termination code 00? |
| 080 | 1 | 3 | Replace read-write head. (Run set up tests 64, 31.) |
| 090 | 2 | 1 | Replace write driver PWA (Run set-up tests 64, 31). |
| 100 | 3 | 2 | Replace read amplifier PWA (Run set-up test 31). |
| 110 | 4 | 4 | Replace servo-control PWA. (Refer to set-up tests in servo-control PWA removal/replacement procedure.) |
| 120 | | 5 | Replace write cable. |

FAULT CODE 01

SUB-FAULT CODES, FAULT CODE 01

| | |
|---|---|
| 00 | Envelope not detected during read amplitude check (EGC test) |

FAULT CODE 02 - READ AMPLITUDE TOLERANCE

Assumption: STU displays fault code 02 as a result of detecting a read amplitude out of range during a read amplitude checking diagnostic test.

The most probable cause of this fault is a dirty read-write head. Another possible cause is damaged tape.

NOTE

Following any corrective action, execute operator diagnostic test 01.

| | | | |
|---|---|---|---|
| 010 | 1 | | Clean read-write head, tape cleaner, hub pads and air bearings. |
| 020 | 2 | | Change tape to a known good write-enabled tape. |
| 030 | 3 | | Ensure that cables between read-write head and read amplifier and write driver PWAs are correctly connected. |
| 040 | Y | N | Execute CE test 59. Termination code 00? |
| 050 | 1 | | Replace read/write head. (Run set-up tests 64, 31.) |
| 060 | 2 | 1 | Replace write driver PWA (Run set-up tests 64, 31). |
| 070 | 3 | 2 | Replace read amplifier PWA (Run set-up test 31). |
| 080 | 4 | 4 | Replace servo-control PWA. (Refer to set-up tests in servo-control PWA removal/replacement procedure.) |
| 090 | 5 | 5 | Replace formatter write PWA. |
| 100 | | 3 | Replace read-write head. (Run set-up tests 64, 31.) |
| 110 | | 6 | Replace write cable. |

FAULT CODE 02

SUB-FAULT CODES, FAULT CODE 02

| | |
|---|---|
| 00 | Read amplitude outside range 1.5 volts ± 0.8 volts (i.e. difference between EGC gain and gain in backup memory would cause an amplitude difference greater than 0.8 volts) |

FAULT CODE 03 - ID FAULT

Assumption: STU displays fault code 03 during an operator diagnostic test due to a failure to read or write the identification burst at load point.

The probable cause of this fault is damaged tape. The tape should be free of defects within the first ten inches of tape after the BOT reflective marker.

NOTE

Following any corrective action, execute operator diagnostic test 01.

| | | | |
|---|---|---|---|
| 010 | 1 | | Clean read-write head, tape cleaner, hub pads and air bearings. |
| 020 | 2 | | Change tape to a known good write-enabled tape. |
| 030 | Y | N | Without tape threaded, run diagnostic test 03. Termination code 00? |
| 040 | | Y | N Termination code 98? |
| 050 | | | 1 Go to step 040 of SAM 0004. |
| 060 | | 1 | Replace servo-control PWA. (Refer to set-up tests in servo-control PWA removal/replacement procedure.) |
| 070 | | 2 | Replace take-up motor/tach assembly. (Run set-up tests 37, 48 ) |
| 080 | Y | N | Unload tape, execute CE test 59. Termination 00? |
| 090 | 1 | 2 | Replace write driver PWA. (Run set-up tests 64, 31.) |
| 100 | 2 | 3 | Replace read-write head. (Run set-up tests 64, 31.) |
| 110 | 3 | 1 | Replace read amplifier PWA (Run set-up test 31). |
| 120 | 4 | 4 | Replace servo-control PWA. (Refer to set-up tests in servo-control PWA removal/replacement procedure.) |
| 130 | | 5 | Replace formatter read PWA. |
| | | 2 | |
| | | A | |

FAULT CODE 03

| | A | |
|---|---|---|
| | 1 | |
| | \| | |
| 140 | 6 | Replace formatter write PWA. |
| | \| | |
| 150 | 7 | Replace write cable. |

SUB-FAULT CODES, FAULT CODE 03

| | |
|---|---|
| 00 | Unable to read or write PE Identification Burst |
| 01 | Unable to read or write GCR ID, ARA Burst, or ARA ID |
| 02 | AGC fault occurred while reading or writing from BOT in GCR |

FAULT CODE 04 - LOW SPEED WRITE ERROR

Assumption: STU displays fault code 04 during an operator diagnostic test due to a failure to write a block within five attempts at low speed, or due to too many write errors while writing to EOT at low speed.

The probable causes of this fault are dirty head and damaged tape.

NOTE

Following any corrective action, execute operator diagnostic test 01.

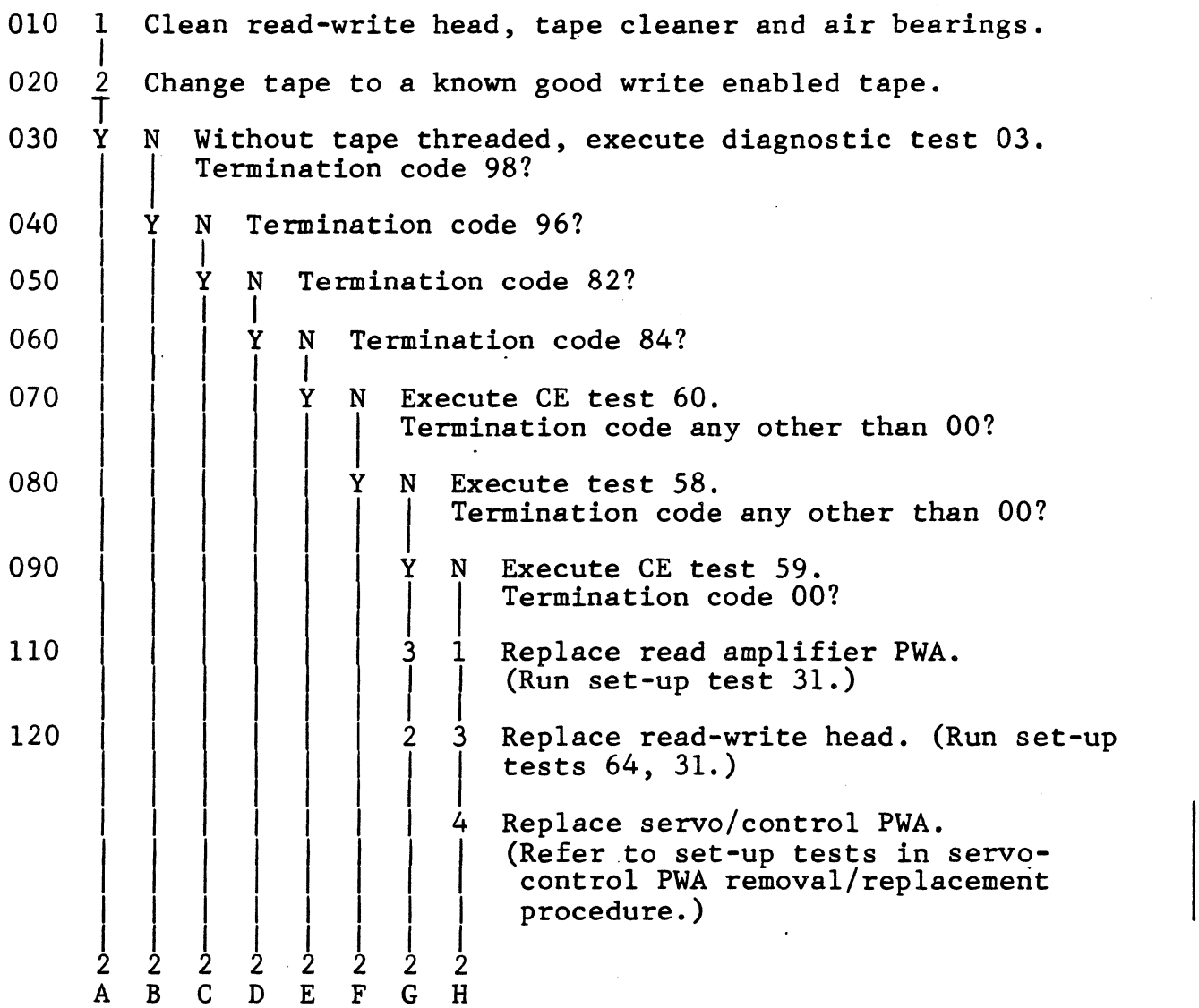

FAULT CODE 04

| | A | B | C | D | E | F | G | H | |
|---|---|---|---|---|---|---|---|---|---|
| | 1 | 1 | 1 | 1 | 1 | 1 | 1 | 1 | |
| 130 | | | | | | | 1 | 2 | Replace write driver PWA. (Run set-up tests 64, 31.) |
| 140 | | | | | | | | 5 | Replace write cable. |
| 150 | | | | | 1 | | 4 | | Replace formatter read PWA. |
| 160 | | | | | 2 | 2 | | | Replace formatter write PWA. |
| 170 | 1 | 2 | | 2 | | 1 | | | Replace servo-control PWA. (Refer to set-up tests in servo-control PWA removal/replacement procedure.) |
| 180 | 2 | 1 | | 1 | | | | | Replace take-up motor/tach assembly. (Run set-up tests 37, 48) |
| 190 | | | 1 | | | | | | Replace power driver PWA. |

SUB-FAULT CODES, FAULT CODE 04

| | |
|---|---|
| 00 | Unable to write a block in PE within 5 attempts |
| 01 | Unable to write a block in GCR within 5 attempts |
| 37 | Filemark detection error |
| 38 | More than 32 write error recoveries performed while writing to EOT |

FAULT CODE 05 - LOW SPEED READ ERROR

Assumption: STU displays fault code 05 during a diagnostic test due to a failure to read a block at low speed, or a data error was detected during a data loopback at low speed.

The probable causes of this fault are dirty head and damaged tape.

NOTE

Following any corrective action, execute operator diagnostic test 01.

| | | |
|---|---|---|
| 010 | 1 | Clean read-write head, tape cleaner and air bearings. |
| 020 | 2 | Change tape to a known good write-enabled tape. |
| 030 | 3 | Replace read amplifier PWA (Run set-up test 31). |
| 040 | 4 | Replace formatter read PWA. |
| 050 | 5 | Replace write driver PWA (Run set-up tests 64, 31). |
| 060 | 6 | Replace servo-control PWA. (Refer to set-up tests in servo-control PWA removal/replacement procedure.) |
| 070 | 7 | Replace formatter write PWA. |
| 080 | 8 | Replace read-write head. (Run set-up tests 64, 31.) |
| 090 | 9 | Replace write cable. |
| 100 | 10 | Replace take-up motor/tach assembly. (Run set-up tests 37, 48) |

SUB-FAULT CODES, FAULT CODE 05

| | |
|---|---|
| 00 | Data error detected while reading in PE (No error recovery performed) |
| 01 | Data error detected while reading in GCR (No error recovery performed) |
| 37 | Filemark detection error |

FAULT CODE 06 - HIGH SPEED WRITE ERROR

Assumption: STU displays fault code 06 during operator diagnostic test 01 due to a failure to write a block within 5 attempts at high speed, or due to too many write errors while writing to EOT at high speed.

The probable causes of this fault are dirty head and damaged tape.

NOTE

Following any corrective action, execute operator diagnostic test 01.

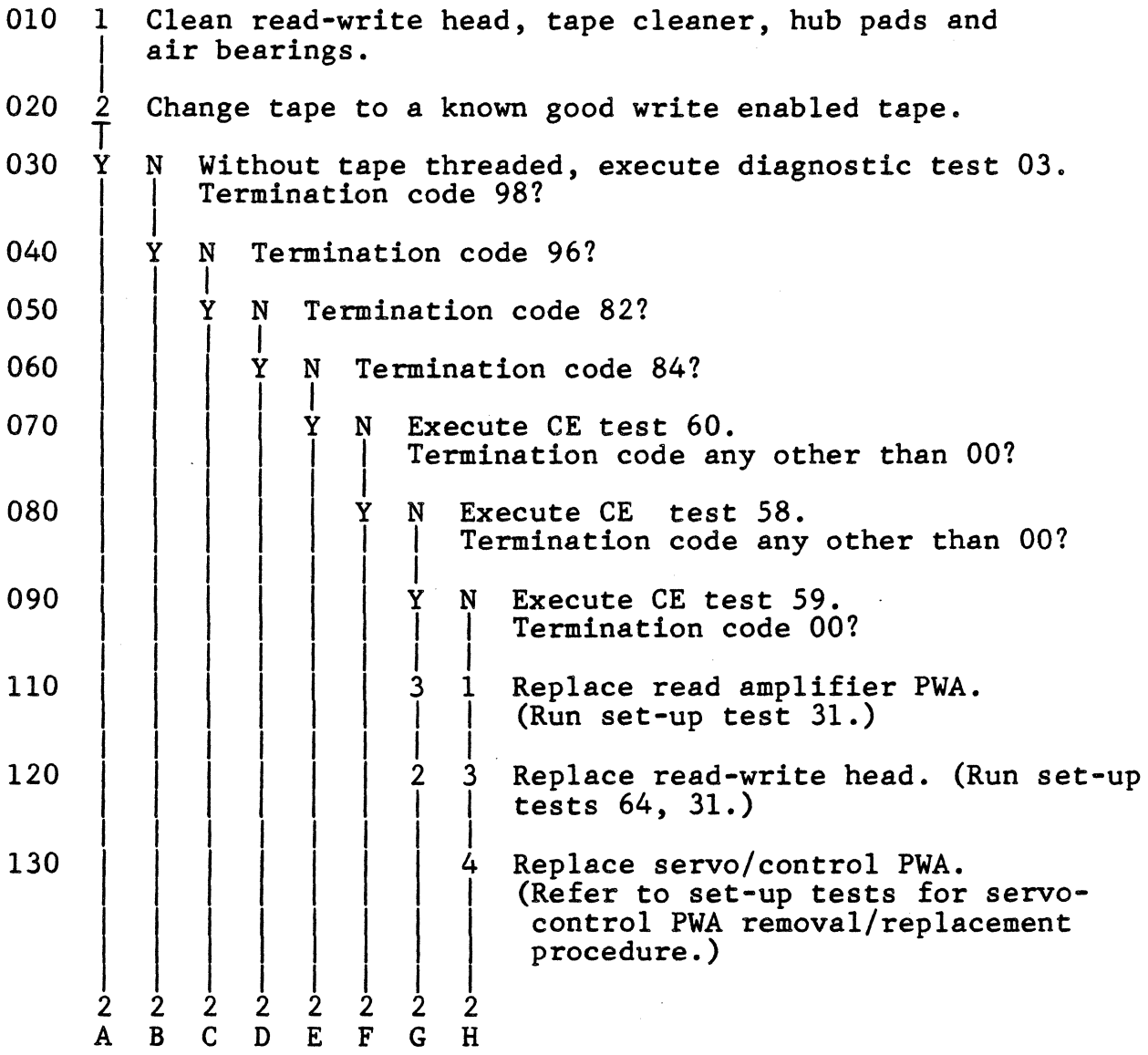

FAULT CODE 06

| | A | B | C | D | E | F | G | H | |
|---|---|---|---|---|---|---|---|---|---|
| | 1 | 1 | 1 | 1 | 1 | 1 | 1 | 1 | |
| 140 | | | | | | | 1 | 2 | Replace write driver PWA. (Run set-up tests 64, 31.) |
| 150 | | | | | | | | 5 | Replace write cable. |
| 160 | | | | | 1 | | 4 | | Replace formatter read PWA. |
| 170 | | | | | 2 | 2 | | | Replace formatter write PWA. |
| 180 | 1 | 2 | | 2 | | 1 | | | Replace servo-control PWA. (Refer to set-up tests in servo-control PWA removal/replacement procedure.) |
| 190 | 2 | 1 | | 1 | | | | | Replace take-up motor/tach assembly. (Run set-up tests 37, 48) |
| 200 | | | 1 | | | | | | Replace power driver PWA. |

SUB-FAULT CODES, FAULT CODE 06

| | |
|---|---|
| 00 | Unable to write a block in PE within 5 attempts |
| 01 | Unable to write a block in GCR within 5 attempts |
| 37 | File mark detection error |
| 38 | More than 32 write error recoveries performed while writing to EOT |

## FAULT CODE 07 - HIGH SPEED READ ERROR

Assumption: STU displays fault code 07 during operator diagnostic test 01 due to a failure to read a block at high speed, or a data error was detected during a loopback at high speed.

The probable causes of this fault are dirty head and damaged tape.

NOTE

Following any corrective action, execute operator diagnostic test 01.

| | | |
|---|---|---|
| 010 | 1 | Clean read-write head, tape cleaner, hub pads and air bearings. |
| 020 | 2 | Change tape to a known good write-enabled tape. |
| 030 | 3 | Replace read amplifier PWA (Run set-up test 31). |
| 040 | 4 | Replace formatter read PWA. |
| 050 | 5 | Replace write driver PWA (Run set-up tests 64, 31). |
| 060 | 6 | Replace servo-control PWA. (Refer to set-up tests in servo-control PWA removal/replacement procedure.) |
| 070 | 7 | Replace formatter write PWA. |
| 080 | 8 | Replace read-write head. (Run set-up tests 64, 31.) |

SUB-FAULT CODES, FAULT CODE 07

| | |
|---|---|
| 00 | Data error detected while reading in PE (No error recovery performed) |
| 01 | Data error detected while reading in GCR (No error recovery performed |
| 37 | File mark detection error |

FAULT CODE 08 - NOISE IN IBG

Assumption: STU displays fault code 08 during a diagnostic test due to the detection of noise during an erase operation. An erase operation is used by the error recovery while writing.

The probable causes of this fault are dirty head and damaged tape.

NOTE

Following any corrective action, execute operator diagnostic test 01.

| | | | | | |
|---|---|---|---|---|---|
| 010 | 1 | | | | Clean read-write head, tape cleaner, hub pads and air bearings. |
| 020 | 2 | | | | Change tape to a known good write-enabled tape. |
| 030 | Y | N | | | Execute CE test 60. Termination code other than 00? |
| 040 | | Y | N | | Execute CE test 58. Termination code other than 00? |
| 050 | | | Y | N | Unload tape and execute CE test 59. Termination code 00? |
| 060 | | | 3 | 1 | Replace read amplifier PWA (Run set-up test 31). |
| 070 | | | 5 | 3 | Replace read-write head (Run set-up test 64, 31.) |
| 080 | | | 1 | 2 | Replace write driver PWA. (Run set-up tests 64, 31.) |
| 090 | | | | 4 | Replace write cable. |
| 100 | 1 | | 4 | | Replace formatter read PWA. |
| 110 | 2 | 2 | | | Replace formatter write PWA. |
| 120 | | 1 | 2 | | Replace servo-control PWA. (Refer to set-up tests in servo-control PWA removal/replacement procedure.) |

SUB-FAULT CODES, FAULT CODE 08

| | |
|---|---|
| 00 | Noise detected while erasing |

FAULT CODE 09 - HARDWARE FAILURE

Assumption: STU displays fault code 09 as a result of unit hardware failure.

NOTE

Following any corrective action, execute operator diagnostic test 01.

| | | | |
|---|---|---|---|
| 010 | Y | N | Press CE switch. Sub-fault code 01? |
| 020 | | Y N | Sub-fault code 02? |
| 030 | | Y N | Sub-fault code 03? |
| 040 | 1 | 2 1 | Replace formatter write PWA. |
| 050 | | 1 2 | Replace servo-control PWA. (Refer to set-up tests in servo-control PWA removal/replacement procedure.) |
| 060 | | 1 | Replace formatter read PWA. |

SUB-FAULT CODES, FAULT CODE 09

| | |
|---|---|
| 00 | A hardware failure occurred while executing a read/write diagnostic |
| 01 | Formatter write PWA hardware failure |
| 02 | Formatter read PWA hardware failure |
| 03 | Servo-Control PWA hardware failure |
| 04 | Servo-Control PWA hardware interrupt fault |

FAULT CODE 10 - OPERATOR DOOR OPEN

Assumption: STU displays fault code 10 as a result of detecting an open operator door condition.

The most probable cause of this fault is the operator door being open. During any normal operation, including execution of diagnostic tests, the door must be closed.

NOTE

Following any corrective action, close the door and execute operator diagnostic test 01.

| | | | |
|---|---|---|---|
| 010 | 1 | | Ensure that all interlock switch leads are unbroken and are firmly connected to the door switch assembly. |
| 020 | 2 | | Ensure that all cables are firmly connected to the servo-control PWA. |
| 030 | Y | N | Using a DVM with negative terminal connected to J2 pin 3 of servo-control PWA, measure voltages on outermost terminals of door switch while the operator door is closed. Is voltage difference greater than 0.2 volt? |
| 040 | | Y | N Repeat previous operation for innermost terminals. Is voltage difference greater than 0.2 volt? |
| 050 | | | 1 Replace servo-control PWA. (Refer to set-up tests in servo-control PWA removal/replacement procedure) |
| 060 | 1 | 1 | Ensure door switch plunger on operator door lines up with door switch and will depress switch when door is closed. |
| 070 | 2 | 2 | Replace door switch assembly. |

FAULT CODE 10

SUB-FAULT CODES, FAULT CODE 10

| | |
|---|---|
| 01 | Door 1 open on load |
| 02 | Door 2 open after tensioning |
| 03 | Door opened during unload |
| 04 | Door open on untensioned unload |
| 05 | Door opened during untensioned unload |
| 06 | Door opened during retensioned load unload |
| 07 | Door open on diagnostic test |

FAULT CODE 11 - ABSENCE OF TAPE

Assumption: STU displays fault code 11 as a result of detecting an absence of tape condition during a load operation, or a diagnostic test that requires tape threaded.

The most probable cause of this fault is that tape is not threaded. Another possible cause is that tape is threaded with tape that has oxide removed.

NOTE

Following any corrective action, perform a tape load operation.

| | Y | N | |
|---|---|---|---|
| 010 | | | Disconnect cable from BOT/EOT sensor assembly. With operator door closed, press LOAD/REWIND switch. Is fault code 11 reported? |
| 020 | | 1 | Replace BOT/EOT sensor assembly. |
| 030 | 1 | 2 | Replace servo-control PWA. (Refer to set-up tests in servo-control PWA removal/replacement procedure.) |

SUB-FAULT CODES, FAULT CODE 11

| | |
|---|---|
| 01 | Absence of tape on load |
| 02 | Absence of tape on test 2 |

FAULT CODE 12 - LOAD FAULT

Assumption: The STU displays fault code 12 as a result of detecting a hub unlatched condition or a tension fault during load operation.

The probable cause of this fault is not latching the supply reel hub after mounting a reel of tape.

A possible cause is that tape being loaded has been subjected to extreme temperature or humidity changes. These tapes can sometimes be recognized by shaking the full reel and hearing tape pack move relative to reel. Also, while loading tape, it will be seen that hub and reel rotate counterclockwise while pack of tape rotate clockwise. To continue using these tapes, rewrap the reel at correct tension. This is achieved by performing a TEST LOAD operation, which wraps all tape onto take-up reel, and then returns tape, correctly tensioned, to the supply reel.

Other possible causes of fault code 12 are:

1. Loading a tape while in tape trailer.
2. Loading a tape with a mispositioned or missin BOT marker. The BOT marker should be positioned 16 feet $\pm$ 2 feet from physical end of tape.
3. Loading a tape with EOT/BOT sensor cable disconnected.

NOTE

Following any corrective action, a tape load operation should be performed.

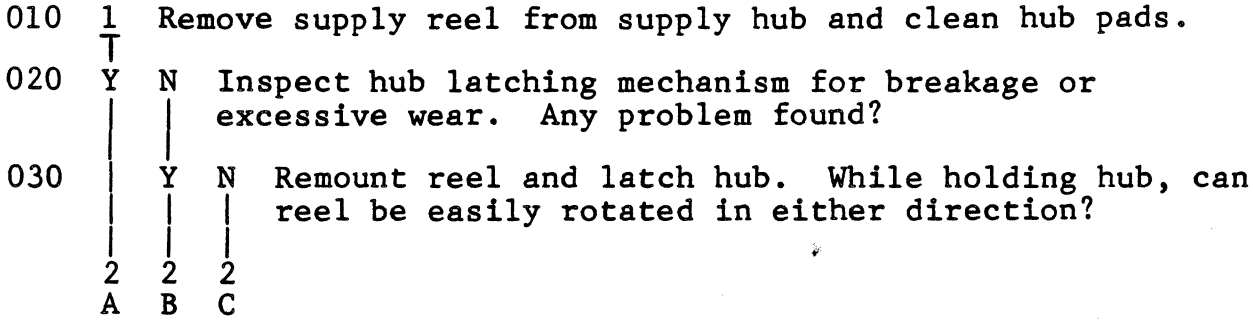

FAULT CODE 12

| | A | B | C | |
|---|---|---|---|---|
| | 1 | 1 | 1 | |
| 040 | | | 1 | Replace servo-control PWA. (Refer to set-up tests in servo-control PWA removal/replacement procedure) |
| 050 | | | 2 | Replace supply motor/tach assembly. |
| 060 | | | 3 | Replace BOT/EOT sensor assembly. |
| 070 | | | 4 | Replace take-up motor/tach assembly. (Run set-up tests 37, 48) |
| 080 | 1 | 1 | | Replace supply reel hub assembly. |

SUB-FAULT CODES, FAULT CODE 12

| | |
|---|---|
| 01 | Tension fault on load |

FAULT CODE 13 - TAPE THREADED INCORRECTLY

Assumption: STU displays fault code 13 during a load operation as a result of not establishing tension within 10 seconds.

The most probable cause of this fault is that tape has been threaded with a long loop, or tape has not been tightly wrapped on take-up hub.

NOTE

Following any corrective action, perform a tape load operation.

| | | | | |
|---|---|---|---|---|
| 010 | Y | N | | Execute CE test 43. Does pump fail to start? |
| 020 | | Y | N | Does air pressure lift tape off air bearings? |
| 030 | | | 1 | Replace filter. |
| 040 | 1 | | 2 | Replace compressor assembly. |
| 050 | | | 3 | Replace regulator assembly. |
| 060 | | Y | N | Unthread tape. Push LOAD switch. Fault code 11 displayed? |
| 070 | | 1 | | Replace BOT/EOT assembly. |
| 080 | | 2 | 1 | Replace servo-control PWA. (Refer to set-up tests in servo-control PWA removal/replacement procedure) |
| 090 | | 3 | | Replace power supply assembly. |

SUB-FAULT CODES, FAULT CODE 13

| | |
|---|---|
| 01 | Tension not detected on both sensors within 10 seconds |
| 02 | Two coarse tachs not detected within 10 seconds |
| 03 | Tension not detected within 2 seconds after seeing two coarse tachs |

FAULT CODE 14 - BOT LOCATION

Assumption: The most probable cause of this fault is that tape leader is too long. ANSI Standard X3.39 specifies that BOT reflective marker should be placed from 14 feet to 18 feet from physical beginning of tape.

NOTE

Following any corrective action, perform a tape load operation followed by an unload operation.

010 1 Replace BOT/EOT sensor assembly.

020 2 Replace servo-control PWA. (Refer to set-up tests in servo-control PWA removal/replacement procedure.)

SUB-FAULT CODES, FAULT CODE 14

| | |
|---|---|
| 01 | Tension fault. Loading. BOT not seen. |
| 02 | Absense of Tape. Loading. BOT not seen. |
| 03 | Did not get below lower tension limit within prescribed period during unload. |

FAULT CODE 15 - LOAD/UNLOAD ABORTED BY OPERATOR

Assumption: STU displays fault code 15 as a result of load or unload operation being aborted.

The most probable cause of this fault is that operator pressed RESET switch during load or unload operation.

NOTE

Following any corrective action, perform a tape load operation followed by an unload operation.

010 1 Replace operator panel assembly.

020 2 Replace servo-control PWA. (Refer to set-up tests in servo-control PWA removal/replacement procedure.)

SUB-FAULT CODES, FAULT CODE 15

| | |
|---|---|
| 01 | RESET pressed during load |
| 02 | RESET pressed during unload |

## FAULT CODE 16 - DIAGNOSTIC TAPE IS WRITE PROTECTED

Assumption: STU displays fault code 16 on execution of a read/write diagnostic test with a write protected scratch tape.

The most probable cause of this fault is that the scratch tape in use does not have a write enable ring installed.

NOTE

Following any corrective action, execute operator diagnostic test 01.

| | | | |
|---|---|---|---|
| 010 | Y | N | Is the display showing a "16" and is the "RESET" indicator lit? |
| | | 1 | Test 84 option to select display of PE density (1600 BPI) has been enabled. This is NOT an error. |
| 020 | 1 | | Remove write enable sensor cover plate and ensure connector is correctly connected to sensor. |
| 030 | Y | N | Does write permit ring push reflective ring part of supply reel hub assembly in line with write enable sensor? |
| 040 | | 1 | Replace supply reel hub assembly. |
| 050 | 1 | | Replace file protect sensor assembly. |
| 060 | 2 | | Replace servo-control PWA. (Refer to set-up tests in servo-control PWA removal/replacement procedure.) |
| 070 | 3 | | Replace formatter write PWA. |

SUB-FAULT CODES, FAULT CODE 16

| | |
|---|---|
| 00 | Attempted to execute a read/write diagnostic with write-protected tape |
| 01 | Attempted to execute operator test 01 with write-protected tape |

FAULT CODE 17 - RAN OFF END OF TAPE

Assumption: STU displays fault code 17 as a result of running off the physical end of tape.

The most probable cause of this fault is that the system continued issuing FORWARD READ/WRITE commands after EOT has been sensed. A possible cause is that the trailer is too short (ANSI Standard X3.39 specifies trailer should be longer than 25 feet).

NOTE

Following any corrective action, execute operator diagnostic test 01.

| | | | |
|---|---|---|---|
| 010 | Y | N | Load a known good tape and execute CE test 44. Does tape stop within trailer? |
| 020 | 2 | 1 | Replace servo-control PWA. (Refer to set-up tests in servo-control PWA removal/replacement procedure.) |
| 030 | 1 | 2 | Replace formatter write PWA. |

SUB-FAULT CODES, FAULT CODE 17

| | |
|---|---|
| 01 | Absence of tape . Trailer . Forward |
| 02 | Below lower tension limit . Trailer . Forward |

## FAULT CODE 18 - TAPE ALREADY LOADED

Assumption: STU displays fault code 18 as a result of attempting to execute a diagnostic test which requires tape to be untensioned.

The most probable cause of this fault is that tape is already loaded while attempting to execute test that requires tape to be untensioned.

NOTE

Following any corrective action, execute operator diagnostic test 01.

010 1 Replace servo-control PWA. (Refer to set-up tests in servo-control PWA removal/replacement procedure.)

SUB-FAULT CODES, FAULT CODE 18

| | |
|---|---|
| 00 | Attempted to execute operator test 1 with tape already loaded |

## FAULT CODE 20 - FILE TENSION SENSOR

Assumption: STU displays fault code 20 as a result of a file tension fault.

NOTE

Following any corrective action, execute a tape load operation or operator diagnostic test 01.

| | | | | | |
|---|---|---|---|---|---|
| 010 | 1 | | | | Ensure that cable between supply air bearing sensor and servo-control PWA is correctly connected. |
| 020 | Y | N | | | Press CE switch. Sub-fault code 05? |
| 030 | | Y | N | | Sub-fault code 02 or 04? |
| 040 | | | Y | N | Disconnect cable between supply air bearing sensor and servo-control PWA at servo-control PWA assembly. Try to load a tape. Fault code 20, sub-fault code 05? |
| 050 | 1 | | 1 | | Replace supply air bearing sensor. Reconnect cable. |
| 060 | 2 | 1 | 2 | 1 | Replace servo-control PWA. Reconnect cable. (Refer to set-up tests in servo-control PWA removal/replacement procedure.) |

SUB-FAULT CODES, FAULT CODE 20

| | |
|---|---|
| 00 | Offset comparator is low with minimum offset |
| 01 | Offset comparator is high with maximum offset |
| 02 | 2 oz. detected with no tension |
| 04 | Upper tension detected with no tension |
| 05 | Did not reach 2 oz. within 100 ms of takeup sensor detecting 2 oz. during load. |

FAULT CODE 21 - TAKE-UP TENSION SENSOR

Assumption: STU displays fault code 21 as a result of a take-up tension fault.

NOTE

Following any corrective action, execute a tape load operation or operator diagnostic test 01.

| | | | | | |
|---|---|---|---|---|---|
| 010 | 1 | | | | Ensure that cable between take-up air bearing sensor and servo-control PWA is correctly connected. |
| 020 | Y | N | | | Press CE switch. Sub-fault code 05? |
| 030 | | Y | N | | Sub-fault code 02 or 03 or 04? |
| 040 | | | Y | N | Disconnect cable between take-up air bearing sensor and servo-control PWA at servo-control PWA assembly. Try to load a tape. Fault code 21, sub-fault code 05? |
| 050 | 1 | | 1 | | Replace take-up air bearing sensor. Reconnect cable. |
| 060 | 2 | 1 | 2 | 1 | Replace servo-control PWA. Reconnect cable. (Refer to set-up tests in servo-control PWA removal/replacement procedure.) |

SUB-FAULT CODES, FAULT CODE 21

| | |
|---|---|
| 00 | Offset comparator is low with minimum offset |
| 01 | Offset comparator is high with maximum offset |
| 02 | 2 oz detected with no tension |
| 03 | 9 oz. detected with no tension |
| 04 | Upper tension detected with no tension |
| 05 | Did not reach 2 oz. within 100 ms of file sensor detecting 2 oz during load |

## FAULT CODE 22 - UNABLE TO TENSION TAPE

Assumption: STU displays fault code 22 as a result of being unable to maintain tape tension during a tape load operation.

The most probable cause of this fault is that the tape being loaded has been subjected to extreme temperature or humidity changes. These tapes can sometimes be recognized by shaking the full reel and hearing the tape pack move relative to the reel. To continue using these tapes, the reel must be re-wrapped at the correct tension. At the time of reporting the fault, all the tape may have been removed from the supply reel. In this case, rewrap the tape onto the supply reel (to the BOT side of the EOT marker) and perform a normal load operation. If tape was not removed from the supply reel, perform a TEST LOAD operation to remove tape.

NOTE

Perform tape load operation following any corrective action. During load operation, observe the file reel for pack slip.

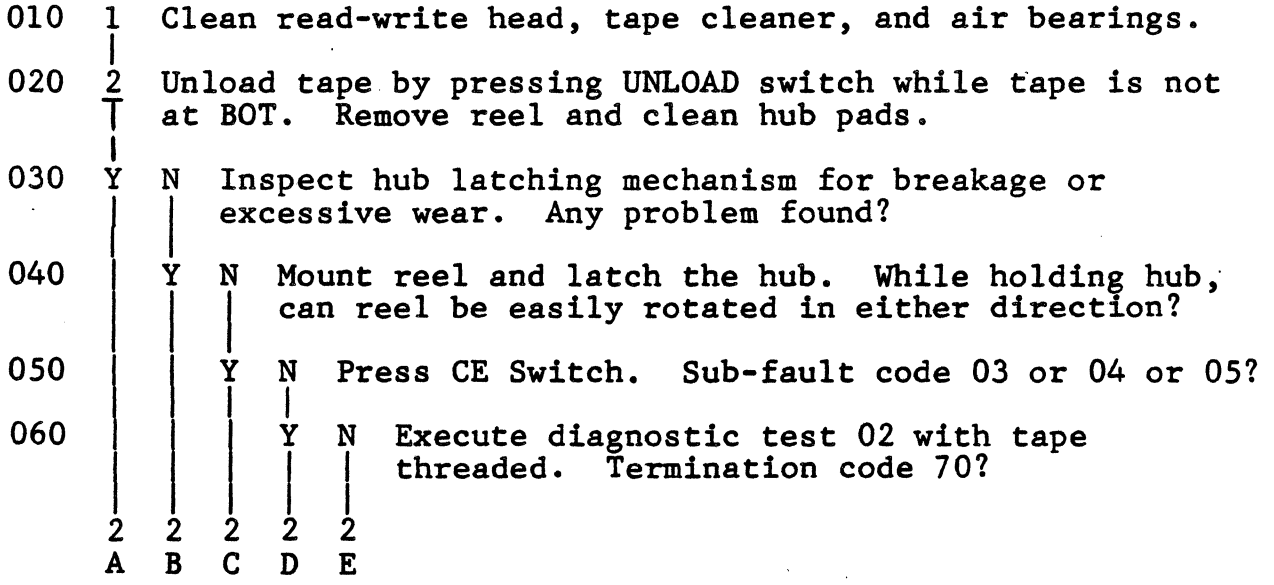

FAULT CODE 22

| | A | B | C | D | E | | | | |
|---|---|---|---|---|---|---|---|---|---|
| | 1 | 1 | 1 | 1 | 1 | | | | |
| 070 | | | | 1 | | Invalid operator sequence. Refer to diagnostic test procedures. | | | |
| 080 | | | | | Y | N | Termination code 84? | | |
| 090 | | | | | | Y | N | Termination code 92? | |
| 100 | | | | | | | Y | N | Execute diagnostic test 03 without tape threaded. Termination code 96 or 98? |
| 110 | | | 1 | | 1 | 2 | 2 | 1 | Replace servo-control PWA. (Refer to set-up tests in servo-control PWA removal/replacement procedure.) |
| 120 | | | | | | | | 2 | Replace power driver PWA. |
| 130 | | | | | | 1 | | | Replace supply motor/tach assembly. |
| 140 | | | | 2 | | | 1 | | Replace take-up motor/tach assembly. (Run set-up tests 37, 48) |
| 150 | 1 | 1 | Replace supply hub assembly. | | | | | | |

SUB-FAULT CODES, FAULT CODE 22

| | |
|---|---|
| 01 | Unable to successfully maintain tension during load (Fault is reported after tape is unloaded off EOT). |
| 02 | Unable to successfully maintain tension during load (Fault is reported with tape still in the tape path after failing to find AOT within 30 seconds) |
| 03 | Tape slipping on file reel while accelerating during tension recovery |
| 04 | Tape slipping on file reel while decelerating during tension recovery |
| 05 | Tape slipping on file reel while decelerating during tension recovery/test load |

## FAULT CODE 23 - UNABLE TO RE-ESTABLISH TENSION

Assumption: STU displays fault code 23 as a result of being unable to re-establish tape tension during a tape load operation.

The most probable cause of this fault is that the tape being loaded has been subjected to extreme temperature or humidity changes. These tapes can sometimes be recognized by shaking the full reel and hearing the tape pack move relative to the reel. To continue using these tapes, the reel must be re-wrapped at the correct tension. At the time of reporting the fault, all the tape may have been removed from the supply reel. Recovery for this case will be to re-wrap the tape onto the file reel (to the BOT side of the EOT label) and perform a normal load operation. If tape was not removed from the supply reel, a TEST LOAD operation should be performed to remove tape.

NOTE

Perform a tape load operation following any corrective action. During load operation, observe the supply reel for pack slip.

| | | |
|---|---|---|
| 010 | 1 | Rewind tape onto file reel and repeat load operation. |
| 020 | 2 | Mount a new reel of tape and retry load operation. |
| 030 | 3 | Ensure that BOT/EOT sensor assembly cable is firmly connected. |
| 040 | 4 | Replace servo-control PWA. (Refer to set-up tests in servo-control PWA removal/replacement procedure.) |
| 050 | 5 | Replace supply motor/tach assembly. |

SUB-FAULT CODES, FAULT CODE 23

| | |
|---|---|
| 01 | Unable to establish tension during test load |
| 02 | Unable to maintain tension after stopping tape following a test load |
| 03 | Unable to re-establish tension after hub latched test |

FAULT CODE 24 - HIGH TENSION

Assumption: STU displays fault code 24 as a result of a high tension detected on both air bearings.

NOTE

Following any corrective action, execute operator diagnostic test 01.

| | | | | |
|---|---|---|---|---|
| 010 | Y | N | | Execute diagnostic test 02 with tape threaded. Termination code 70? |
| 020 | 1 | | | Invalid operator sequence. Refer to diagnostic test procedures. |
| 030 | | Y | N | Termination code 82? |
| 040 | | | Y | N Termination code 73 or 74 or 92 or 98? |
| 050 | | | 3 | 1 Replace servo-control PWA. (Refer to set-up tests in servo-control PWA removal/replacement procedure.) |
| 060 | | 1 | 2 | 2 Replace power driver PWA. |
| 070 | | | 1 | Replace supply motor/tach assembly. |

SUB-FAULT CODES, FAULT CODE 24 - GROUP 1

| | |
|---|---|
| 00 | Fault occurred during constant velocity motion |
| 10 | Fault occurred on down ramp |
| 20 | Fault occurred on up ramp |
| 30 | Fault occurred in stoplock |

SUB-FAULT CODES, FAULT CODE 24 - GROUP 2

| | |
|---|---|
| 00 | Fault occurred in forward direction |
| 04 | Fault occurred in reverse direction |

SUB-FAULT CODES, FAULT CODE 24 - GROUP 3

| | |
|---|---|
| 00 | Fault occurred with low speed demanded |
| 01 | Fault occurred with high speed demanded |
| 02 | Fault occurred with rewind speed demanded |

FAULT CODE 24

SUB-FAULT CODES, FAULT CODE 24 - GROUP 4

| | |
|---|---|
| 00 | Fault occurred while drive was moving at constant velocity, on ramp, or in stoplock for less than 1 sec. |
| 01 | Fault occurred with drive in stoplock for more than 1 sec. |

SUB-FAULT CODES, FAULT CODE 24 - GROUP 5

| | |
|---|---|
| 00 | Fault occurred with pneumatic pump enabled |
| 08 | Fault occurred with pneumatic pump shut down |

FAULT CODE 25 - LOW TENSION

Assumption: STU displays fault code 25 as a result of a low tension condition being detected on one of the air bearings.

The most probable cause of this fault is damaged tape. Should tape be torn, then the fault can occur as tape passes over air bearing. Another cause, is that tape sticks to read-write head.

NOTE

Following any corrective action, execute operator diagnostic test 01.

| | | | | | |
|---|---|---|---|---|---|
| 010 | 1 | | | | Clean read-write head, tape cleaner, hub pads and air bearings. |
| 020 | 2 | | | | Change tape to a known good, write enabled scratch tape. |
| 030 | 3 | | | | Unload tape by pressing UNLOAD switch while tape is not at BOT. Remove reel and clean hub pads. |
| 040 | Y | N | | | Inspect hub latching mechanism for breakage or excessive wear. Any problem found? |
| 050 | | Y | N | | Remount reel and latch hub. While holding hub, can reel be rotated in either direction? |
| 060 | | | Y | N | Execute diagnostic test 03 without tape threaded. Termination code 98? |
| 070 | | | | 1 | Replace power driver PWA. |
| 080 | | | 2 | 2 | Replace servo-control PWA. (Refer to set-up tests in servo-control PWA removal/replacement procedure.) |
| 090 | | | | 1 | Replace take-up motor/tach assembly. (Run set-up tests 37, 48) |
| 100 | 1 | 1 | | | Replace supply hub assembly. |

FAULT CODE 25

SUB-FAULT CODES, FAULT CODE 25 - GROUP 1

| | |
|---|---|
| 00 | Supply sensor saw the fault first |
| 40 | Takeup sensor saw the fault first |

SUB-FAULT CODES, FAULT CODE 25 - GROUP 2

| | |
|---|---|
| 00 | Fault occurred during constant motion |
| 10 | Fault occurred on down ramp |
| 20 | Fault occurred on up ramp |
| 30 | Fault occurred in stoplock |

SUB-FAULT CODES, FAULT CODE 25 - GROUP 3

| | |
|---|---|
| 00 | Fault occurred in forward direction |
| 04 | Fault occurred in reverse direction |

SUB-FAULT CODES, FAULT CODE 25 - GROUP 4

| | |
|---|---|
| 00 | Fault occurred with low speed demanded |
| 01 | Fault occurred with high speed demanded |
| 02 | Fault occurred with rewind speed demanded |
| 03 | Fault occurred with slow speed mode demanded |

SUB-FAULT CODES, FAULT CODE 25 - GROUP 5

| | |
|---|---|
| 00 | Fault occurred while drive was moving at constant velocity, on ramp, or in stoplock for less than 1 sec. |
| 01 | Fault occurred with drive in stoplock for more than 1 sec. |

SUB-FAULT CODES, FAULT CODE 25 - GROUP 6

| | |
|---|---|
| 00 | Fault occurred with pneumatic pump enabled |
| 08 | Fault occurred with pneumatic pump shut down |

FAULT CODE 26 - SERVO FAULT

Assumption: STU displays fault code 26 as a result of a servo fault.

NOTE

Following any corrective action for sub-fault codes 01 to 06, thread tape onto take-up reel, wind on by hand for approximately 50 turns, and then perform UNTENSIONED UNLOAD procedure. For all other sub-fault codes, load and then unload tape.

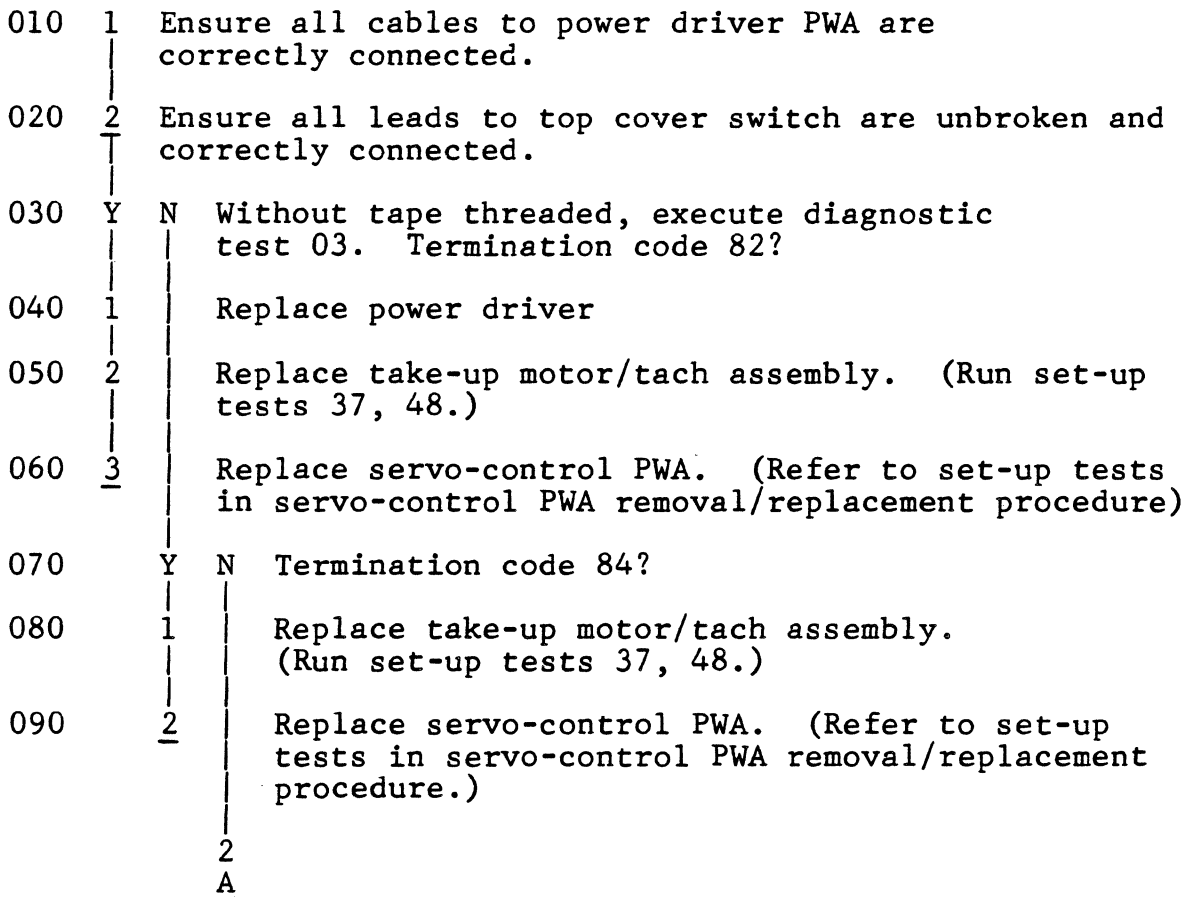

FAULT CODE 26

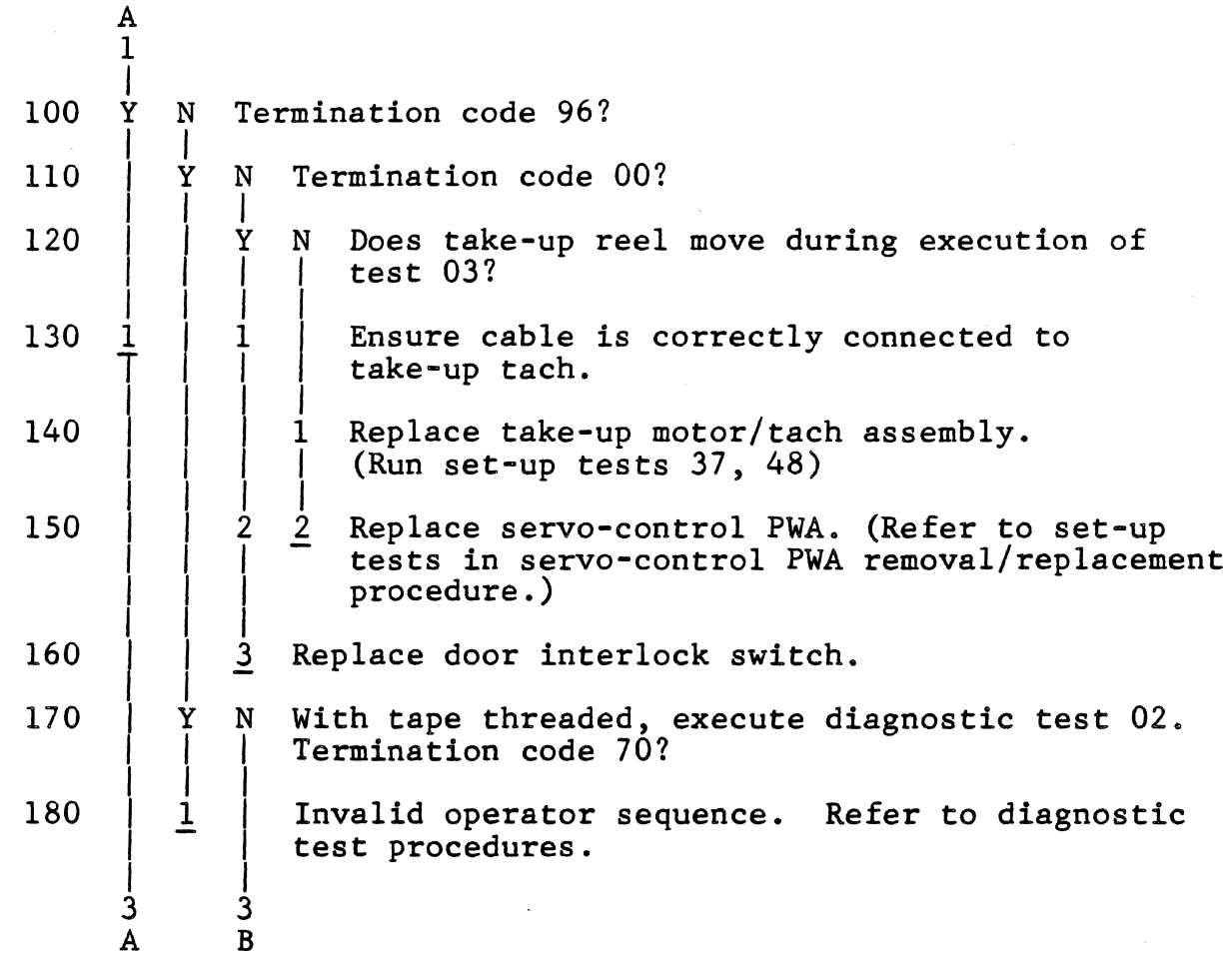

FAULT CODE 26

```
     A     B
     2     2
190  |     Y  N  Termination code 81?
     |     |  |
200  |     |  Y  N  Termination code 84?
     |     |  |  |
     |     |  |  Y  N  Termination code 84?
     |     |  |  |  |
210  |     3  3  |  1  Replace servo-control PWA. (Refer to
     |     |  |  |     set-up tests in servo-control PWA
     |     |  |  |     removal/replacement procedure.)
     |     |  |  |
220  |     |  2  1  Replace take-up motor/tach assembly.
     |     |  |     (Run set-up tests 37, 48.)
     |     |  |
230  |     1  1  Replace power driver assembly.
     |     |
240  |     2  Replace supply motor/tach assembly.
     |
250  Y  N  Does take-up reel move during execution of test 03?
     |  |
260  |  1  Replace door interlock switch.
     |  |
270  1  2  Replace take-up motor/tach assembly. (Run set-up
     |  |  tests 37, 48.)
     |  |
280  |  3  Replace servo-control PWA. (Refer to set-up tests
     |     in servo-control PWA removal/replacement procedure.)
     |
290  2  Replace power driver PWA.
```

SUB-FAULT CODES, FAULT CODE 26

| | |
|---|---|
| 01 | Takeup reel moving in wrong direction during untensioned unload |
| 02 | Takeup reel not moving during untensioned unload |
| 03 | Takeup reel too fast during untensioned unload |
| 04 | Takeup reel too slow during untensioned unload |
| 05 | Voltage sensed in wrong half of file reel amplifier bridge while pulsing supply reel |
| 06 | Timeout to get unwind speed during untensioned unload |
| 07 | Voltage sense fault in supply reel amplifier bridge during load |
| 08 | Voltage sense fault in takeup reel amplifier bridge during load |
| 09 | Fine line tach fault on load |

FAULT CODE 27 - NO COARSE TACHS

Assumption: STU displays fault code 27 as a result of not detecting any single line tachs from supply reel.

NOTE

Following any corrective action, execute operator diagnostic test 01.

| | | |
|---|---|---|
| 010 | 1 | Ensure that cable is correctly connected to supply motor/tach. |
| 020 | 2 | Replace servo-control PWA. (Refer to set-up tests in servo-control PWA removal/replacement procedure.) |
| 030 | 3 | Replace supply motor/tach assembly. |

SUB-FAULT CODES, FAULT CODE 27

| | |
|---|---|
| 01 | No coarse tachs during load |
| 02 | No coarse tachs during tension recovery section of load |
| 03 | Two coarse tachs not detected within 4 seconds during file reel radius calculation |
| 04 | File reel radius calculation out of range during load |

This page left blank intentionally.

FAULT CODE 29 - ABSENCE OF TAPE

Assumption: STU displays fault code 29 as a result of detecting absence of tape. This fault can be caused by the use of a damaged tape that has oxide missing, such that the BOT and EOT sensors detect light passing through the tape.

Unloading of tape with a short leader may also result in fault code 29.

NOTE

Following any corrective action, execute operator diagnostic test 01.

| | | | |
|---|---|---|---|
| 010 | Y | N | Disconnect cable from the EOT/BOT sensor assembly. Remove the reel of tape, close operator door, and press the LOAD switch. Fault code 11? |
| 020 | 2 | 1 | Replace servo-control PWA assembly. (Refer to set-up tests in servo-control PWA removal/replacement procedure.) |
| 030 | 1 | | Replace BOT/EOT sensor assembly. |

SUB-FAULT CODES, FAULT CODE 29

| | |
|---|---|
| 01 | Absence of tape |

FAULT CODE 30 - UP RAMP

Assumption: STU displays fault code 30 as a result of a detected fault on an up ramp. A possible cause of this fault, with stiction tapes, is when tape sticks to the read-write head.

NOTE

Following any corrective action, execute operator diagnostic test 01.

010 1 Clean read-write head, tape cleaner, hub pads and air bearings.

020 Y N With tape threaded, execute diagnostic test 02. Termination code 70?

030 1 Invalid operator sequence. Refer to diagnostic test procedures.

040 Y N Termination code 89?

050 Y N Termination code 72?

060 Y N Termination code 73?

070 Y N Termination code 74?

080 Y N Termination code 75?

090 Y N Termination code 84?

100 Y N Termination code 90?

110 Y N Termination code 91?

120 Y N Termination code 92?

130 Y N Without tape threaded, execute diagnostic test 03. Termination code 98?

140 Y N Termination code 96?

2A 2B 2C 2D 2E 2F 2G 2H 2I 2J 2K 2L

FAULT CODE 30

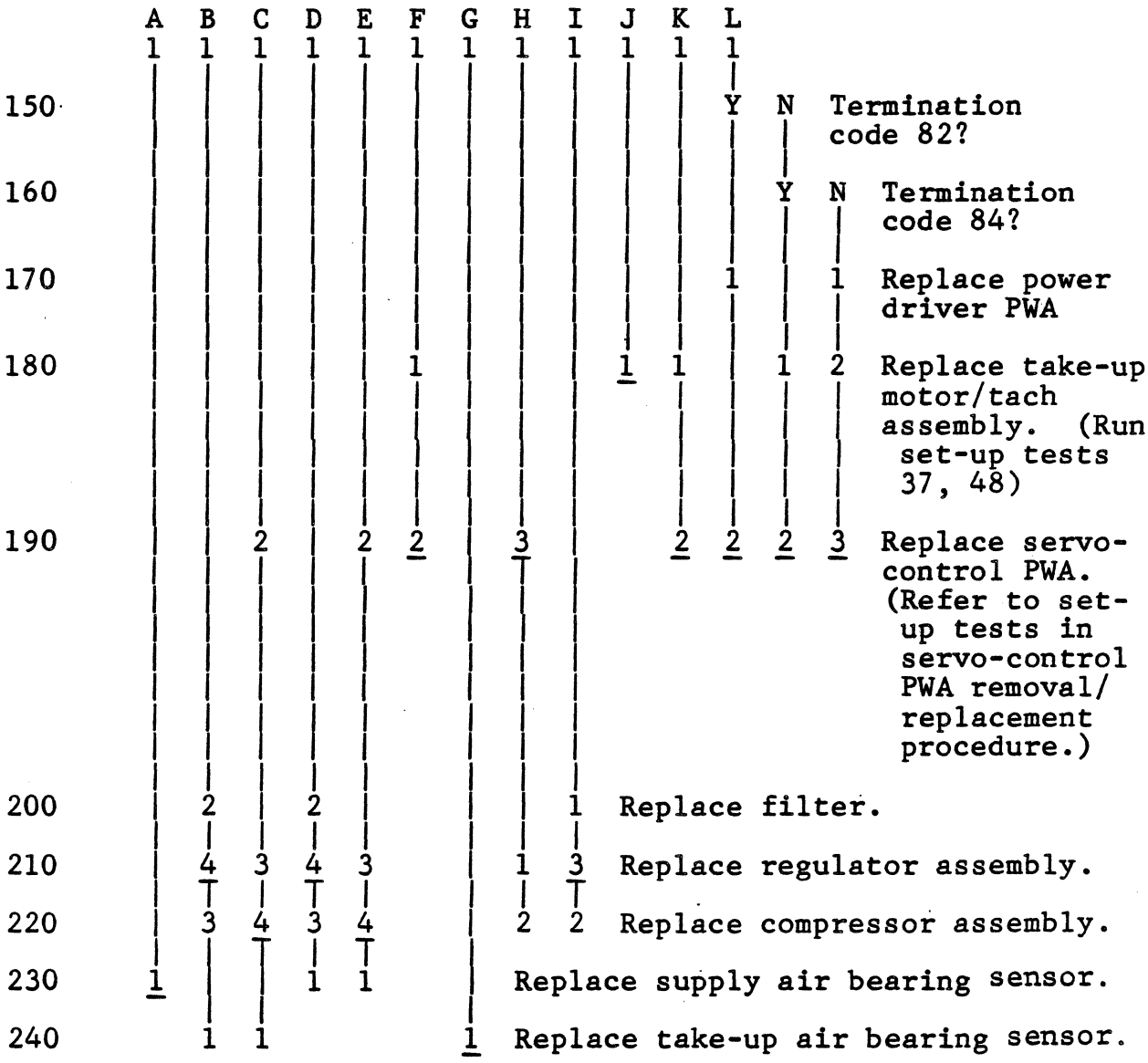


SUB-FAULT CODES, FAULT CODE 30 - GROUP 1

| | |
|---|---|
| 03 | Failed to reach erase head target within deadman time |
| 05 | Failed to reach end of up ramp within deadman time |
| 06 | Ramp time less than nominal - 50% (i.e. too fast) |
| 07 | Ramp time greater than nominal + 50% (i.e. too slow) |

FAULT CODE 30

SUB-FAULT CODES, FAULT CODE 30 - GROUP 2

| | |
|---|---|
| 00 | Fault occurred on forward ramp |
| 20 | Fault occurred on reverse ramp |

SUB-FAULT CODES, FAULT CODE 30 - GROUP 3

| | |
|---|---|
| 00 | Fault occurred on 25 ips start/stop ramp |
| 10 | Fault occurred on 12.5 ips start/stop ramp |
| 40 | Fault occurred on 75 ips streaming ramp |

FAULT CODE 31 - DOWN RAMP

Assumption: STU displays fault code 31 as a result of a detected fault on a down ramp.

NOTE

Following any corrective action, execute operator diagnostic test 01.

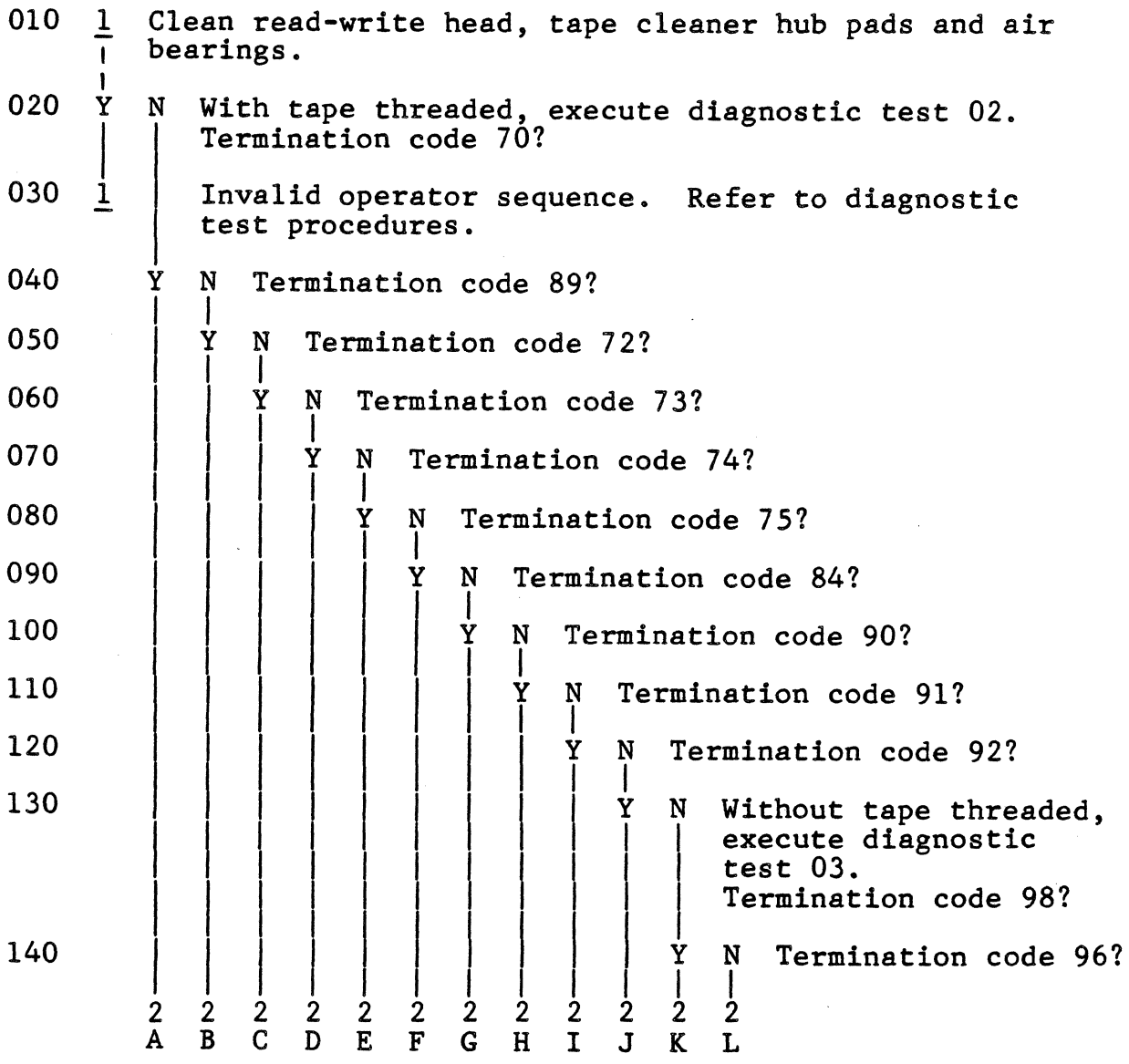

FAULT CODE 31

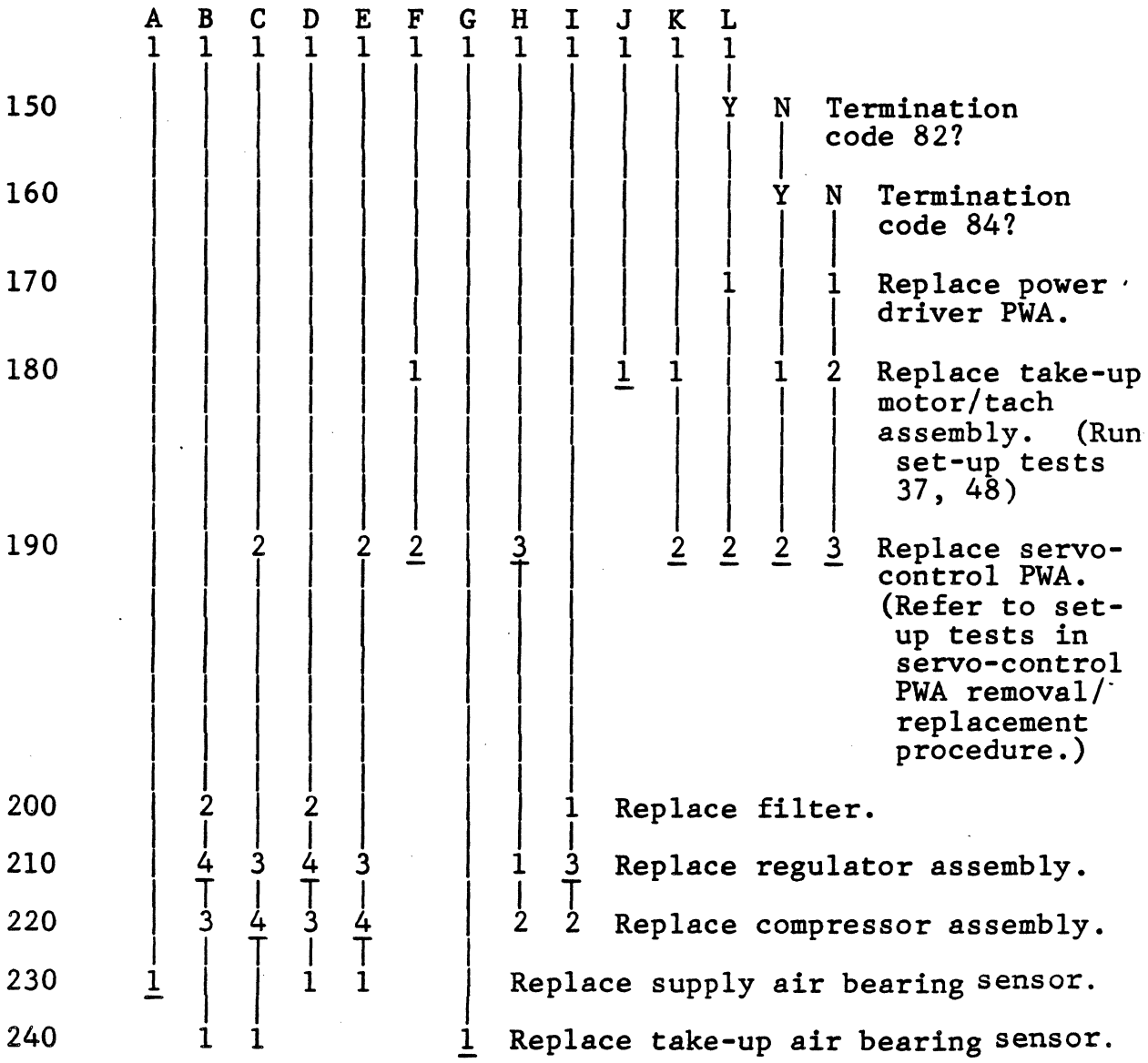


SUB-FAULT CODES, FAULT CODE 31 - GROUP 1

| | |
|---|---|
| 03 | Failed to detect change of direction (forward to reverse) on forward high speed down ramp |
| 04 | Failed to detect change of direction (reverse to forward) on reverse high speed down ramp |
| 05 | Failed to reach end of down ramp within deadman time |
| 06 | Ramp time less than nominal - 50% (i.e. too fast) |
| 07 | Ramp time greater than nominal + 50% (i.e. too slow) |

FAULT CODE 31

SUB-FAULT CODES, FAULT CODE 31 - GROUP 2

| | |
|---|---|
| 00 | Fault occurred on forward ramp |
| 20 | Fault occurred on reverse ramp |

SUB-FAULT CODES, FAULT CODE 31 - GROUP 3

| | |
|---|---|
| 00 | Fault occurred on 25 ips start/stop ramp |
| 10 | Fault occurred on 12.5 ips start/stop ramp |
| 40 | Fault occurred on 75 ips streaming ramp |

FAULT CODE 32 - STOPLOCK OVER-RUN

Assumption: STU displays fault code 32 as a result of a velocity servo fault.

NOTE

Following any corrective action, execute operator diagnostic test 01.

| | | | | | |
|---|---|---|---|---|---|
| 010 | Y | N | | | Without tape threaded, execute operator diagnostic Test 03. Termination code 96 or 98? |
| 020 | | Y | N | | Termination code 82? |
| 030 | | | Y | N | Termination code 84? |
| 040 | 2 | | | 1 | Replace servo-control PWA. (Refer to set-up tests in servo-control PWA removal/replacement procedure.) |
| 050 | | 1 | | 2 | Replace power driver PWA. |
| 060 | 1 | | 1 | 3 | Replace take-up motor/tach assembly. (Run set-up tests 37, 48) |
| 070 | | | | 4 | Replace filter. |
| 080 | | | | 5 | Replace compressor assembly. |
| 090 | | | | 6 | Replace regulator assembly. |

SUB-FAULT CODES, FAULT CODE 32

| | |
|---|---|
| 01 | Position 32 quarter tachs reverse of correct stoplock position |
| 02 | Position 32 quarter tachs forward of correct stoplock position |
| 04 | Fault occurred while in gentle dither mode |

FAULT CODE 33 - TAPE POSITIONING

Assumption: STU displays fault code 33 as a result of a tape positioning fault when about to write.

NOTE

Following any corrective action, execute operator diagnostic test 01.

| | | | |
|---|---|---|---|
| 010 | Y | N | Remove reel of tape and execute operator diagnostic test 03. Termination code 98? |
| 020 | | 1 | Replace servo-control PWA. (Refer to set-up tests in servo-control PWA removal/replacement procedure.) |
| 030 | 1 | | Replace take-up motor/tach assembly. (Run set-up tests 37, 48) |

SUB-FAULT CODES, FAULT CODE 33

| | |
|---|---|
| 01 | Passed erase head turn-on point when about to write at low speed |
| 02 | Passed erase head turn-on point when about to write at high speed |

FAULT CODE 34 - BOT POSITIONING

Assumption: STU displays fault code 34 as a result of the STU losing positioning control at load point.

NOTE

Following any corrective action, execute operator diagnostic test 01.

010 1 Replace servo-control PWA. (Refer to set-up tests in servo-control PWA removal/replacement procedure.)

SUB-FAULT CODES, FAULT CODE 34

| | |
|---|---|
| 01 | Timed out waiting for BOT in forward direction during a load point reposition. |
| 02 | Time out waiting for BOT in reverse direction during a load point reposition. |

FAULT CODE 35 - POSITIONING FAULT

Assumption: STU displays fault code 35 as a result of the STU losing positioning control.

NOTE

Following any corrective action, execute operator diagnostic test 01.

| | | | |
|---|---|---|---|
| 010 | Y | N | Remove reel of tape and execute diagnostic test 03. Termination code 98? |
| 020 | | 1 | Replace a servo-control PWA. (Refer to set-up tests in servo-control PWA removal/replacement procedure.) |
| 030 | 1 | | Replace take-up motor/tach assembly. (Run set-up tests 37, 48) |

SUB-FAULT CODES, FAULT CODE 35 - GROUP 1

| | |
|---|---|
| 00 | Failed to reach target at low speed |
| 02 | Failed to reach target at high speed |

SUB-FAULT CODES, FAULT CODE 35 - GROUP 2

| | |
|---|---|
| 00 | Failed to reach target in forward direction |
| 01 | Failed to reach target in reverse direction |

FAULT CODE 36 - SPEED FAULT

Assumption: STU displays fault code 36 as a result of a speed fault.

NOTE

Following any corrective action, execute operator diagnostic test 01.

010 With tape threaded, execute diagnostic test 02. Termination code 70? (Y / N)

020 1 — Invalid operator sequence. Refer to diagnostic test procedures.

030 Termination code 89? (Y / N)

040 Termination code 72? (Y / N)

050 Termination code 73? (Y / N)

060 Termination code 74? (Y / N)

070 Termination code 75? (Y / N)

080 Termination code 84? (Y / N)

090 Termination code 90? (Y / N)

100 Termination code 91? (Y / N)

110 Termination code 92? (Y / N)

120 1 — Go to step 010 of fault code 04.

130 1 — Replace take-up motor/tach assy (Run set-up test 37, 48)

140 2 — 2 — 2 — 3 — Replace servo-control PWA. (Refer to set-up tests in servo-control PWA removal/replacement procedure.)

150 2 — 2 — 1 — Replace filter.

2A 2B 2C 2D 2E 2F 2G 2H

FAULT CODE 36

| | A | B | C | D | E | F | G | H | |
|---|---|---|---|---|---|---|---|---|---|
| | 1 | 1 | 1 | 1 | 1 | 1 | 1 | 1 | |
| 160 | | 4 | 3 | 4 | 3 | | 1 | 3 | Replace regulator assembly. |
| 170 | | 3 | 4 | 3 | 4 | | 2 | 2 | Replace compressor assembly. |
| 180 | 1 | | | 1 | 1 | | | | Replace supply air bearing sensor. |
| 190 | | 1 | 1 | | | 1 | | | Replace take-up air bearing sensor. |

SUB-FAULT CODES, FAULT CODE 36

| | |
|---|---|
| 00 | Excessive speed when running at low speed |
| 04 | Speed too slow when running at high speed |

FAULT CODE 37 - COMPRESSOR POWER-UP

Assumption: STU displays fault code 37 as a result of not being able to re-establish tension within 5 seconds of pump power-up.

NOTE

Following any corrective action, execute diagnostic test 01.

010 1 Replace servo-control PWA. (Refer to set-up tests in servo-control PWA removal/replacement procedure.)

020 2 Replace power driver PWA.

030 3 Replace supply motor/tach assembly.

SUB-FAULT CODES, FAULT CODE 37

| | |
|---|---|
| 01 | Unable to re-establish tension within 5 seconds |

FAULT CODE 38 - ILLEGAL LOAD SEQUENCE

Assumption: STU displays fault code 38 if a LOAD sequence is attempted following test 80.

The probable cause of this fault code is pressing the LOAD switch immediately after execution of test 80.

NOTE

Following any corrective action, execute diagnostic test 01.

| | | |
|---|---|---|
| 010 | 1 | Power STU OFF, then ON. |
| | \| | |
| 020 | 2 | Replace servo/control PWA. (Refer to set-up tests in servo-control PWA removal/replacement procedure.) |

SUB-FAULT CODES, FAULT CODE 38

| | |
|---|---|
| 00 | Illegal LOAD sequence following test 80 |

DISPLAY CODE 40

This is NOT an error display. This unit has an enhanced buffered interface or a 256K Pertec interface, and the unbuffered mode ("40") option has been selected vis test 84.

No corrective action is required.

FAULT CODE 41 - STACK OVERFLOW

Assumption: STU displays fault code 41 as a result of a servo-control PWA microprocessor stack overflow fault.

NOTE

Following any corrective action, execute operator diagnostic test 01.

010 1 Replace servo-control PWA. (Refer to set-up tests in servo-control PWA removal/replacement procedure.)

SUB-FAULT CODES, FAULT CODE 41

| | |
|---|---|
| 01 | Hardware stack underflowed |
| 02 | Hardware stack overflowed |
| 03 | User stack underflowed |
| 04 | User stack overflowed |

FAULT CODE 44 - UNRECOVERABLE WRITE ERROR

Assumption: STU displays fault code 44 as a result of the error recovery procedure becoming exhausted during an on-line WRITE command; or as a result of a fatal error during write error recovery procedure.

The probable causes of this fault are dirty head and damaged tape.

NOTE

Following any corrective action, execute operator diagnostic test 01.

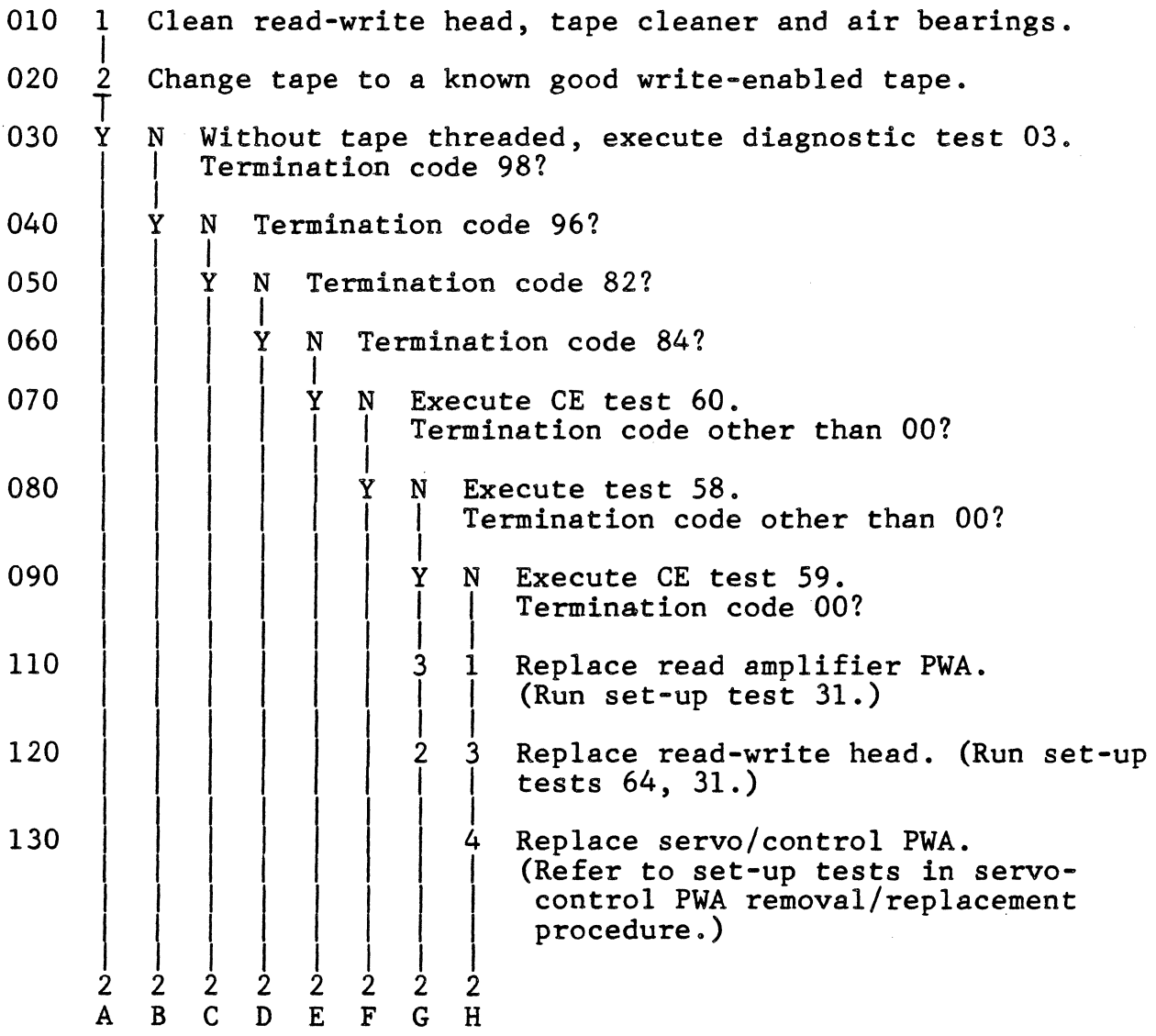

FAULT CODE 44

| | A | B | C | D | E | F | G | H | |
|---|---|---|---|---|---|---|---|---|---|
| | 1 | 1 | 1 | 1 | 1 | 1 | 1 | 1 | |
| 140 | | | | | | | 1 | 2 | Replace write driver PWA. (Run set-up tests 64, 31.) |
| 150 | | | | | | | | 5 | Replace write cable. |
| 160 | | | | | 1 | | 4 | | Replace formatter read PWA. |
| 170 | | | | | | | 5 | | Replace interface PWA. |
| 180 | | | | | 2 | 2 | | | Replace formatter write PWA. |
| 190 | 1 | 2 | | 2 | | 1 | | | Replace servo-control PWA. (Refer to set-up tests in servo-control PWA removal/replacement procedure.) |
| 200 | 2 | 1 | | 1 | | | | | Replace take-up motor/tach assembly. (Run set-up tests 37, 48) |
| 210 | | | 1 | | | | | | Replace power driver PWA. |

SUB-FAULT CODES, FAULT CODE 44

| | |
|---|---|
| 00 | Fatal error, or error recovery procedure exhausted during a WRITE command in buffered mode |

This page intentionally left blank.

FAULT CODE 47 - VELOCITY CORRECTION

Assumption: STU displays fault code 47 resulting from a velocity correction calculation fault.

This fault be caused by the velocity correction factor in the back-up memory being corrupted. Should this be the case, the power-on health check should fault, displaying fault code 51. To overcome this problem, CE test 37 could be executed. However, if all precautions are taken, the back-up memory should never be corrupted.

NOTE

Following any corrective action, execute operator diagnostic test 01.

010 1 Replace servo-control PWA. (Refer to set-up tests in servo-control PWA removal/replacement procedure.)

SUB-FAULT CODES, FAULT CODE 47

| | |
|---|---|
| 01 | Speed correction multiplier in the backup memory is out of range |

FAULT CODE 48 - UNLOAD FAULT

Assumption: STU displays fault code 48 resulting from an unload fault. This fault can be caused by a damaged tape leader.

NOTE

Following any corrective action, tape should be loaded and unloaded again.

| | | | |
|---|---|---|---|
| 010 | 1 | | Clear read-write head, tape cleaner, hub pads and air bearings. |
| 020 | 2 | | Change tape to a known good tape. |
| 030 | Y | N | Without tape threaded, execute diagnostic test 03. Termination code 98? |
| 040 | | Y N | Termination code 96? |
| 050 | | 2 1 | Replace servo-control PWA. (Refer to set-up tests in servo-control PWA removal/replacement procedure) |
| 060 | | 2 | Replace supply motor/tach assembly. |
| 065 | | 3 | Replace EOT/BOT assembly. |
| 070 | 1 | 1 | Replace take-up motor/tach assembly. (Run set-up tests 37, 48.) |

SUB-FAULT CODES, FAULT CODE 48

| | |
|---|---|
| 01 | Did not find AOT within 6 seconds of losing tension on unload |

## FAULT CODE 50 - IRRECOVERABLE DEVICE HEALTH CHECK

Assumption: STU displays fault code 50 as a result of a servo-control PWA health check fault.

NOTE

Following any corrective action, the unit should be powered off and on again.

010 1 Replace servo-control PWA. (Refer to set-up tests in servo-control PWA removal/replacement procedure.)

SUB-FAULT CODES, FAULT CODE 50

| | |
|---|---|
| 01 | Servo-Control diagnostic PROM checksum fault |
| 02 | Servo-Control flag memory fault |
| 03 | Servo-Control PTM II fault |
| 04 | Servo-Control PTM I fault |
| 05 | Servo-Control RAM fault |
| 08 | Servo-Control functional PROM checksum fault |

FAULT CODE 51 - RECOVERABLE DEVICE HEALTH CHECK

Assumption: STU displays fault code 51 during power-on health check.

A possible cause of this fault is that the write enable jumper on the servo-control PWA, which protects the contents of the back-up memory, has been left in the STORE position. If this has occurred, re-initialize the back-up memory as described in servo-control PWA verification check in the removal and replacement portion of this section.

NOTE

Following any corrective action, power the unit off and on again.

010 1 Replace servo-control PWA. (Refer to set-up tests in servo-control PWA removal/replacement procedure.)

SUB-FAULT CODES, FAULT CODE 51

| | |
|---|---|
| 01 | 2201 EEPROM checksum fault |
| 02 | 2210 EEPROM checksum fault |
| 12 | 2210 EEPROM checksum fault |
| 14 | DAC fault |

FAULT CODE 52 - SPEED CALCULATION

Assumption: STU displays fault code 52 as a result of a radius calculation fault.

A possible cause of this fault is that BOT reflective marker is not positioned correctly. ANSI Standard X3.39 specifies that the BOT marker should be placed from 14 feet to 18 feet from the physical beginning of tape.

NOTE

Following any corrective action, execute operator diagnostic test 01.

| | | | | |
|---|---|---|---|---|
| 010 | 1 | | | Check BOT marker position or try a new tape. |
| 020 | Y | N | | Without tape threaded, execute diagnostic test 03. Termination code 98? |
| 030 | | Y | N | Termination code 96? |
| 040 | | | 1 | Remove tape reel and clean hub pads. |
| 050 | | 2 | 2 | Replace servo-control PWA. (Refer to set-up tests in servo-control PWA removal/replacement procedure) |
| 060 | | | 3 | Replace supply motor/tach assembly. |
| 070 | | | 4 | Replace supply reel hub assembly. |
| 080 | 1 | 1 | | Replace take-up motor/tach assembly. (Run set-up tests 37, 48) |

FAULT CODE 52

SUB-FAULT CODES, FAULT CODE 52 - GROUP 1

| | |
|---|---|
| 10 | A previous fault caused by modulus being too large |
| 20 | A previous fault caused by modulus change inconsistent with direction of tape |
| 40 | A previous fault caused by modulus being outside expected range |
| 80 | Unable to obtain consistent harvest counts in determining the file reel radius |

SUB-FAULT CODES, FAULT CODE 52 - GROUP 2

| | |
|---|---|
| 01 | This fault caused by modulus being too large |
| 02 | This fault caused by modulus change inconsistent with direction of tape |
| 04 | This fault caused by modulus being outside expected range |
| 08 | This fault caused by harvest count greater than 8000 |

FAULT CODE 53 - ARITHMETIC ERROR

Assumption: STU displays fault code 53 as a result of a radius calculation arithmetic error.

NOTE

Following any corrective action, execute operator diagnostic test 01.

010 1 Replace servo-control PWA. (Refer to set-up tests in servo-control PWA removal/replacement procedure.)

SUB-FAULT CODES, FAULT CODE 53

| | |
|---|---|
| 01 | Attempt to divide by 0 |
| 02 | Integer overflow on floating point to integer conversation |
| 03 | Negative result on floating point subtraction |
| 04 | Radius calculation during load out of range |

FAULT CODE 54 - ERASE/WRITE CURRENT

Assumption: STU displays fault code 54 as a result of a write/erase current fault.

NOTE

Following any corrective action, execute operator diagnostic test 01.

| | | | |
|---|---|---|---|
| 010 | Y | N | Sub-fault code 04 or 10? |
| | 1 | 1 | Replace write driver PWA (Run set-up tests 64, 31). |
| 020 | 3 | 2 | Replace read amplifier PWA (Run set-up test 31). |
| 030 | 4 | 3 | Replace servo-control PWA. (Refer to set-up tests in servo-control PWA removal/replacement procedure.) |
| 040 | 2 | | Replace read-write head. (Run set-up tests 64, 31.) |
| 050 | 5 | | Replace write cable. |
| 060 | | | |

SUB-FAULT CODES, FAULT CODE 54

| | |
|---|---|
| 01 | Erase current present after degauss |
| 02 | Write current present when degauss |
| 04 | Write current not present when writing |
| 08 | Write current present when reading |
| 10 | Erase current not present when writing |
| 20 | Erase current present when reading |

FAULT CODE 55 - UNLOAD/REWIND TIMEOUT FAULT

Assumption: STU displays fault code 55 as a result of the servo-control microprocessor timing out during a rewind or load/rewind operation.

NOTE

Following any corrective action, execute operator diagnostic test 01.

010 1 Replace servo-control PWA. (Refer to set-up tests in servo-control PWA removal/replacement procedure.)

SUB-FAULT CODES, FAULT CODE 55

| | |
|---|---|
| 01 | Failed to reach BOT within specified time during load |
| 02 | Failed to reach BOT within specified time during rewind |

FAULT CODE 56 - PROCESSOR COMMUNICATION

Assumption: STU displays fault code 56 as a result of a communication problem between the two STU microprocessors.

NOTE

Following any corrective action, device dc power should be turned off and then turned on, followed by the execution of operator diagnostic test 01.

| | | | |
|---|---|---|---|
| 010 | 1 | | Ensure that the cable between the formatter write PWA and servo-control PWA is firmly connected. |
| 020 | 2 | | Ensure that the DC power connector is firmly connected to the formatter write PWA. |
| 030 | Y | N | Controller fault? |
| 040 | 2 | 1 | Replace formatter write PWA. |
| 050 | 3 | 2 | Replace servo-control PWA. (Refer to set-up tests in servo-control PWA removal/replacement procedure.) |
| 060 | 1 | 3 | Replace interface PWA. |

SUB-FAULT CODES, FAULT CODE 56

| | |
|---|---|
| 01 | MOVE TAG or COMMAND TAG or STATUS/DATA did not get reset |
| 02 | INTERRUPT or MOVE TAG did not get set |
| 03 | ACKNOWLEDGE or COMMAND TAG did not get set |
| 04 | BUSY or STATUS/DATA did not get set |
| 05 | BUSY or STATUS/DATA did not get reset |
| 06 | INTERRUPT or MOVE TAG did not get reset |
| 07 | ACKNOWLEDGE or COMMAND TAG did not get reset |
| 08 | ACKNOWLEDGE or COMMAND TAG did not get set |
| 09 | DATA STROBE did not get reset |
| 10 | DATA STROBE did not get set |
| 11 | BUS INTEGRITY test fault |
| 12 | PRIMARY STATUS test fault |
| 13 | PIA/1 PORT A test fault |
| 19 | Formatter health check did not complete within 20 msec |
| 20 | Formatter did not respond to interrupt within 1 second |
| 22 | Number of bytes transferred exceeded 32 during tests 95 or 99 |

FAULT CODE 59 - INTERFACE ADAPTER FAULT
(SCSI Interface Only)

Assumption: STU displays fault code 59 as a result of an interface adapter fault.

NOTE

Following any corrective action, the unit should be powered off and powered on again.

| | | | |
|---|---|---|---|
| 010 | Y | N | Press CE switch. Subfault code 00? |
| 020 | 1 | Y | N Run Test 57. Termination code other than 00? |
| 030 | | 1 | Ensure short RAM test switch is closed (* switch 1E/4). |
| 040 | 2 | 1 | Check all test switches to ensure they are set as follows: * switch 1D/1-6 closed<br>1D/7-8 open<br>1E/4-8 closed<br>9F/2-4 closed<br>9F/5 open<br>9H/1-4 open |
| 050 | 3 | 2 | Replace interface PWA. |

NOTE: The individual switch numbers reference the number on the switch pack and NOT the number printed on the PCB.

SUB-FAULT CODES, FAULT CODE 59

| | |
|---|---|
| 00 | 7 sec. timer expired while waiting for SCSI diagnostics to complete |
| 01 | 25 sec. timer expired while waiting for SCSI diagnostics to complete |
| 91 | PROM #1 checksum error |
| 92 | PROM #2 checksum error |
| 93 | PROM #3 checksum error |
| 94 | 8085 failed self-test |
| 95 | Processor RAM memory error |
| 97 | Timer error |
| 98 | SCSI chip error |
| 99 | 8085 processor failed initial tests |
| 9B | DMA registers failed test |
| 9D | DMA data paths failed tests |
| 9F | 256K data buffer failed tests |
| All other codes | - SCSI/STU communication fault. |

## FAULT CODE 60 - IRRECOVERABLE OPERATOR PANEL

Assumption: STU displays fault code 60 as the result of a functional operator panel switch being closed during power-on health check.

This fault can also be generated if any of the LOAD/REWIND, UNLOAD, ON-LINE or RESET switches are pressed for 15 seconds during the power-on health check.

NOTE

Following any corrective action, the STU should be powered off and powered on again.

010 1 Check control panel functional switches and repeat power-on health check.

020 2 Replace operator panel assembly.

030 3 Replace servo-control PWA. (Refer to set-up tests in servo-control PWA removal/replacement procedure.)

SUB-FAULT CODES, FAULT CODE 60

| | |
|---|---|
| 00 | LOAD/REWIND or UNLOAD or ONLINE or RESET switch permanently pressed |

FAULT CODE 61 - RECOVERABLE OPERATOR PANEL

Assumption: STU displays fault code 61 as the result of a diagnostic operator panel switch being closed during power-on health check.

This fault can also be generated if any of the TEST, STEP, CE, or EXECUTE switches are pressed for 15 seconds during the power-on health check. Should this fault occur, normal on-line operation of the STU is available after pressing the RESET switch. However, the use of STU diagnostics will not be made available.

NOTE

Following any corrective action, the STU should be powered off and powered on again.

010 1 Check control panel diagnostic switches and repeat power-on health check.

020 2 Replace operator panel assembly.

030 3 Replace servo-control PWA. (Refer to set-up tests in servo-control PWA removal/replacement procedure.)

| SUB-FAULT CODES, FAULT CODE 61 | |
|---|---|
| 00 | TEST or STEP or CE or EXEC switch permanently pressed |

## FAULT CODE 62 - FORMATTER WRITE BOARD HEALTH CHECK

Assumption: STU displays fault code 62 as a result of formatter write PWA health check fault.

NOTE

Following any corrective action, the unit should be powered off and powered on again.

| | | | |
|---|---|---|---|
| 010 | Y | N | Is the display showing a "62" and is the "RESET" indicator lit? |
| | | 1 | Test 84 option to select display of GCR density (6250 BPI) has been enabled. This is NOT an error. |
| 020 | 1 | | Replace formatter write PWA. |

### SUB-FAULT CODES, FAULT CODE 62

| | |
|---|---|
| 00 | Power up flip/flop could not be reset |
| 01 | Write data transfer did not complete within specified time |
| 02 | Residual byte count check |
| 03 | CRC generator parity error |
| 04 | 4 to 5 conversion parity error |
| 05 | AUX CRC generator parity error |
| 11 | ALUZ signal not functional |
| 12 | ALUZ 2 signal not functional |
| 13 | ALUN signal not functional |
| 14 | Arithmetic operation failed |
| 15 | Logical operation failed |
| 20 | Microprocessor internal RAM fault |
| 31 | Write checksum fault (IC E17) |
| 32 | Write checksum fault (IC E18) |
| 33 | Write checksum fault (IC E19) |
| 34 | Write checksum fault (IC G17) |
| 35 | Write checksum fault (IC G18) |
| 36 | Write checksum fault (IC G19) |

FAULT CODE 62

SUB-FAULT CODES, FAULT CODE 62

| | |
|---|---|
| 40 | LAST WORD signal stuck high |
| 41 | MOVE TAG signal not functional |
| 42 | COMMAND TAG signal not functional |
| 43 | STATUS/DATA TAG signal not functional |
| 44 | GCR status signal not functional |
| 45 | High speed (HSPD) status signal not functional |
| 46 | FLAG bit not functional |
| 47 | One of the formatter status bits to the interface board not functional |
| 48 | One of the device status bits to the interface board not functional |
| 49 | Microprocessor parity generator not functional |
| 51 | DATA STROBE signal from timer not functional |
| 52 | Variable timer not functional |
| 53 | Fixed timer (one-shot) not functional |
| 61 | 4 to 5 converter failed |
| 62 | ECC generator failed |
| 63 | CRC generator failed |
| 64 | AUX CRC generator failed |
| 71 | Write fifo available signal not functional |
| 72 | Write data transfer complete signal not functional |
| 73 | Write transfer check signal not functional |
| 81 | Sense data path failed |
| 82 | Device data path failed |
| 83 | READ INVERT signal failed |

## FAULT CODE 63 - FORMATTER READ/WRITE INTERFACE HEALTH CHECK FAULT

Assumption: STU displays fault code 63 as a result of formatter read-formatter write interface health check fault.

NOTE

Following any corrective action, the unit should be powered off and powered on again.

| | | |
|---|---|---|
| 010 | 1 | Ensure that the formatter read and formatter write PWAs are firmly connected. |
| 020 | 2 | Replace formatter read PWA. |
| 030 | 3 | Replace formatter write PWA. |

### SUB-FAULT CODES, FAULT CODE 63

| | |
|---|---|
| 01 | Read failed to go busy |
| 02 | Read stuck busy |
| 03 | Read detected an error |
| 04 | Read detected an error |
| 05 | RIMTY signal was in the wrong state |
| 06 | Write fifo available signal not functional |
| 07 | Data compare error |
| 08 | Write data transfer did not complete within specified time |
| 09 | Write transfer check |
| 11 | Read failed to go busy |
| 12 | Read stuck busy |
| 13 | Read detected an error |
| 14 | Read detected an error |
| 21 | READ GATE signal not functional |
| 22 | GCR ID signal not functional |
| 23 | FMK DET signal not functional |
| 24 | READ INTR signal not functional |
| 25 | READ CER signal not functional |
| 26 | BLOCK DET signal not functional |
| 27 | DATEN signal not functional |
| 28 | READ GATE signal failed with no interrupt set |
| 29 | Read buffer was empty with interrupt set |

FAULT CODE 63

SUB-FAULT CODES, FAULT CODE 63

| | |
|---|---|
| 30 | READ TAG signal not functional |
| 31 | BYP VFO signal not functional |
| 32 | REV signal not functional |
| 33 | GCR signal not functional |
| 34 | RAW signal not functional |
| 35 | HSPD signal not functional |
| 36 | SENSE signal not functional |
| 37 | DIAG signal not functional |
| 38 | SPACE signal not functional |
| 39 | WFM signal not functional |
| 40 | ERASE signal not functional |
| 41 | ID signal not functional |
| 42 | READ signal not functional |
| 43 | DSTR signal not functional |

FAULT CODE 64 - FORMATTER READ PWA HEALTH CHECK
FAULT IN DATA LOOPBACK

Assumption: STU displays fault code 64 as a result of formatter read PWA health check fault in data loopback.

NOTE

Following any corrective action, the unit should be powered off and powered on again.

010 1 Replace formatter read PWA.

020 2 Replace formatter write PWA.

SUB-FAULT CODES, FAULT CODE 64

11 Read checksum fault (IC D3)
12 Read checksum fault (IC D2)
13 Read checksum fault (IC D1)

21 Read failed to go busy during sense operation
22 Read stuck busy during sense operation
23 Read detected an error during sense operation
24 Read detected an error during sense operation
25 No sense read data
26 Excess sense read data

31 Read failed to go busy during self-diagnostics
32 Read stuck busy during self-diagnostics

41 Read failed to go busy during ID operation
42 Read stuck busy during ID operation
43 Read detected an error during PE ID operation
44 Read detected an error during GCR ID operation
45 READ GATE signal failed during ID operation
46 GCR ID signal failed during ID operation

FAULT CODE 64

SUB-FAULT CODES, FAULT CODE 64

51 Read failed to go busy during a write file mark operation
52 Read stuck busy during a write file mark operation
53 Read detected an error during a write file mark operation
54 Read detected an error during a write file mark operation
55 FMK DET signal was stuck high
56 FMK DET signal was not set during a PE write file mark operation
57 FMK DET signal was not set during a GCR write file mark operation

61 Read failed to go busy during a space operation
62 Read stuck busy during a space operation
63 Read detected an error in PE during a space operation
64 Read detected an error in GCR during a space operation
65 BLOCK DET signal was not detected during a space operation
66 READ GATE signal was not detected during a space operation

71 Read failed to go busy during a read-after-write operation at high speed
72 Read stuck busy during a read-after-write operation at high speed
73 Read detected an error in PE during a read-after-write operation at high speed
74 Read detected an error in GCR during a read-after-write operation at high speed

81 Read failed to go busy during a read with data compare operation
82 Read stuck busy during a read with data compare operation
83 Read detected an error in PE during a read with data compare operation
84 Read detected an error in GCR during a read with data compare operation
85 Read buffer was empty during a read with data compare operation
86 Data compare error in PE detected by write
87 Data compare error in GCR detected by write

FAULT CODE 64

91 Read failed to go busy during a read-after-write operation using VFO.
92 Read stuck busy during a read-after-write operation using VFO.
93 Read detected an error in PE during a read-after-write operation using VFO.
94 Read detected an error in GCR during a read-after-write operation using VFO.

FAULT CODE 65 - FORMATTER READ PWA HEALTH CHECK FAULT

Assumption: STU displays fault code 65 as a result of formatter read PWA health check fault.

NOTE

Following any corrective action, the unit should be powered off and powered on again.

010 1 Replace formatter read PWA.

SUB-FAULT CODES, FAULT CODE 65

11 ALUZ signal not functional
12 ALUZ signal not functional
13 ALUN signal not functional
14 Arithmetic operation failed
15 Logical operation failed

20-22 Microprocessor internal RAM fault

30 DATA STROBE signal stuck high
31 DATA STROBE signal stuck low
32 Variable timer fault
33 Variable timer overflow fault

40 One of the flag bits cannot be set
41 One of the flag bits cannot be reset
42 Microprocessor parity generator fault
43 Microprocessor parity generator fault

50 Illegal count fault (contained within deskew buffer)
51 Read transfer check not functional
52 Read data buffer input parity error not functional
53 Illegal count could not be reset by ILLEGAL COUNT ENABLE signal

FAULT CODE 65

SUB-FAULT CODES, FAULT CODE 65

| | |
|---|---|
| 60 | Error correction logic did not correct data properly |
| 61 | 3ORGT signal not functional |
| 62 | SGL PNTR, SGL CORR, or MLT PTR signal not functional |
| 63 | DUAL signal not functional |
| 64 | Error correction pointer from error correction logic was incorrect |
| 65 | DUAL CORR signal not functional |
| 66 | ECCZ signal not functional |
| 67 | VRCZ signal not functional |
| 68 | Error correction did not complete (ECDONE = 1) in nine clock cycles |
| 69 | UNCORR signal not functional |
| 70 | ECC generator failed |
| 71 | CRC generator failed |
| 72 | AUX CRC generator failed |
| 73 | ECC generator failed in reverse mode |
| 74 | CRC generator failed in reverse mode |
| 75 | AUX CRC generator failed in reverse mode |
| 80 | DATA BLOCK signal not functional |
| 81 | 7ORGT signal not functional |
| 82 | GCR TM signal not functional |
| 83 | PROM address for block PROM (IC C13) not functional |
| 84 | ANY BLOCK signal not functional |
| 91 | Deskew buffer READY signal not functional |
| 92 | DEAD TRACK signal from a deskew buffer not functional |
| 93 | Buffer READY signal did nt set for all dead track conditions. |

FAULT CODE 66 - FORMATTER/ADAPTER INTERFACE HEALTH CHECK

Assumption: STU displays fault code 66 as a result of formatter/interface health check fault.

NOTE

Following any corrective action, the unit should be powered off and powered on again.

010 1 Replace interface PWA.

020 2 Replace formatter write PWA.

SUB-FAULT CODES, FAULT CODE 66

| | |
|---|---|
| 00 | Adapter interface did not respond to a diagnostic request |
| 01 | Command from adapter contained a parity error |
| 02 | Command from adapter was incorrect |
| 03 | Adapter health check timeout |
| 11 | Command register bit in error |
| 12 | DATA BUSY signal not functional |
| 13 | Write data bus check failed |
| 14 | No data was received during write data bus check |
| 15 | LAST WORD signal not functional |
| 16 | Excessive data was received during write data bus check |
| 17 | Adapter detected an error during write data bus check |
| 18 | During read data bus check, the TRANSFER COMPLETE signal stuck high. |
| 19 | Adapter detected an error during read data bus check |
| 20 | STATUS SELECT signal not functional |

FAULT CODE 67 - INTERFACE HEALTH CHECK

Assumption: STU displays fault code 67 as a result of interface PWA health check fault.

NOTE

Following any corrective action, the unit should be powered off and powered on again.

010 1 Replace interface PWA.

FAULT CODE 68 - INTERFACE CHECKSUM

Assumption: STU displays fault code 68 as a result of interface PWA checksum fault.

NOTE

Following any corrective action, the unit should be powered off and powered on again.

010 1 Replace interface PWA.

REMOTE DIAGNOSTICS FAULT

Assumption: The STU displays fault code 69 as a result of remote diagnostic fault.

NOTE

Following any corrective action, the unit should be powered off and powered on again.

| | | | |
|---|---|---|---|
| 010 | Y | N | Press CE switch. Sub-fault code 00-04? |
| 020 | 1 | | Refer to sub-fault codes below. |
| 030 | | 1 | Replace servo-control PWA. (Refer to set-up tests in servo-control PWA removal/replacement procedure.) |
| 040 | | 2 | Replace formatter write PWA. |
| 050 | | 3 | Replace interface PWA. |

SUB-FAULT CODES, FAULT CODE 69

| | |
|---|---|
| 00 | Test cannot be run remotely |
| 01 | RESET button was pushed while executing a remote diagnostic |
| 02 | Drive was busy and test could not be executed |
| 03 | Present drive mode must be terminated prior to test execution |
| 04 | Formatter was busy and test could not be executed |

## GENERAL INFORMATION

The diagnostic test information is presented under the following headings:

- Test Requirement - Conditions which must be met before execution of the test.
- Test Description - A brief explanation of what the test is all about.
- Test Options - A list of the options and the option code applicable to the test.
- Test Sequence - A step-by-step breakdown of what happens during execution of the test. The test sequence is performed automatically when EXECUTE switch is pressed.
- Possible Diagnostic Codes - A list of the possible diagnostic codes associated with each test. Besides the test successful (00) code, diagnostic fault codes (01-69), or diagnostic termination codes (70-99) may be displayed on the operator panel. For the meaning of the fault codes and associated corrective action, refer to the Structured Analysis Method (SAM). The meaning of the termination codes is listed within each test description. Keep in mind that the meaning of a termination code may vary from test to test, and that you must refer to a specific test to determine the meaning of its associated termination codes.

## INITIATING A DIAGNOSTIC TEST AND SELECTING OPTIONS

After ensuring that the test requirements are met, follow the steps below to initiate a diagnostic test.

1. While pressing the CE switch, press the TEST switch.

   a. The DIAGNOSTIC indicator lights.

   b. The display panel indicates 00.

2. Press the STEP switch.

   a. The display number increments each time the STEP switch is pressed, or increments automatically if the STEP switch is held pressed.

   b. To facilitate test number selection, use the following procedure. Example: Test 39 selection required.

      - Press the STEP switch until 03 appears on the display panel.

      - Press the TEST switch and the 3-digit transfers to the left.

      - The display now indicates 30.

      - Press the STEP switch again until the display increments from 30 to 39.

   c. If test options (see test descriptions) are available and desired, press and hold the CE switch, and then press the EXECUTE switch while the CE switch is held pressed. The display will indicate 00. The STEP switch is then pressed to select the desired option.

3. Press the EXECUTE switch.

   a. The test is initiated.

If the test runs to completion, the display panel indicates 00. If the test fails, the display panel indicates the fault code.

LIST OF DIAGNOSTIC TESTS

The diagnostic tests are listed below in numerical sequence with the options available for each test.

| TEST NO. | DESCRIPTION | OPTION* |
|---|---|---|
| 01 | Functional Fault Detection Diagnostic | X |
| 02 | Tension Fault Isolation Diagnostic | X |
| 03 | Velocity Fault Isolation Diagnostic | X |
| 04 | Reserved | |
| 05 | Enable Buffer From Operator Panel | X |
| 06 | Disable Buffer From Operator Panel | X |
| 07-09 | Reserved | |
| 10 | Forward at Option Speed to EOT | S |
| 11 | Reverse at Option Speed to BOT | S |
| 12 | Forward Ramps at Option Speed to EOT | S |
| 13 | Reverse Ramps at Option Speed to BOT | S |
| 14 | GCR Start/Stop Repositioning | L |
| 15 | 75 ips Forward Ramps to EOT | L |
| 16 | 75 ips Reverse Ramps to BOT | L |
| 17 | 75 ips Repositioning | L |
| 18 | 75 ips Forward to EOT | L |
| 19 | 75 ips Reverse to BOT | L |
| 20 | Unit Internal Fault Detection Diagnostic | B |
| 21 | Write 2K Byte Records in PE Mode at 25 ips to EOT (at EOT, Rewind to BOT) | B |
| 22 | Read at 25 ips to EOT (at EOT, Rewind to BOT) | B |
| 23 | Write 2K Byte Records in PE Mode at 75 ips to EOT (At EOT, Rewind to BOT) | B |
| 24 | Read at 75 ips to EOT (at EOT, Rewind to BOT) | B |
| 25 | Write 2K Byte Records in GCR Mode at 25 ips to EOT (at EOT, Rewind to BOT) | B |
| 26 | Write 2K Byte Records in GCR Mode at 75 ips to EOT (at EOT, Rewind to BOT) | B |
| 27 | Reserved | |
| 28 | Perform Command Stack entered by Diagnostic 97 at 25 ips. | B |
| 29 | Perform Command Stack entered by Diagnostic 97 at 75 ips. | B |

* See Key at end of test list.

| TEST NO. | DESCRIPTION | OPTION* |
|---|---|---|
| 30 | Check Read Amplitudes at 25 and 75 ips to be within tolerance of 0.8 volt. | B |
| 31 | Determine EGC Gains at 25 and 75 ips and store gains in Backup Memory. Then check Read Amplitudes at 25 and 75 ips to be within tolerance of 0.1 volt. | X |
| 32 | Check Read Amplitudes at 25 and 75 ips with pre-recorded all 1's tape with tolerance of 0.3 volt. | B |
| 33 | Determine EGC Gains at 25 ips and store gains in Backup Memory. | X |
| 34 | Determine EGC Gains at 75 ips and store gains in Backup Memory. | X |
| 35-36 | Reserved | |
| 37 | Determine Velocity Servo Correction Multiplier and store multiplier in Backup Memory. | X |
| 38 | Apply approximately 8-ounce tension by pulsing supply reel with take-up reel in Stoplock. | X |
| 39 | Write Option Pattern in PE Mode to EOT at 25 ips (at EOT, Rewind to BOT, repeat test). | P |
| 40 | Write Option Pattern in PE Mode to EOT at 75 ips (at EOT, Rewind to BOT, repeat test). | P |
| 41 | Stoplock Take-up Reel | X |
| 42 | Enable Tension Servo | X |
| 43 | Turn-on Pump | X |
| 44 | Fast Search Forward for EOT | X |
| 45 | Refresh Scope Loop | X |
| 46 | Velocity DAC Scope Loop | X |
| 47 | Servo-Control Microprocessor Outputs Scope Loop | X |
| 48 | Enable Compressor Power-Down Timer | X |
| 49 | Reserved | |
| 50 | Enable Power-On Autoload | X |

* See Key at end of test list.

| TEST NO. | DESCRIPTION | OPTION* |
|---|---|---|
| 51 | Reserved | |
| 52 | Write Option Pattern in GCR Mode to EOT at 25 ips (at EOT, Rewind to BOT, repeat test). | P |
| 53 | Write Option Pattern in GCR Mode to EOT at 75 ips (at EOT, Rewind to BOT, repeat test). | P |
| 54 | Examine/Change Write Current Levels | X |
| 55 | Drive Internal Diagnostic | B |
| 56 | Formatter Internal Diagnostic | B |
| 57 | Interface Internal Diagnostic | B |
| 58 | Loop Write-to-Read thru Drive Interface | B |
| 59 | Loop Write-to-Read thru Read/Write | B |
| 60 | Loop Write-to-Read thru Formatter | B |
| 61 | Take-up Motor and Power Amp Full Capability Detection Test | X |
| 62 | Take-up Fine-Line Tach Fault Detection | X |
| 63 | Reserved | |
| 64 | Auto-Write Current Level Adjustment | X |
| 65-79 | Reserved | |
| 80 | Retain Tape Position On Power-Down | X |
| 81 | Select Early EOT Point | X |
| 82-83 | Reserved | |
| 84 | Select/Examine STU Options | X |
| 85-90 | Reserved | |
| 91 | Functional Fault Detection (Same as Operator Test 01 except: a) Will start in Loaded or Unloaded condition, b) Bypass EGC test.) | B |
| 92-96 | Reserved | |
| 97 | Read/Write Command Stack Generation Diagnostic | X |

OPTION KEY

X = No options.
L = Test will loop. No options.
B = CE may use the following options.

00 = Halt if read or write errors exceed limits specified, halt on completion of test (Default option).
01 = Loop on test, halt if read or write errors exceed limit specified on any given pass.
02 = Loop on test, bypass read or write error halts.

NOTE

Option of halting or bypassing errors only exists for read/write type errors; all other errors will cause test to halt, with the appropriate fault code displayed, regardless of the option selected.

P = CE may use the following option patterns:

00 = All ones pattern
01 = One-half frequency pattern
02 = One-third frequency pattern (GCR only)

S = CE may use the following option speeds:

00 = 25 ips speed
01 = 12.5 ips speed

## TEST 01: FUNCTIONAL FAULT DETECTION TEST (FOR OPERATOR)

TEST REQUIREMENT: A write-enabled scratch tape must be threaded, but not loaded.

DESCRIPTION: Test 01 executes various functions normally performed during functional operations. Unit halts with appropriate fault code if a functional fault occurs. (Approximately seven minutes is required to perform this test.)

TEST OPTIONS: None.

TEST SEQUENCE:

a. Light ONLINE and RESET indicators. Increment display from 00 to 99. Put out ONLINE and RESET indicators. Display 01.

b. Load tape.

c. Check read amplitudes at low and high speeds. REWIND.

d. WRITE 100 blocks in PE mode at 25 ips start/stop (see NOTE 1).

e. SPACE REVERSE, ERASE, and WRITE FILE MARK (check for FILE MARK DETECTED). SPACE REVERSE and check for FILE MARK DETECTED. READ FORWARD and again check for FILE MARK DETECTED.

f. READ REVERSE 100 blocks at 25 ips start/stop.

g. READ FORWARD 100 blocks at 25 ips start/stop.

h. Repeat steps d thru g at 25 ips streaming.

i. Repeat steps d thru g at 75 ips streaming.

j. WRITE 10 blocks at 75 ips thrashing (see NOTE 2).

k. READ REVERSE 10 blocks at 75 ips thrashing.

l. READ FORWARD 10 blocks at 75 ips thrashing.

m. REWIND.

n. READ FORWARD 300 blocks at 75 ips streaming. Check for FILE MARK DETECTED at blocks 100, 200, and 300.

TEST 01: (Cont'd)

o. REWIND.

p. Repeat steps d thru n for GCR mode but SPACE REVERSE where READ REVERSE is specified.

q. WRITE to EOT in GCR mode at 75 ips streaming (see NOTE 1).

r. SPACE REVERSE 1000 records at 75 ips streaming (reposition after every 250 records).

s. Write to EOT in GCR mode at 25 ips streaming.

t. REWIND.

NOTE 1. Data blocks written are 2K bytes with an incrementing pattern starting at zero for each block.

NOTE 2. Data blocks written are 256 bytes with an incrementing pattern starting at zero for each block.

POSSIBLE DIAGNOSTIC CODES:

00 - Functional test is successful
Fault Codes
01 thru 69 - Refer to Structured Analysis Method (SAM)

TEST 02: TENSION FAULT ISOLATION
(FOR OPERATOR)

TEST REQUIREMENT: Tape must be threaded, but not loaded

Valid fault code must be displayed after execution of test 01. See NOTE below.

NOTE: Test 02 will run only if test 01 terminates in one of the following fault codes: 22, 24, 26, 30, 31, 36.

TEST DESCRIPTION: Test 02 isolates servo faults by checking various assemblies of the STU.

TEST OPTIONS: None.

TEST SEQUENCE:

a. Verify operator door is closed and tape is not loaded.

b. Verify refresh DAC of servo-control PWA is operational. If not, display termination code 80.

c. Verify supply reel power amp is operational. If not, display termination code 81.

d. Verify take-up reel power amp is operational. If not, display termination code 82.

e. Verify demand velocity DAC of servo-control PWA is operational. If not, display termination code 83.

f. Move take-up reel slightly in forward direction. Check for correct count of quarter-tach pulses. If incorrect, display termination code 84.

g. Repeat step f in the reverse direction. Display termination code 84 if tach count is incorrect.

h. Verify velocity feedback loop of servo-control PWA is operational by putting take-up motor in stoplock mode, and monitoring forward and reverse quarter-tachs. Display termination code 85 if any fault is detected.

TEST 02: (Cont'd)

i. Verify that tension comparators on servo-control PWA are operational. Vary tension offsets and monitor status of tension level status lines. If any fault is detected, display termination code 87.

j. With compressor off, zero tension offsets. If fault occurs, display termination code 97.

k. Turn on compressor. If take-up sensor detects at least 2.0 ounces of tension, display termination code 90. If supply sensor detects at least 2.0 ounces of tension, display termination code 89.

l. Enable take-up servo. Move take-up reel from 0 ips to 6 ips in forward direction.

m. If both sensors do not detect at least 2.0 ounces of tension within 15 seconds, display termination code 91.

n. If, during this 15 seconds, the supply sensor does not detect 2.0 ounces of tension within 100 milliseconds after take-up sensor, display termination code 74. If take-up sensor does not detect 2.0 ounces within 100 milliseconds after file sensor, display termination code 72.

p. Move supply reel slowly in reverse direction while take-up reel is moving forward at 6 ips. If neither sensor detects at least 16 ounces of tension within 500 milliseconds, display termination code 92.

q. If, during this 500 milliseconds, the supply sensor does not detect 16 ounces of tension within 100 milliseconds after take-up sensor, display termination code 75. If take-up sensor does not detect 16 ounces of tension within 100 milliseconds after file sensor, display termination code 73.

r. Stop moving file reel in reverse direction. If tension detected on both sensors is not within limits in 100 milliseconds, display termination code 98.

s. Stop reel motion. Display fault code 00 to indicate test is successful.

TEST 02: (Cont'd)

POSSIBLE DIAGNOSTIC CODES:

00 - Tension test is successful
Fault Codes
10 thru 69 - Refer to Structured Analysis Method (SAM)
Termination Codes
70 - Test requirement not met. See test 02 requirements.
71 - Tape loaded fault.
72 - Take-up sensor fault 1
73 - Take-up sensor fault 2
74 - Supply sensor fault 1
75 - Supply sensor fault 2
80 - Refresh DAC fault
81 - Supply power amp fault
82 - Take-up power amp fault
83 - Demand velocity DAC fault
84 - Take-up motor/tach fault
85 - Velocity feedback loop fault
86 - Take-up comparator fault
87 - Supply comparator fault
89 - Supply sensor - 0 fault
90 - Take-up sensor - 0 fault
91 - Compressor failure fault
92 - Filter/Regulator, compressor, servo-control PWA fault
97 - Servo-Control PWA, sensor intermittent fault
98 - Servo-Control PWA, power amp fault

TEST 03: VELOCITY FAULT ISOLATION
(FOR OPERATOR)

TEST REQUIREMENT: Tape must not be threaded.

Valid fault code must be displayed after execution of test 01. See NOTE below.

NOTE: Test 03 will run only if test 01 terminates in one of the following fault codes: 03, 04, 06, 22, 25, 26, 30, 31, 32, 33, 35, 36, 48, 52.

TEST DESCRIPTION: Test 03 isolates velocity servo faults by checking the take-up motor/tach assembly and the velocity servo loop.

TEST OPTIONS: None.

TEST SEQUENCE:

a. Check if the operator door is closed and tape is absent.

b. Ramp up to 4 ips.

c. Check if distance between two consecutive quarter tachs is within tolerable limits.

d. If, after five tries, at least once, the distance between two consecutive quarter tachs is within limits, go to step f.

e. Display termination code 96.

f. Check that the distance between all consecutive quarter tachs is within tolerable limits.

g. If distance between any two consecutive quarter tachs is not within limits, report fault, otherwise, go to step i.

h. Repeat steps e and f. If the error is detected five times, display termination code 98.

i. Apply diagnostic lines to move take-up motor in forward direction from 0 to 75 ips, and measure time it requires to ramp-up. Stop take-up motor.

j. Calculate motor constant from this data.

TEST 03: (Cont'd)

k. If motor constant is within range, go to step e. If motor constant is out of range the first time, repeat steps i and j. Otherwise, display termination code 84.

l. Apply full current to move take-up motor in forward direction from 0 to 75 ips, and measure time it requires to ramp-up. Stop take-up motor.

m. If power amp is not capable of delivering full current in forward direction, flag a fault, otherwise, go to step o.

n. If fault is the first time, repeat steps l and m, otherwise, display termination code 82.

o. Apply full current to move take-up motor in reverse direction from 0 to 75 ips, and measure time it requires to ramp-up. Stop take-up motor.

p. If power amp is not capable of delivering full current in reverse direction, flag a fault, otherwise, go to step r.

q. If fault is the first time, repeat steps o and p, otherwise, display termination code 82.

r. Display termination code 00 to indicate successful completion of test.

POSSIBLE DIAGNOSTIC CODES:

00 - Velocity test is successful
Fault Codes
10 thru 69 - Refer to Structured Analysis Method (SAM)
Termination Codes
82 - Take-up power amp fault
84 - Take-up motor/tach fault
94 - Tape threaded fault
95 - Formatter interrupt received while test in progress.
96 - Servo loop fault
98 - Take-up motor/tach fault

TEST 05: ENABLE BUFFER FROM OPERATOR PANEL

TEST REQUIREMENT: Test 05 must be enabled by test 84 (bit 3 of byte 2 = 1). STU must have buffered enhanced interface.

TEST DESCRIPTION: By means of test 05, buffer operation can be enabled from the operator panel.

TEST OPTIONS: None.

POSSIBLE DIAGNOSTIC CODES:

00 - Test is successful
Termination Codes
90 - Buffer already enabled; test 05 disabled
91 - Buffer still disabled; test 05 disabled.

TEST 06: DISABLE BUFFER FROM OPERATOR PANEL

TEST REQUIREMENT: Test 06 must be enabled by test 84 (bit 3 of byte 2 = 1). STU must have buffered enhanced interface.

TEST DESCRIPTION: By means of test 06, buffer operation can be disabled from the operator panel.

TEST OPTIONS: None.

POSSIBLE DIAGNOSTIC CODES:

00 - Test is successful
Termination Codes
90 - Buffer already disabled; test 06 disabled
91 - Buffer still enabled; test 06 disabled.

CE TEST 10: FORWARD AT OPTION SPEED TO EOT

TEST REQUIREMENT: Tape must be loaded.

TEST DESCRIPTION: Test 10 exercises the transport in a continuous mode at the selected option speed in the forward direction. When EOT is detected, tape is stopped and the selected option speed continuous mode is executed in reverse direction. When BOT is detected, the routine starts again. Manual intervention is required to terminate the test.

TEST OPTIONS:
00 = 25 ips speed
01 = 12.5 ips speed

TEST SEQUENCE:

a. Check if the operator door is closed and tape is loaded.

b. Run forward continuously the selected option speed until EOT is detected.

c. Stop and run reverse continuously at the selected option speed until BOT is detected.

d. Stop motion and go to step b.

POSSIBLE DIAGNOSTIC CODES:

Faut Codes
10 thru 69 - Refer to Structured Analysis Method (SAM)
Termination Codes
70 - Tape not loaded fault

## CE TEST 11: REVERSE AT OPTION SPEED TO BOT

TEST REQUIREMENT: Tape must be loaded.

TEST DESCRIPTION: Test 11 exercises the transport in a continuous mode at the selected option speed in the reverse direction. When BOT is detected, tape is stopped and the selected option speed continuous mode is executed in forward direction. When EOT is detected, the routine starts again. Manual intervention is required to terminate the test.

TEST OPTIONS:
00 = 25 ips speed
01 = 12.5 ips speed

TEST SEQUENCE:

a. Check if the operator door is closed and tape is loaded.

b. Run reverse continuously the selected option speed until BOT is detected.

c. Stop and run forward continuously at the selected option speed until EOT is detected.

d. Stop motion and go to step b.

POSSIBLE DIAGNOSTIC CODES:

Fault Codes
10 thru 69 - Refer to Structured Analysis Method (SAM)
Termination Codes
70 - Tape not loaded fault

CE TEST 12: FORWARD RAMPS AT OPTION SPEED TO EOT

TEST REQUIREMENT: Tape must be loaded.

TEST DESCRIPTION: Test 12 exercises the transport in a start/stop mode at the selected option speed in the forward direction. When EOT is detected, the same the selected option speed start/stop mode is executed in the reverse direction. When BOT is detected, the routine starts again. Manual intervention is required to terminate the test.

TEST OPTIONS:
00 = 25 ips speed
01 = 12.5 ips speed

TEST SEQUENCE:

a. Check if the operator door is closed and tape is loaded.

b. Run forward at the selected option speed for 30 ms.

c. Stop and pause for 100 ms.

d. Repeat steps b and c until EOT is detected.

e. Run reverse at the selected option speed for 30 ms.

f. Stop and pause for 100 ms.

g. Repeat steps e and f until BOT is detected.

h. Go to step b.

POSSIBLE DIAGNOSTIC CODES:

Fault Codes
10 thru 69 - Refer to Structured Analysis Method (SAM)
Termination Codes
70 - Tape not loaded fault

## CE TEST 13: REVERSE RAMPS AT OPTION SPEED TO BOT

TEST REQUIREMENT: Tape must be loaded.

TEST DESCRIPTION: Test 13 exercises the transport in a start/stop mode at the selected speed option in the reverse direction. When BOT is detected, the same the selected speed option start/stop mode is executed in the forward direction. When EOT is detected, the routine starts again. Manual intervention is required to terminate the test.

TEST OPTIONS:
00 = 25 ips speed
01 = 12.5 ips speed

TEST SEQUENCE:

a. Check if the operator door is closed and tape is loaded.

b. Run reverse at the selected speed option for 30 ms.

c. Stop and pause for 100 ms.

d. Repeat steps b and c until BOT is detected.

e. Run forward at the selected speed option for 30 ms.

f. Stop and pause for 100 ms.

g. Repeat steps e and f until EOT is detected.

h. Go to step b.

POSSIBLE DIAGNOSTIC CODES:

Fault Codes
10 thru 69 - Refer to Structured Analysis Method (SAM)
Termination Codes
70 - Tape not loaded fault

## CE TEST 14: GCR START/STOP REPOSITIONING

TEST REQUIREMENT: Tape must be loaded.

TEST DESCRIPTION: Test 14 is a routine emulating GCR start/stop repositioning. It repositions the tape in the forward direction. When EOT is detected, it repositions the tape in the reverse direction. When BOT is detected, the routine starts again. Manual intervention is required to terminate the test.

TEST OPTIONS: None.

TEST SEQUENCE:

a. Verify that operator door is closed and tape is loaded.

b. Run forward at 25 ips for 100 ms.

c. Run reverse at 12.5 ips for 1 ms.

d. Repeat steps b and c until EOT is detected.

e. Run forward at 12.5 ips for 1 ms.

f. Run reverse at 25 ips for 100 ms.

g. Repeat steps e and f until BOT is detected.

h. Go to step b.

POSSIBLE DIAGNOSTIC CODES:

Fault Codes
10 thru 69 - Refer to Structured Analysis Method (SAM)
Termination Codes
70 - Tape not loaded fault

CE TEST 15: FORWARD 75 IPS RAMPS

TEST REQUIREMENT: Tape must be loaded.

TEST DESCRIPTION: Test 15 exercises the transport in a start/stop mode at 75 ips in the forward direction. When EOT is detected, the same 75 ips start/stop mode is executed in the reverse direction. When BOT is detected, the routine starts again. Manual intervention is required to terminate the test.

TEST OPTIONS: None.

TEST SEQUENCE:

a. Check if the operator door is closed and tape is loaded.

b. Run forward at 75 ips for 30 ms.

c. Stop and Pause for 400 ms.

d. Repeat steps b and c until EOT is detected.

e. Run reverse at 75 ips for 30 ms.

f. Stop and pause for 400 ms.

g. Repeat steps e and f until BOT is detected.

h. Go to step b.

POSSIBLE DIAGNOSTIC CODES:

Fault Codes
10 thru 69 - Refer to Structured Analysis Method (SAM)
Termination Codes
70 - Tape not loaded fault

CE TEST 16: REVERSE 75 IPS RAMPS

TEST REQUIREMENT: Tape must be loaded.

TEST DESCRIPTION: Test 16 exercises the transport in a start/stop mode at 75 ips in the reverse direction. When BOT is detected, the same 75 ips start/stop mode is executed in the forward direction. When EOT is detected, the routine starts again. Manual intervention is required to terminate the test.

TEST OPTIONS: None.

TEST SEQUENCE:

a. Check if the operator door is closed and tape is loaded.

b. Run reverse at 75 ips for 30 ms.

c. Stop and Pause for 400 ms.

d. Repeat steps b and c until BOT is detected.

e. Run reverse at 75 ips for 30 ms.

f. Stop and pause for 400 ms.

g. Repeat steps e and f until EOT is detected.

h. Go to step b.

POSSIBLE DIAGNOSTIC CODES:

Fault Codes
10 thru 69 - Refer to Structured Analysis Method (SAM)
Termination Codes
70 - Tape not loaded fault

## CE TEST 17: 75 IPS REPOSITIONING

TEST REQUIREMENT: Tape must be loaded.

TEST DESCRIPTION: Test 17 is a repositioning routine at 75 ips. It repositions the tape in the forward direction. When EOT is detected, it repositions the tape in the reverse direction. When BOT is detected, the routine starts again. Manual intervention is required to terminate the test.

TEST OPTIONS: None.

TEST SEQUENCE:

a. Check if the operator door is closed and tape is loaded.

b. Run forward at 75 ips for 400 ms.

c. Run reverse at 75 ips for 100 ms.

d. Repeat steps b and c until EOT is detected.

e. Run forward at 75 ips for 100 ms.

f. Run reverse at 75 ips for 400 ms.

g. Repeat steps e and f until BOT is detected.

h. Go to step b.

POSSIBLE DIAGNOSTIC CODES:

Fault Codes
10 thru 69 - Refer to Structured Analysis Method (SAM)
Termination Codes
70 - Tape not loaded fault

CE TEST 18: FORWARD 75 IPS CONTINUOUS

TEST REQUIREMENT: Tape must be loaded.

TEST DESCRIPTION: Test 18 exercises the transport in a continuous mode at 75 ips in the forward direction. When EOT is detected, tape is stopped and 75 ips continuous mode is executed in the reverse direction. When BOT is detected, the routine starts again. Manual intervention is required to terminate the test.

TEST OPTIONS: None.

TEST SEQUENCE:

a. Check if the operator door is closed and tape is loaded.

b. Run forward continuously 75 ips until EOT is detected.

c. Stop and run reverse continuously at 75 ips until BOT is detected.

d. Stop motion and go to step b.

POSSIBLE DIAGNOSTIC CODES:

Fault Codes
10 thru 69 - Refer to Structured Analysis Method (SAM)
Termination Codes
70 - Tape not loaded fault

CE TEST 19: REVERSE 75 IPS CONTINUOUS

TEST REQUIREMENT: Tape must be loaded.

TEST DESCRIPTION: Test 19 exercises the transport in a continuous mode at 75 ips in the reverse direction. When BOT is detected, tape is stopped and 75 ips continuous mode is executed in the forward direction. When EOT is detected, the routine starts again. Manual intervention is required to terminate the test.

TEST OPTIONS: None.

TEST SEQUENCE:

a. Check if the operator door is closed and tape is loaded.

b. Run reverse continuously 75 ips until BOT is detected.

c. Stop and run forward continuously at 75 ips until EOT is detected.

d. Stop motion and go to step b.

POSSIBLE DIAGNOSTIC CODES:

Fault Codes
10 thru 69 - Refer to Structured Analysis Method (SAM)
Termination Codes
70 - Tape not loaded fault

## CE TEST 20: UNIT INTERNAL DIAGNOSTICS

TEST REQUIREMENT: Tape must not be loaded.

TEST DESCRIPTION: Test 20 checks out the internal hardware of the drive, the formatter and interface. It also checks out the bus between the formatter and interface.

TEST OPTIONS:
- 00 = Halt if read or write errors exceed limits specified, halt on completion of test (Default option).
- 01 = Loop on test, halt if read or write errors exceed limit specified on any given pass.
- 02 = Loop on test, bypass read or write error halts.

NOTE

Option of halting or bypassing errors only exists for read/write type errors; all other errors will cause test to halt, with appropriate fault code displayed, regardless of the option selected. Wait at least 20 seconds after Test 20 is over before placing STU on-line.

TEST SEQUENCE:

a. Check out the device internal hardware.
b. Check out the formatter internal hardware.
c. Check out the bus between the formatter and interface.
d. Check out the interface internal hardware.

POSSIBLE DIAGNOSTIC CODES:

00 - Test is successful
Fault Codes
50 - Drive health check fault
56 - Processor communication fault
62 - Formatter write PWA health check fault
63 - Formatter read/write interface health check fault
64 - Formatter read PWA health check fault in data loopback
65 - Formatter read PWA health check fault
66 - Formatter interface health check fault
67 - Interface health check fault
68 - Interface checksum fault

CE TEST 21: 25 IPS STREAMING WRITE TO EOT IN PE MODE

TEST REQUIREMENT: A write-enabled scratch tape must be loaded.

TEST DESCRIPTION: Test 21 rewinds the tape and writes 2K byte records, incrementing data pattern to EOT at 25 ips streaming mode. On detection of EOT, it rewinds and positions at BOT. If a write error occurs, the unit performs Backspace, Erase, and attempts to write again. If more than 5 consecutive erases are required, the test terminates with a write fault. If 32 erases are required in one complete pass, the test terminates with a write fault. All functional checks are active throughout test.

TEST OPTIONS:
- 00 = Halt if read or write errors exceed limits specified, halt on completion of test (Default option).
- 01 = Loop on test, halt if read or write errors exceed limit specified on any given pass.
- 02 = Loop on test, bypass read or write error halts.

NOTE

Option of halting or bypassing errors only exists for read/write type errors; all other errors will cause test to halt, with appropriate fault code displayed, regardless of the option selected.

TEST SEQUENCE:

a. REWIND to BOT (this function is not performed if 02 option is selected).
b. WRITE 2K byte records at 25 ips streaming to EOT.
c. REWIND to BOT.

POSSIBLE DIAGNOSTIC CODES:

00 - Test is successful
Fault Codes
03 - ID check
04 - Low speed write error
08 - Noise detected while erasing
09 - Hardware failure
10 thru 69 - Refer to Structured Analysis Method (SAM)
Termination Codes
70 - Tape not loaded fault

CE TEST 22: 25 IPS READ TO EOT

TEST REQUIREMENT: A pre-written tape must be loaded.

TEST DESCRIPTION: Test 22 rewinds the tape and reads any pre-written tape to EOT at 25 ips. Any read error halts the test with a fault code. All functional checks are active. On detection of EOT, it rewinds and positions at BOT.

TEST OPTIONS:
- 00 = Halt if read or write errors exceed limits specified, halt on completion of test (Default option).
- 01 = Loop on test, halt if read or write errors exceed limit specified on any given pass.
- 02 = Loop on test, bypass read or write error halts.

NOTE

Option of halting or bypassing errors only exists for read/write type errors; all other errors will cause test to halt, with appropriate fault code displayed, regardless of the option selected.

TEST SEQUENCE:

a. Rewind to BOT (this function is not performed if 02 option is selected).
b. Read records at 25 ips streaming to EOT.
c. Rewind to BOT.

POSSIBLE DIAGNOSTIC CODES:

00 - Test is successful
Fault Codes
03 - ID check
05 - Low speed read error
09 - Hardware failure
10 thru 69 - Refer to Structured Analysis Method (SAM)
Termination Codes
70 - Tape not loaded fault

CE TEST 23: 75 IPS STREAMING WRITE TO EOT IN PE MODE

TEST REQUIREMENT: A write-enabled scratch tape must be loaded.

TEST DESCRIPTION: Test 23 rewinds the tape and writes 2K byte records, incrementing data patterns to EOT at 75 ips in streaming mode. On detection of EOT, it rewinds and positions at BOT. If a write error occurs, the unit performs BACKSPACE, ERASE, and attempts to write again. If more than 5 consecutive erases are required, the test terminates with a write fault. If 32 erases are required in one complete pass, the test terminates with a write fault. All functional checks are active throughout test.

TEST OPTIONS:
- 00 = Halt if read or write errors exceed limits specified, halt on completion of test (Default option).
- 01 = Loop on test, halt if read or write errors exceed limit specified on any given pass.
- 02 = Loop on test, bypass read or write error halts.

NOTE

Option of halting or bypassing errors only exists for read/write type errors; all other errors will cause test to halt, with appropriate fault code displayed, regardless of the option selected.

TEST SEQUENCE:

a. REWIND to BOT (this function is not performed if 02 option is selected).
b. WRITE 2K byte records at 75 ips streaming to EOT.
c. REWIND to BOT.

POSSIBLE DIAGNOSTIC CODES:

00 - Test is successful
Fault Codes
03 - ID check
06 - High speed write error
08 - Noise detected while erasing
09 - Hardware failure
10 thru 69 - Refer to Structured Analysis Method (SAM)
Termination Codes
70 - Tape not loaded fault

CE TEST 24: 75 IPS READ TO EOT

TEST REQUIREMENT: A pre-written tape must be loaded.

TEST DESCRIPTION: Test 24 rewinds the tape and reads any pre-written tape to EOT at 75 ips. Any read error halts the test with a fault code. All functional checks are active. On detection of EOT, it rewinds and positions at BOT.

TEST OPTIONS:

00 = Halt if read or write errors exceed limits specified, halt on completion of test (Default option).
01 = Loop on test, halt if read or write errors exceed limit specified on any given pass.
02 = Loop on test, bypass read or write error halts.

NOTE

Option of halting or bypassing errors only exists for read/write type errors; all other errors will cause test to halt, with appropriate fault code displayed, regardless of the option selected.

TEST SEQUENCE:

a. REWIND to BOT (this function is not performed if 02 option is selected).
b. READ records at 75 ips streaming to EOT.
c. REWIND to BOT.

POSSIBLE DIAGNOSTIC CODES:

00 - Test is successful
Fault Codes
03 - ID check
07 - High speed read error
09 - Hardware failure
10 thru 69 - Refer to Structured Analysis Method (SAM)
Termination Codes
70 - Tape not loaded fault

CE TEST 25: 25 IPS STREAMING WRITE TO EOT IN GCR MODE

TEST REQUIREMENT: A write-enabled scratch tape must be loaded.

TEST DESCRIPTION: Test 25 rewinds the tape and writes 2K byte records, incrementing data pattern to EOT at 25 ips streaming mode. On detection of EOT, it rewinds and positions at BOT. If a write error occurs, the unit performs BACKSPACE, ERASE, and attempts to write again. If more than 5 consecutive erases are required, the test terminates with a write fault. If 32 erases are required in one complete pass, the test terminates with a write fault. All functional checks are active throughout test.

TEST OPTIONS:
- 00 = Halt if read or write errors exceed limits specified, halt on completion of test (Default option).
- 01 = Loop on test, halt if read or write errors exceed limit specified on any given pass.
- 02 = Loop on test, bypass read or write error halts.

NOTE

Option of halting or bypassing errors only exists for read/write type errors; all other errors will cause test to halt, with appropriate fault code displayed, regardless of the option selected.

TEST SEQUENCE:

a. REWIND to BOT (this function is not performed if 02 option is selected).
b. WRITE 2K byte records at 25 ips streaming to EOT.
c. REWIND to BOT.

POSSIBLE DIAGNOSTIC CODES:

00 - Test is successful
Fault Codes
03 - ID check
04 - Low speed write error
08 - Noise detected while erasing
09 - Hardware failure
10 thru 69 - Refer to Structured Analysis Method (SAM)
Termination Codes
70 - Tape not loaded fault

CE TEST 26: 75 IPS STREAMING WRITE TO EOT IN GCR MODE

TEST REQUIREMENT: A write-enabled scratch tape must be loaded.

TEST DESCRIPTION: Test 26 rewinds the tape and writes 2K byte records, incrementing data patterns to EOT at 75 ips in streaming mode. On detection of EOT, it rewinds and positions at BOT. If a write error occurs, the unit performs BACKSPACE, ERASE, and attempts to write again. If more than 5 consecutive erases are required, the test terminates with a write fault. If 32 erases are required in one complete pass, the test terminates with a write fault. All functional checks are active throughout test.

TEST OPTIONS:
- 00 = Halt if read or write errors exceed limits specified, halt on completion of test (Default option).
- 01 = Loop on test, halt if read or write errors exceed limit specified on any given pass.
- 02 = Loop on test, bypass read or write error halts.

NOTE

Option of halting or bypassing errors only exists for read/write type errors; all other errors will cause test to halt, with appropriate fault code displayed, regardless of the option selected.

TEST SEQUENCE:

a. REWIND to BOT (this function is not performed if 02 option is selected).
b. WRITE 2K byte records at 75 ips streaming to EOT.
c. REWIND to BOT.

POSSIBLE DIAGNOSTIC CODES:

00 - Test is successful
Fault Codes
03 - ID check
06 - High speed write error
08 - Noise detected while erasing
09 - Hardware failure
10 thru 69 - Refer to Structured Analysis Method (SAM)
Termination Codes
70 - Tape not loaded fault

CE TEST 28: PERFORM COMMAND STACK AT 25 IPS START/STOP

TEST REQUIREMENT:

a. If a write-type operation is desired, a write-enabled scratch tape must be loaded.

b. If a read-type operation is desired, a pre-recorded tape must be loaded.

TEST DESCRIPTION: Test 28 performs the three-level command stack entered by Test 97. If option 01 is entered, the stack will be repeated until EOT or BOT is detected. If write operation is being performed upon an error, a BACKSPACE, ERASE, and REWRITE is performed. If a read operation is being performed, any uncorrectable read error causes the test to fail with a read fault. All functional checks are active throughout the test.

TEST OPTIONS:

00 = Halt if read or write errors exceed limits specified, halt on completion of test (Default option).
01 = Loop on test, halt if read or write errors exceed limit specified on any given pass.
02 = Loop on test, bypass read or write error halts.

NOTE

Option of halting or bypassing errors only exists for read/write type errors; all other errors will cause test to halt, with appropriate fault code displayed, regardless of the option selected.

POSSIBLE DIAGNOSTIC CODES:

00 - Test is successful
Fault Codes
03 - ID check
04 - Low speed write error
05 - Low speed read error
08 - Noise detected while erasing
09 - Hardware failure
10 thru 69 - Refer to Structured Analysis Method (SAM)
Termination Codes
70 - Tape not loaded fault

CE TEST 29: PERFORM COMMAND STACK AT 75 IPS THRASHING

TEST REQUIREMENT:

a. If a write-type operation is desired, a write-enabled scratch tape must be loaded.

b. If read-type operation is desired, a pre-recorded tape must be loaded.

TEST DESCRIPTION: Test 29 performs the three-level command stack entered by test 97. If option 01 is entered, the stack will be repeated until EOT or BOT is detected. If write operation is being performed upon an error, a backspace, erase, and rewrite operation is performed. If read operation is being performed, any uncorrectable read error will cause the test to fail with a read fault. All functional checks are active throughout the test.

TEST OPTIONS:

00 = Halt if read or write errors exceed limits specified, halt on completion of test (Default option).
01 = Loop on test, halt if read or write errors exceed limit specified on any given pass.
02 = Loop on test, bypass read or write error halts.

NOTE

Option of halting or bypassing errors only exists for read/write type errors; all other errors will cause test to halt, with appropriate fault code displayed, regardless of the option selected.

POSSIBLE DIAGNOSTIC CODES:

00 - Test is successful
Fault Codes
03 - ID check
06 - High speed write error
07 - High speed read error
08 - Noise detected while erasing
09 - Hardware failure
10 thru 69 - Refer to Structured Analysis Method (SAM)
Termination Codes
70 - Tape not loaded fault

CE TEST 30: CHECK READ AMPLITUDES AT 25 AND 75 IPS WITH TOLERANCE OF + 0.8 VOLTS

TEST REQUIREMENT: Tape must be loaded and not write protected, and must not be near EOT.

TEST DESCRIPTION: Test 30 checks that read amplitudes at 25 and 75 ips are 1.5 + 0.8 volts. For 25 ips, the minimum read amplifier gain value is determined for each track, such that the peak-to-peak voltage at the analog test point is 1.5 volts. This generates an envelope signal for that track. If, at the end of the test, an envelope is not detected for any track, a fault is reported. The gain determined for each track is compared to corresponding gain value stored in the back-up memory (determined by test 31). If the difference for any track is such, that it causes an amplitude difference of 0.8 volts, a fault is reported. All CE options are available for the test.

The same operation is carried out for 75 ips.

TEST OPTIONS:

00 = Halt if read or write errors exceed limits specified, halt on completion of test (Default option).
01 = Loop on test, halt if read or write errors exceed limit specified on any given pass.
02 = Loop on test, bypass read or write error halts.

NOTE

Option of halting or bypassing errors only exists for read/write type errors; all other errors will cause test to halt, with appropriate fault code displayed, regardless of the option selected.

CE TEST 30: (Cont'd)

TEST SEQUENCE:

a. Check if the operator door is closed, tape is not write protected, tape is loaded and not at EOT.

b. Calculate the minimum read gain values for all tracks for 25 ips as described.

c. Display fault code 01 if an envelope is not detected in track at the end of the test.

d. Display fault code 02 if the difference in gain, between that determined and the corresponding value stored in the back-up memory for any track, is such that it causes an amplitude difference of 0.8 volts.

e. Execute steps b, c, and d for 75 ips.

f. Display termination code 00 if complete test is successful.

POSSIBLE DIAGNOSTIC CODES:

00 - Test is successful
Fault Codes
01 - EGC envelope fault
02 - EGC wear tolerance fault
10 thru 69 - Refer to Structured Analysis Method (SAM)
Termination Codes
70 - Tape not loaded fault
72 - Tape write protected fault
77 - EOT on EGC fault

NOTE

CE Test 30 is a part of operator test 1.

## CE TEST 31: SET UP AND CHECK READ AMPLITUDES AT 25 AND 75 IPS

TEST REQUIREMENT: Execute this test with a Graham Epoch 480 or equivalent tape. Tape must be loaded and not write-protected. If a 2400 foot reel of magnetic tape is mounted, move tape to mid-position (equal tape on both reels). CE Test 44 can be used to move tape. If a 1200 foot reel of magnetic tape is used, the full reel (near BOT) can be used for this test. Jumper on the servo-control PWA back-up memory must be in 1-2 position. After completing the test, replace the jumper on the servo-control PWA back-up memory from the 1-2 position to the 2-3 position before powering down the STU.

TEST DESCRIPTION: Test 31 sets up and checks read amplitudes at 25 and 75 ips. At 25 ips, it determines the minimum gain value for each track, in the same manner as described in test 30, and stores them in the back-up memory. It again determines the minimum gain value for each track and compares it to the previously stored value. If the difference in gain between the two values for any track is such that it causes an amplitude difference of 0.1 volts, the test is repeated. Also, if any fault is detected while determining the minimum gain values, the test is repeated. If, after 5 attempts, the operation is not successful, a fault is reported.

The same operation is carried out at 75 ips.

TEST OPTIONS: None. (Loop-on-test option is not permitted with this test.)

TEST SEQUENCE:

a. Check if the operator door is closed, tape is not write protected, tape is loaded, and tape is not at EOT.

b. Determine the minimum gain values for 25 ips and store them in the back-up memory. Report a fault if the jumper on the servo-control PWA back-up memory is not in the 1-2 position.

CE TEST 31: (Cont'd)

c. Determine the minimum gain values for 25 ips and compare them with the previously stored values. If, for any track, the difference is such that it causes an amplitude difference greater than 0.1 volts, the test is repeated.

d. If, while determining the minimum gain values in steps b and c, a fault is detected, the test is repeated.

e. If, after five tries, the test is still not successful, terminate the test with termination code 78.

f. Execute steps b, c, and d for 75 ips. If test is not successful after five tries, display termination code 79.

g. Display termination code 00 if complete test is successful.

POSSIBLE DIAGNOSTIC CODES:

00 - Test is successful
Fault Codes
10 thru 69 - Refer to Structured Analysis Method (SAM)
Termination Codes
70 - Tape not loaded fault
72 - Tape write protected fault
74 - Back-up memory not enabled
78 - EGC low speed set-up failure *
79 - EGC high speed set-up failure *
80 - EGC low speed GCR set-up failure *
81 - EGC high speed GCR set-up failure *
99 - Attempt to loop on test

* Run test 01 to determine source of failure.

CE TEST 32: CHECK READ AMPLITUDES AT 25 AND 75 IPS

TEST REQUIREMENT: Tape must be loaded and pre-written with all 1's, and must not be near EOT.

TEST DESCRIPTION: Test 32 checks that read amplitudes at 25 and 75 ips are 1.5 ± 0.3 volts, with pre-written tape of all 1's. This test is similar to test 30 except that it requires pre-written tape and the tolerance value is ± 0.3 volts instead of 0.8 volts. All CE options are available for the test.

TEST OPTIONS:
- 00 = Halt if read or write errors exceed limits specified, halt on completion of test (Default option).
- 01 = Loop on test, halt if read or write errors exceed limit specified on any given pass.
- 02 = Loop on test, bypass read or write error halts.

NOTE

Option of halting or bypassing errors exists only for read/write type errors; all other errors cause test to halt and display appropriate fault code regardless of the option selected.

POSSIBLE DIAGNOSTIC CODES:

00 - Test is successful
Fault Codes
01 - EGC envelope fault
02 - EGC wear tolerance fault
10 thru 69 - Refer to Structured Analysis Method (SAM)
Termination Codes
70 - Tape not loaded fault
77 - EOT on EGC fault

## CE TEST 33: SET UP READ AMPLITUDES AT 25 IPS

TEST REQUIREMENT: Tape must be loaded and not write protected, and must not be near EOT. Jumper on the servo-control PWA back-up memory must be in the 1-2 position. After completing the test, replace the jumper on the servo-control PWA back-up memory from the 1-2 position to the 2-3 position before powering down the STU.

TEST DESCRIPTION: Test 33 determines and stores the read gains at 25 ips. This test is similar to Test 31 except it is done only at 25 ips, and whenever a fault is detected, the test is terminated and the fault is reported.

TEST OPTIONS: None. (Loop-on-test option is not permitted with this test.)

POSSIBLE DIAGNOSTIC CODES:

00 - Test is successful
Fault Codes
01 - EGC envelope fault
10 thru 69 - Refer to Structured Analysis Method (SAM)
Termination Codes
70 - Tape not loaded fault
72 - Tape write protected fault
73, 74 - Back up memory not write enabled
75, 76 - Bad back up memory
77 - EOT on EGC fault
99 - Attempt to loop on test

CE TEST 34: SET UP READ AMPLITUDES AT 75 IPS

TEST REQUIREMENT: Tape must be loaded and not write protected, and must not be near EOT. Jumper on the servo-control PWA back-up memory must be in the 1-2 position. After completing the test, replace the jumper on the servo-control PWA back-up memory from the 1-2 position to the 2-3 position before powering down the STU.

TEST DESCRIPTION: Test 34 determines and stores the read gains at 75 ips. This test is similar to test 31 except it is done only at 75 ips, and whenever a fault is detected, the test is terminated and the fault is reported.

TEST OPTIONS: None. (Loop on test is not permitted with this test.)

POSSIBLE DIAGNOSTIC CODES:

00 - Test is successful
Fault Codes
01 - EGC envelope fault
10 thru 69 - Refer to Structured Analysis Method (SAM)
Termination Codes
70 - Tape not loaded fault
72 - Tape write protected fault
73, 74 - Back up memory not write enabled
75, 76 - Bad back up memory
77 - EOT on EGC fault
99 - Attempt to loop on test

## CE TEST 37: SET UP VELOCITY CORRECTION MULTIPLIER

TEST REQUIREMENT: Tape must not be threaded. Jumper on the servo-control PWA back-up memory must be in the 1-2 position. After completing the test, replace the jumpers on the servo-control PWA back-up memory from the 1-2 position to the 2-3 position before powering down the STU.

TEST DESCRIPTION: Test 37 sets up the velocity correction multiplier for the velocity DAC.

NOTE

Execution of test 37 affects tests 48, 50, 81 and 84 as follows:

Test 48 (Enabled Compressor Power-Down Timer) - Disabled.
Test 50 (Enable Power-On Auto-Load) - Disabled.
Test 81 (Select Early EOT Point) - Set at 50 feet.
Test 84 (Select/Examine STU Options) - All option bits cleared to 0 (buffered enhanced I/F only).

Before executing test 37, make a record of the status of tests 48, 50, 81 and 84 so that you can restore the original option selection.

TEST OPTIONS: None. (Loop on test is not permitted with this test.)

TEST SEQUENCE:

a. Check if the operator door is closed and tape is absent.

b. Move take-up reel forward at about 19 ips velocity (for BOT radius).

c. Calculate velocity correction multiplier for velocity DAC.

d. Display termination code 93 if velocity correction multiplier is out of range.

CE TEST 37: (Cont'd)

e. Stop take-up reel and store velocity correction multiplier in back-up memory.

f. Display termination code 00 if complete test is successful.

POSSIBLE DIAGNOSTIC CODES:

00 - Test is successful
Fault Codes
10 thru 69 - Refer to Structured Analysis Method (SAM)
Termination Codes
73, 74 - Back up memory not write enabled
75, 76 - Bad back up memory
93 - Velocity correction multiplier factor out of range
94 - Tape threaded fault
99 - Attempt to loop on test

## CE TEST 38: PULSE FILE REEL AT 8 OUNCES

TEST REQUIREMENT: Tape (10.5 inch reel) must be threaded close to BOT without any loop.

TEST DESCRIPTION: This test puts the take-up reel in stoplock. It pulses the file reel in the reverse direction to maintain approximately 8 ounces of tension. Manual intervention is required to terminate the test.

TEST OPTIONS: None.

TEST SEQUENCE:

a. Check if the operator door is closed and tape is present.

b. Put take-up reel in Stoplock.

c. Turn on pump.

d. Pulse the file reel.

POSSIBLE DIAGNOSTIC CODES:

Fault Codes
10 thru 69 - Refer to Structured Analysis Method (SAM)
Termination Codes
71 - Tape loaded fault

## CE TEST 39: WRITE OPTION PATTERN IN PE MODE TO EOT AT 25 IPS

TEST REQUIREMENT: Tape must be loaded and not write protected.

TEST DESCRIPTION: Test 39 writes tape with option pattern in PE mode at 25 ips to EOT. At EOT, tape is rewound to BOT. Pattern options are available for the test.

TEST OPTIONS:
00 = All ones pattern
01 = One-half frequency pattern

TEST SEQUENCE:

a. Check if the operator door is closed.

b. Check if tape is loaded and not write protected.

c. Write option pattern in PE mode to EOT at 25 ips.

d. Rewind to BOT.

e. Repeat test from step c.

POSSIBLE DIAGNOSTIC CODES:

Fault Codes
10 thru 69 - Refer to Structured Analysis Method (SAM)
Termination Codes
70 - Tape not loaded fault
72 - Tape write protected fault

CE TEST 40: WRITE OPTION PATTERN IN PE MODE TO EOT AT 75 IPS

TEST REQUIREMENT: Tape must be loaded and not write protected.

TEST DESCRIPTION: Test 40 writes tape with option pattern in PE mode at 75 ips to EOT. At EOT, it is rewound to BOT. Pattern options are available for the test.

TEST OPTIONS:
00 = All ones pattern
01 = One-half frequency pattern

TEST SEQUENCE:

a. Check if the operator door is closed.

b. Check if tape is loaded and not write protected.

c. Write option pattern in PE mode to EOT at 75 ips.

d. Rewind to BOT.

e. Repeat test from step c.

POSSIBLE DIAGNOSTIC CODES:

Fault Codes
10 thru 69 - Refer to Structured Analysis Method (SAM)
Termination Codes
70 - Tape not loaded fault
72 - Tape write protected fault

## CE TEST 41: STOPLOCK TAKE-UP REEL

TEST REQUIREMENT: Tape must not be loaded.

TEST DESCRIPTION: Test 41 checks the stoplock mode of the take-up reel servo. Manual intervention is required to terminate the test.

TEST OPTIONS: None.

TEST SEQUENCE:

a. Check if the operator door is closed.
b. Put take-up reel servo in stoplock mode.

POSSIBLE DIAGNOSTIC CODES:

Fault Codes
10 thru 69 - Refer to Structured Analysis Method (SAM)
Termination Codes
71 - Tape loaded fault

CE TEST 42: ENABLE TENSION SERVO

TEST REQUIREMENT: Tape must be threaded. Tape slack must be removed to allow file servo to be enabled.

TEST DESCRIPTION: Test 42 allows tape tension to be checked via the tension servo. It produces 8 ounces of tension by enabling tension servo.

TEST OPTIONS: None.

TEST SEQUENCE:

a. Check if the operator door is closed. If tape is absent, go to step d.

b. Take up slack in tape by slowly moving take-up reel in reverse direction until tension is reached.

c. Enable tension servo operation at 8 ounces.

d. If tape is pulled out of tape path, display termination code 00.

POSSIBLE DIAGNOSTIC CODES:

00 - Test is successful
Fault Codes
10 thru 69 - Refer to Structured Analysis Method (SAM)
Termination Codes
71 - Tape loaded fault

CE TEST 43: TURN ON PUMP

TEST REQUIREMENT: Tape must not be loaded.

TEST DESCRIPTION: Test 43 turns on the pump. Manual intervention is required to terminate test.

TEST OPTIONS: None.

TEST SEQUENCE:

a. Check if the operator door is closed and tape is not loaded.

b. Turn on pump.

POSSIBLE DIAGNOSTIC CODES:

Fault Codes
10 thru 69 - Refer to Structured Analysis Method (SAM)
Termination Codes
71 - Tape loaded fault

## CE TEST 44: FAST FORWARD TO EOT

TEST REQUIREMENT: Tape must be loaded.

TEST DESCRIPTION: Test 44 moves tape forward at rewind speed to EOT.

TEST OPTIONS: None.

TEST SEQUENCE:

a. Check if the operator door is closed and tape is loaded.

b. Gradually increase speed and then maintain rewind speed.

c. Wait until EOT is detected.

d. Stop motion and display termination code 00.

POSSIBLE DIAGNOSTIC CODES:

00 - Test is successful
Fault Codes
10 thru 69 - Refer to Structured Analysis Method (SAM)
Termination Codes
70 - Tape not loaded fault

## CE TEST 45: REFRESH DAC SCOPE LOOP

TEST REQUIREMENT: Tape must not be loaded.

TEST DESCRIPTION: Test 45 exercises the refresh DAC on the servo-control PWA. If refresh DAC is operational, a triangle waveform of 35 ms period will be observed on the scope. Manual termination is required to terminate the test.

TEST OPTIONS: None.

TEST SEQUENCE:

a. Check if the operator door is closed.

b. Output zero voltage at TP 14 through refresh DAC, and increase it by 20 mv at every 60 microseconds (approximate) until it reaches 5 volts.

c. Decrease output at refresh DAC by 20 mv at every 60 microseconds (approximate) until it reaches 0 volt.

d. Go to step b.

POSSIBLE DIAGNOSTIC CODES:

Fault Codes
10 thru 69 - Refer to Structured Analysis Method (SAM)
Termination Codes
71 - Tape loaded fault

CE TEST 46: VELOCITY DAC SCOPE LOOP

TEST REQUIREMENT: Tape must not be loaded.

TEST DESCRIPTION: Test 46 exercises the velocity DAC on the servo-control PWA. If velocity DAC is operational, a triangle waveform of 35 ms period will be observed on the scope. Manual termination is required to terminate the test.

TEST OPTIONS: None.

TEST SEQUENCE:

a. Check if the operator door is closed.

b. Output zero voltage at velocity DAC, and increase it by 20 mv at every 60 microseconds (approximate) until it reaches 6.9 volts.

c. Decrease output at velocity DAC by 20 mv at every 60 microseconds (approximate) until it reaches 0 volt.

d. Go to step b.

POSSIBLE DIAGNOSTIC CODES:

Fault Codes
10 thru 69 - Refer to Structured Analysis Method (SAM)
Termination Codes
71 - Tape loaded fault

## CE TEST 47: SERVO-CONTROL MICROPROCESSOR OUTPUTS SCOPE LOOP

TEST REQUIREMENT: Tape must not be present.

TEST DESCRIPTION: Test 47 generates a pulse of 50 microseconds every 5 ms on each of the addressable outputs of the servo-control PWA. Manual intervention is required to terminate the test.

TEST OPTIONS: None.

TEST SEQUENCE:

a. Check if the operator door is closed and tape is not present.

b. Generate a 50 microsecond pulse every 5 ms on each of the addressable outputs of servo-control microprocessor.

POSSIBLE DIAGNOSTIC CODES:

Fault Codes
10 thru 69 - Refer to Structured Analysis Method (SAM)
Termination Codes
94 - Tape present fault

## CE TEST 48: ENABLE COMPRESSOR POWER-DOWN TIMER

TEST REQUIREMENT: Tape must be unloaded. Jumper W1 on backup memory (on servo-control PWA) must be in the 1-2 (STORE ENABLE) position. After completing the test return jumper W1 to the 2-3 (STORE DISABLE) position before powering off the transport.

TEST DESCRIPTION: Test 48 sets up the compressor power-down timer for one minute if no tape motion has occurred.

TEST OPTIONS: None.

POSSIBLE DIAGNOSTIC CODES:

00 - Test is successful
Termination Codes
73,74 - Backup memory is not store enabled
75,76 - Bad backup memory
94 - Tape present fault
99 - Illegal remote test

NOTE

To disable compressor power-down timer, run CE test 37.

CE TEST 50: ENABLE POWER-ON AUTO LOAD

TEST REQUIREMENT: Tape must be unloaded. Jumper W1 on backup memory (on servo-control PWA at location D23) must be in the 1-2 (STORE ENABLE) position. After completing the test return jumper W1 to the 2-3 (STORE DISABLE) position before powering off the transport.

DO NOT USE TEST 50 on units with buffered Pertec enhanced or buffered STC enhanced interface PWA's. Auto Load feature will not operate. Use Test 84 to enable Auto Load feature.

TEST DESCRIPTION: Test 50 enables the automatic loading of a properly threaded reel of tape after the drive successfully completes the power on health checks.

TEST OPTIONS: None.

POSSIBLE DIAGNOSTIC CODES:

00 - Test is successful
Termination Codes
71 - Tape loaded fault
73,74 - Backup memory is not store enabled
75,76 - Bad backup memory
99 - Illegal remote test

NOTE

To disable the power-on auto load, run CE Test 37.

## CE TEST 52: WRITE OPTION PATTERN IN GCR MODE TO EOT AT 25 IPS

TEST REQUIREMENT: Tape must be loaded and not write protected.

TEST DESCRIPTION: Test 52 writes tape with option pattern in GCR mode at 25 ips to EOT. At EOT, tape is rewound to BOT. Pattern options are available for the test.

TEST OPTIONS:
00 = All ones pattern
01 = One-half frequency pattern
02 = One-third frequency pattern

TEST SEQUENCE:

a. Check if the operator door is closed.

b. Check if tape is loaded and not write protected.

c. WRITE option pattern in GCR mode to EOT at 25 ips.

d. REWIND to BOT.

e. Repeat test from step c.

POSSIBLE DIAGNOSTIC CODES:

Fault Codes
10 thru 69 - Refer to Structured Analysis Method (SAM)
Termination Codes
70 - Tape not loaded fault
72 - Tape write protected fault

CE TEST 53: WRITE OPTION PATTERN IN GCR MODE TO EOT AT 75 IPS

TEST REQUIREMENT: Tape must be loaded and not write protected.

TEST DESCRIPTION: Test 53 writes tape with option pattern in GCR mode at 75 ips to EOT. At EOT, it is rewound to BOT. Pattern options are available for the test.

TEST OPTIONS:
00 = All ones pattern
01 = One-half frequency pattern
02 = One-third frequency pattern

TEST SEQUENCE:

a. Check if the operator door is closed.

b. Check if tape is loaded and not write protected.

c. WRITE option pattern in GCR mode to EOT at 75 ips.

d. REWIND to BOT.

e. Repeat test from step c.

POSSIBLE DIAGNOSTIC CODES:

Fault Codes
10 thru 69 - Refer to Structured Analysis Method (SAM)
Termination Codes
70 - Tape not loaded fault
72 - Tape write protected fault

CE TEST 54: CHANGE/EXAMINE WRITE CURRENT VALUES

NOTE

Use this test to change/examine write current values only if a write current label is attached to the magnetic head. If there is no write current label attached to the magnetic head, use test 64.

TEST REQUIREMENT:

a. To change any of the write current values, move W1 jumper on Servo-Control PWA to position 1-2.

b. To examine (not change) write current value, no setup is necessary.

TEST DESCRIPTION: CE test 54 allows the changing or examining of the four write current values currently stored in backup memory.

TEST OPTIONS: None.

TEST SEQUENCE:

a. Enter CE test 54 and press EXEC switch.

b. The display now shows the first write current value currently stored in backup memory (see figure 6-5 for hex value of symbols shown on display). Using the STEP switch, enter the first value from the read/write head tag and press EXEC switch. The first value has been entered and the display now shows the second write current value currently stored in backup memory. Enter the second value from the read/write head tag and press EXEC switch. Continue until all four write current values are entered.

c. Press RESET switch.

d. Verify the proper entering the new write current values by re-running CE test 54. If displayed value is correct, press EXEC switch to display the next value; otherwise, enter new value and press EXEC switch.

e. Press RESET switch.

CE TEST 54: (Cont'd)

POSSIBLE DIAGNOSTIC CODES:

00 - Test is successful
Fault Codes
10 thru 69 - Refer to Structured Analysis Method (SAM)
Termination Codes
73, 74 - Backup memory jumper (W1) not in the 1-2 position
75, 76 - Bad backup memory

NOTE

If jumper W1 was moved to the 1-2 position to allow changing of the write current values, return W1 to the 2-3 position before powering down transport.

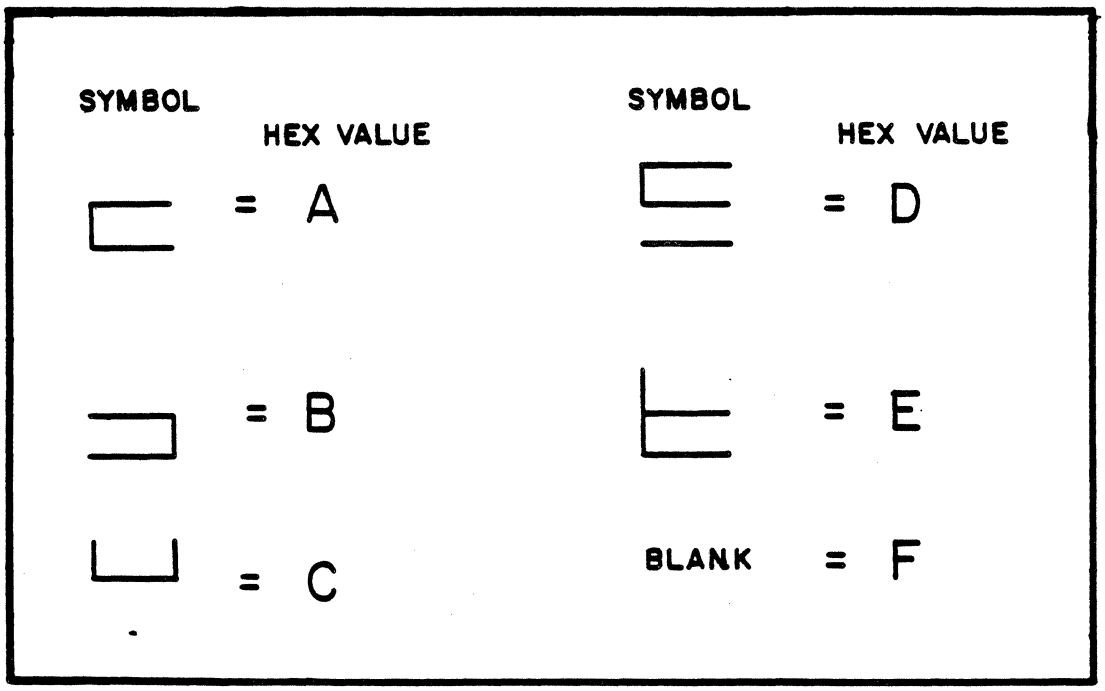


Figure 6-5. Test 54 Hex Symbols

## CE TEST 55: DRIVE INTERNAL DIAGNOSTIC

TEST REQUIREMENT: A tape must not be loaded.

TEST DESCRIPTION: Test 55 checks out the internal hardware of the drive.

TEST OPTIONS:
- 00 = Halt if read or write errors exceed limits specified, halt on completion of test (Default option).
- 01 = Loop on test, halt if read or write errors exceed limit specified on any given pass.
- 02 = Loop on test, bypass read or write error halts.

NOTE

Option of halting or bypassing errors applies only to read/write type errors; all other errors cause test to halt, with appropriate fault code displayed, regardless of the option selected.

TEST SEQUENCE:

a. Check if the tape is not loaded.

b. Check the drive functional PROM checksum.

c. Check the drive diagnostic PROM checksum.

d. Check the programmable timer #1.

e. Check the programmable timer #2.

POSSIBLE DIAGNOSTIC CODES:

00 - Test is successful
Fault Codes
10 thru 69 - Refer to Structured Analysis Method (SAM)

## CE TEST 56: FORMATTER INTERNAL DIAGNOSTIC

TEST REQUIREMENT: None.

TEST DESCRIPTION: Test 56 checks out the internal hardware of the formatter. It does not check adapter interface or device interface hardware.

TEST OPTIONS:

00 = Halt if read or write errors exceed limits specified, halt on completion of test (Default option).
01 = Loop on test, halt if read or write errors exceed limit specified on any given pass.
02 = Loop on test, bypass read or write error halts.

NOTE

Option of halting or bypassing errors applies only to read/write type errors; all other errors cause test to halt, with appropriate fault code displayed, regardless of the option selected.

TEST SEQUENCE:

a. Check out write hardware.

b. Check out read/write interface hardware.

c. Check out read hardware.

d. Check out hardware used to write or read a data block.

e. Check out VFOs for both speeds and densities.

POSSIBLE DIAGNOSTIC CODES:

00 - Test is successful
Fault Codes
56 - Formatter/Drive communication fault
62 - Formatter write board health check fault
63 - Formatter read/write interface health check fault
64 - Formatter read PWA health check fault in data loopback
65 - Formatter read PWA health check fault

## CE TEST 57: INTERFACE INTERNAL DIAGNOSTIC

TEST REQUIREMENT: None.

TEST DESCRIPTION: Test 57 checks out the internal hardware of the interface PWA. It does not check the interface between itself and the formatter.

TEST OPTIONS:
- 00 = Halt if read or write errors exceed limits specified, halt on completion of test (Default option).
- 01 = Loop on test, halt if read or write errors exceed limit specified on any given pass.
- 02 = Loop on test, bypass read or write error halts.

NOTE

Option of halting or bypassing errors applies only to read/write type errors; all other errors cause test to halt, with appropriate fault code displayed, regardless of the option selected.

Wait at least 20 seconds after test 57 is over before placing the STU on-line.

TEST SEQUENCE:

a. Check the PROM checksum.

b. Check out internal hardware.

POSSIBLE DIAGNOSTIC CODES:

00 - Test is successful
Fault Codes
56 - Formatter/Drive communication fault
59 - Interface Adapter fault (SCSI interface only)
66 - Formatter/Interface communication fault
67 - Interface health check fault
68 - Interface checksum fault

CE TEST 58: LOOP WRITE-TO-READ THRU DRIVE INTERFACE

TEST REQUIREMENT: None.

TEST DESCRIPTION: Test 58 loops data through the drive interface. The formatter writes 2K byte records, incrementing data patterns for each speed and density.

TEST OPTIONS:
- 00 = Halt if read or write errors exceed limits specified, halt on completion of test (default option).
- 01 = Loop on test, halt if read or write errors exceed limit specified on any given pass.
- 02 = Loop on test, bypass read or write error halts.

NOTE

Option of halting or bypassing errors applies only to read/write type errors; all other errors cause test to halt, with appropriate fault code displayed, regardless of the option selected.

TEST SEQUENCE:

a. WRITE 10 records in low speed PE mode.

b. WRITE 10 records in high speed PE mode.

c. WRITE 10 records in low speed GCR mode.

d. WRITE 10 records in high speed GCR mode.

POSSIBLE DIAGNOSTIC CODES:

00 - Test is successful
Fault Codes
04 - Low speed write error
06 - High speed write error
09 - Hardware failure
56 - Formatter/Drive communication fault

CE TEST 59: LOOP WRITE-TO-READ THRU READ/WRITE

TEST REQUIREMENT: Tape must be unthreaded.

TEST DESCRIPTION: Test 59 loops data through the read/write in the drive. The formatter writes 2K byte records, incrementing data patterns for low speed GCR mode only.

TEST OPTIONS:
- 00 = Halt if read or write errors exceed limits specified, halt on completion of test (default option).
- 01 = Loop on test, halt if read or write errors exceed limit specified on any given pass.
- 02 = Loop on test, bypass read or write error halts.

NOTE

Option of halting or bypassing errors applies only to read/write type errors; all other errors cause test to halt, with appropriate fault code displayed, regardless of the option selected.

TEST SEQUENCE:

a. WRITE 10 records in low speed GCR mode.

POSSIBLE DIAGNOSTIC CODES:

00 - Test is successful
Fault Codes
04 - Low speed write error
09 - Hardware failure
56 - Formatter/Drive communication fault

## CE TEST 60: LOOP WRITE-TO-READ THRU FORMATTER

TEST REQUIREMENT: None.

TEST DESCRIPTION: Test 60 loops data through the formatter. The formatter writes 2K byte records, incrementing data patterns for each speed and density.

TEST OPTIONS:

00 = Halt if read or write errors exceed limits specified, halt on completion of test (default option).
01 = Loop on test, halt if read or write errors exceed limit specified on any given pass.
02 = Loop on test, bypass read or write error halts.

NOTE

Option of halting or bypassing errors applies only to read/write type errors; all other errors cause test to halt, with appropriate fault code displayed, regardless of the option selected.

TEST SEQUENCE:

a. WRITE 10 records in low speed PE mode.

b. WRITE 10 records in high speed PE mode.

c. WRITE 10 records in low speed GCR mode.

d. WRITE 10 records in high speed GCR mode.

POSSIBLE DIAGNOSTIC CODES:

00 - Test is successful
Fault Codes
04 - Low speed write error
06 - High speed write error
09 - Hardware failure
Termination Codes
56 - Formatter/Drive communication fault

## CE TEST 61: TAKE-UP MOTOR AND POWER AMP FULL CAPABILITY DETECTION TEST

TEST REQUIREMENT: Tape must not be threaded.

TEST DESCRIPTION: Test 61 checks out whether take-up motor performance is within range. It also checks out whether take-up section of the power amp is capable of delivering full current.

TEST OPTIONS: None.

TEST SEQUENCE:

a. Check if the operator door is closed and tape is absent.

b. Apply diagnostic lines to move take-up motor in forward direction from 0 to 75 ips, and measure time it requires to ramp-up. Stop take-up motor.

c. Calculate motor constant from this data.

d. If motor constant is within range, go to step e. If motor constant is out of range the first time, repeat steps b and c. Otherwise, display termination code 84.

e. Apply full current to move take-up motor in forward direction from 0 to 75 ips, and measure time it requires to ramp-up. Stop take-up motor.

f. If power amp is not capable of delivering full current in forward direction, flag a fault; otherwise, go to step h.

g. If fault is the first time, repeat steps e and f, otherwise, display termination code 82.

h. Apply full current to move take-up motor in reverse direction from 0 to 75 ips, and measure time it requires to ramp-up. Stop take-up motor.

i. If power amp is not capable of delivering full current in reverse direction, flag a fault; otherwise, go to step k.

j. If fault is the first time, repeat steps h and i, otherwise, display termination code 82.

k. Display termination code 00 to indicate successful completion of test.

CE TEST 61: (Cont'd)

POSSIBLE DIAGNOSTIC CODES:

00 - Test is successful
Fault Codes
10 thru 69 - Refer to Structured Analysis Method (SAM)
Termination Codes
82 - Take-Up power amp fault
84 - Take-up motor/tach fault
94 - Tape threaded fault

## CE TEST 62: TAKE-UP FINE TACH FAULT DETECTION

TEST REQUIREMENT: Tape must not be threaded.

TEST DESCRIPTION: Test 62 checks that the distance between two consecutive quarter tachs (derived from fine line tachs at the take-up motor) is within tolerable limits.

TEST OPTIONS: None.

TEST SEQUENCE:

a. Check if the operator door is closed and tape is absent.

b. Ramp up to 4 ips.

c. Check if distance between two consecutive quarter tachs is within tolerable limits.

d. If, after five tries, at least once, the distance between two consecutive quarter tachs is within limits, go to step f.

e. Display termination code 96.

f. Check that the distance between all consecutive quarter tachs is within tolerable limits.

g. If distance between any two consecutive quarter tachs is not within limits, report fault, otherwise, go to step i.

h. Repeat steps e and f. If the error is detected five times, display termination code 84.

i. Display termination code 00 to indicate successful completion of test.

POSSIBLE DIAGNOSTIC CODES:

00 - Test is successful
Fault Codes
10 thru 69 - Refer to Structured Analysis Method (SAM)
Termination Codes
84 - Take-Up motor/tach fault
94 - Tape threaded fault
95 - Formatter interrupt received while test in progress.
96 - Servo loop fault

## CE TEST 64: AUTO-WRITE CURRENT LEVEL ADJUSTMENT

NOTE

If a write current label is attached to the magnetic head, use test 54 to change/examine write current levels. Do not use this test.

TEST REQUIREMENT: Execute this test with a Graham Epoch 480 tape (or the most frequently used tape at the site) with a minimum accumulation of 10 full reel passes on a transport. Discard a tape showing signs of oxide breakdown (identifiable by contamination of magnetic head).

Clean the magnetic head.

Load a qualified, write-enabled, 2400-foot reel of tape.

Move jumper W-1 on the servo-control PWA to the 1-2 position.

TEST DESCRIPTION: Test 64 determines the optimum write current level for all 9 tracks. The write current levels are determined for 25 ips PE, 25 ips GCR, 75 ips PE, and 75 ips GCR. The values are stored in backup memory.

TEST OPTIONS: None.

TEST SEQUENCE:

a. Enter test 64. Press EXECUTE switch.

b. Test runs to completion.

c. Execute test 31.

d. Before turning power off, move jumper W-1 on the servo-control PWA to the 2-3 position.

CE TEST 64: (Cont'd)

POSSIBLE DIAGNOSTIC CODES:

00 - Test is successful
Fault Codes
01 - Read envelope fault
10 thru 69 - Refer to Structured Analysis Method (SAM)
Termination Codes
70 - Tape not loaded fault
72 - Tape write protected fault
73, 74 - Backup memory jumper (W-1 not in 1-2 position)
75, 76 - Bad backup memory
77 - Not enough tape to complete test
80 - PE 25 ips setup fault *
81 - PE 75 ips setup fault *
82 - GCR 25 ips setup fault *
83 - GCR 75 ips setup fault *
87 - Write currents inconsistent fault
88 - Optimized write current exceeds maximum

* Run test 01 to determine source of failure.

CE TEST 80: RETAIN TAPE POSITION ON POWER-DOWN

TEST REQUIREMENT: Tape must be loaded and positioned at least 10 feet beyond BOT and at least 10 feet before EOT. Reels must not be moved after power-down.

TEST DESCRIPTION: Test 80 calculates and stores in memory the tape position values prior to power-down. On power-up, tape is returned to reference position.

TEST SEQUENCE:

a. Check if tape is loaded.

b. Save tape radius and drive status information.

c. Establish tape reference point for power-up.

d. Remove power from take-up and supply motors.

e. Disable all operator control panel switches except OFF.

f. OFF switch is pressed. (The circuit breaker may be placed in the OFF (0) position and the ac power cord unplugged.)

g. Drive is powered on.

h. Tape is positioned at reference point within ± 3 inches.

i. Drive may be placed ON-LINE.

POSSIBLE DIAGNOSTIC CODES:

00 - Test is successful
Fault Codes
10 thru 69 - Refer to Structured Analysis Method (SAM)
Termination Codes
73 - Tape is positioned in leader or trailer
75, 76 - Bad back-up memory
78 - Tape too close to BOT

CE TEST 81: SELECT EARLY EOT POINT

TEST REQUIREMENT: Interface PWA must be buffered version or buffered enhanced version.

TEST DESCRIPTION: Test 81 selects the distance between early EOT and EOT marker. Default value is 50 feet. The host may elect to act on either early EOT or EOT.

TEST OPTIONS:
00 - 50 feet
01 - 100 feet
02 - 150 feet
03 - 200 feet
04 - 250 feet
05 - 300 feet
06 - 350 feet
07 - 400 feet
08 - 450 feet
09 - 500 feet
0A - 20 feet

TEST SEQUENCE

a. Store options selected in back-up memory.

POSSIBLE DIAGNOSTIC CODES:

00 - Test is successful
Fault Codes
10 thru 69 - Refer to Structured Analysis Method (SAM)
Termination Codes
75, 76 - Bad back-up memory

CE TEST 84 (BPEI): SELECT/EXAMINE STU OPTIONS

NOTE

Test 84, buffered Pertec enhanced interface (BPEI) includes only the options available with buffered Pertec enhanced interface. For a description of the options available with the buffered STC enhanced interface, refer to the next test, Test 84 (BSTCEI).

TEST REQUIREMENT: Interface PWA must be buffered Pertec enhanced version. Tape must not be loaded.

TEST DESCRIPTION: Test 84 allows the examining or changing of STU options.

TEST OPTIONS: None.

TEST SEQUENCE

a. To examine options:

1. Enter CE test 84.
2. Press and hold EXECUTE switch. Display = 01 (byte 1).
3. Release EXECUTE switch. Display = value stored in byte 1.
4. Press and hold EXECUTE switch. Display = 02 (byte 2).
5. Release EXECUTE switch. Display = value stored in byte 2.

This sequence may be continued through byte 8. If no selections have been entered in a byte, display = 80 (most significant bit = 1, all others = 0).

b. To select or change options:

1. Enter CE test 84. Press and release EXECUTE switch until display = desired byte number. (Refer to option definition below.)

2. Use STEP and TEST switches to enter the value desired in the display.

3. Press EXECUTE switch. (When EXECUTE switch is released, display = next byte number.)

4. Power-down the STU to ensure transfer of option values into the interface PWA.

CE TEST 84 (BPEI): (Cont'd)

OPTION BIT DEFINITION:

Eight bytes of an EEPROM are used to store option selections. The left digit on the operator panel indicates in hex the value of bits 0 thru 3; the right digit indicates the value in hex of bits 4 thru 7 (see table 6-20). Execution of test 37 clears all the option bits (bits 1 thru 7) to 0. Bit 0 of each byte is a flag bit indicating whether any option selections have been entered in the byte via the operator panel and test 84. If no option(s) have been entered, the display value of bit 0 is 1, and the display value of the byte is 80. After any option selection has been entered via the operator panel, the display value of the flag bit (bit 0) is 0.

OPTION BIT PRIORITIES:

The buffer enable option, transfer rate selection, write start delay selection, remote density select option, adaptive velocity control option, and auto-read error recovery option are selectable both by test 84 and by jumpers on the buffered Pertec enhanced interface PWA. The priority of the selections is as follows:

a. After test 37, which clears the option bits, and before any test 84 selection is entered, each byte display = 80. Under these conditions, the jumper selection prevails.

b. After one or more selections is made in a byte via the operator panel and test 84, the content of the entire byte prevails over the jumper selections.

c. For priorities in setting buffer mode or unbuffered mode, refer to figure 6-5A.

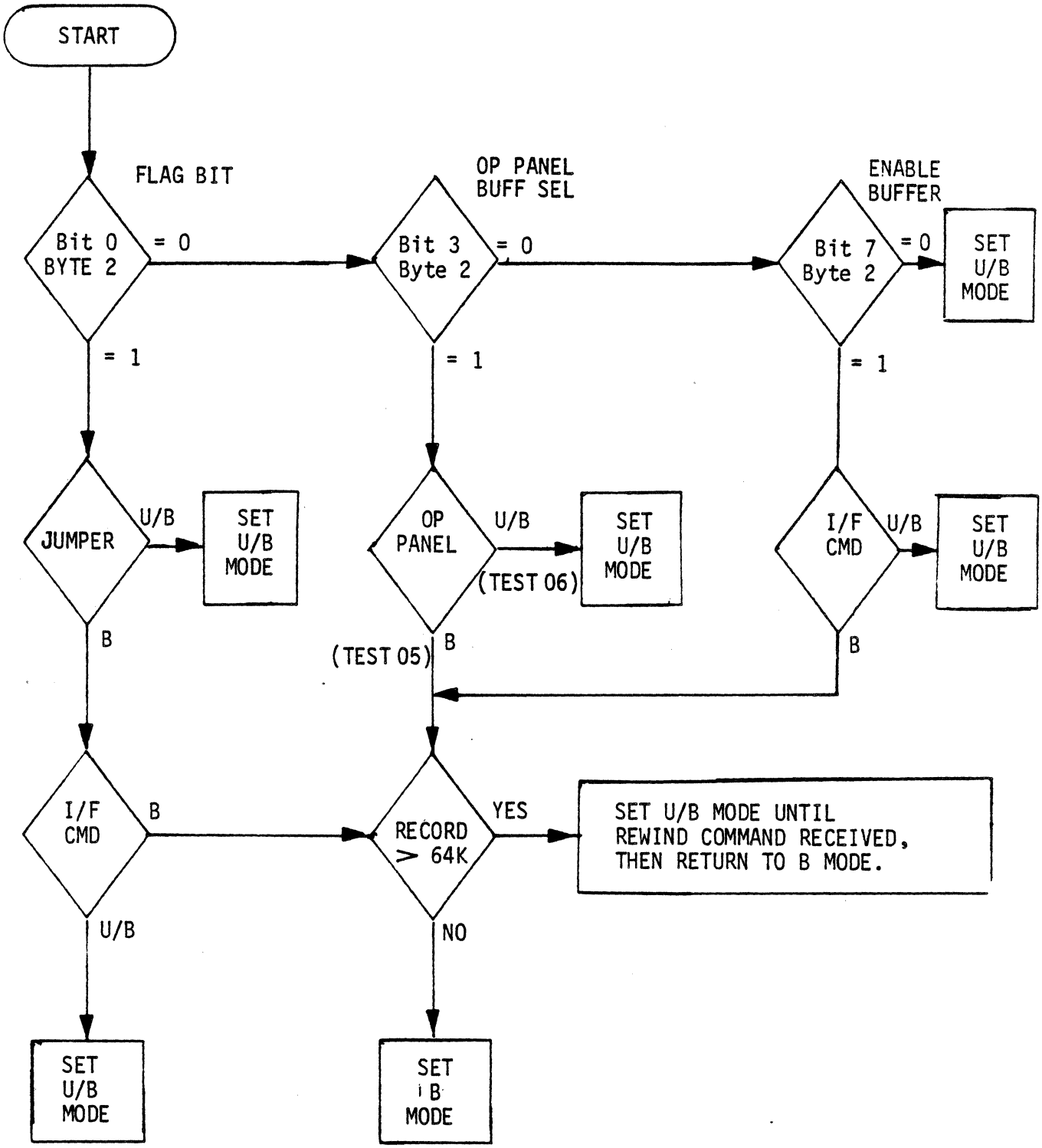


Figure 6-5A. Setting Buffered (B) or Unbuffered (U/B) Mode, Buffered Pertec Enhanced I/F

CE TEST 84 (BPEI): (Cont'd)

a. Byte 1

Bit 0 = 0 - Selections entered in byte
= 1 - No selections entered in byte

Bit 1 - Reserved

Bit 2 = 0 - When AVC disabled, force high speed (75 ips)
= 1 - When AVC disabled, force low speed (25 ips)

Bit 3 = 0 - Disable AVC operation
= 1 - Enable AVC operation

Bit 4 - Not used

Bit 5 = 0 - Enable density status indication on interface
= 1 - Interface always indicates PE status

Bit 6 = 0 - Enable local density selection (front panel switch)
= 1 - Enable remote density selection by interface

Bit 7 = 0 - READY (RDY) status independent of ON-LINE (ONL) status
= 1 - READY (RDY) status not generated until ON-LINE (ONL) status is true

CE TEST 84 (BPEI): (Cont'd)

b. Byte 2

Bit 0 = 0 - Selections entered in byte
= 1 - No selections entered in byte

Bit 1 - Not used

Bit 2 = 0 - Enable read strobes during read-after-write operation
= 1 - Disable read strobes during read-after-write operation

Bit 3 = 0 - Disable operator panel buffer selection
= 1 - Enable operator panel buffer selection
(Test 05 - Enable Buffer From Operator Panel)
(Test 06 - Disable Buffer From Operator Panel)

Bit 4 - Not used

Bit 5 = 0 - Disable perfect write
= 1 - Enable perfect write (no corrected errors allowed, buffered mode only)

Bit 6 = 0 - Disable read error recovery
= 1 - Enable read error recovery

Bit 7 = 0 - Disable buffer operation
= 1 - Enable buffer operation

CE TEST 84 (BPEI): (Cont'd)

c. Byte 3

Bit 0 = 0 - Selections entered in byte
= 1 - No selections entered in byte

Bits 1 thru 3 - Number of records allowed in buffer at Early EOT during Write.

| Bit 1 | Bit 2 | Bit 3 | No. of Records |
|---|---|---|---|
| *0 | 0 | 0 | 0 |
| 0 | 0 | 1 | 1 |
| 0 | 1 | 0 | 2 |
| 0 | 1 | 1 | 3 |
| 1 | 0 | 0 | 4 |
| 1 | 0 | 1 | 5 |
| 1 | 1 | 0 | 6 |
| 1 | 1 | 1 | 7 |

* If no bits are set, unit will go to unbuffered mode at Early EOT.

Bits 4 thru 7 - Transfer rate selection

| 4 | 5 | 6 | 7 | Display | kilobytes/second |
|---|---|---|---|---|---|
| 0 | 0 | 0 | 0 | 0 | 62.5 |
| 0 | 0 | 0 | 1 | 1 | 125 |
| 0 | 0 | 1 | 0 | 2 | 189 |
| 0 | 0 | 1 | 1 | 3 | 250 |
| 0 | 1 | 0 | 0 | 4 | 313 |
| 0 | 1 | 0 | 1 | 5 | 385 |
| 0 | 1 | 1 | 0 | 6 | 435 |
| 0 | 1 | 1 | 1 | 7 | 500 |
| 1 | 0 | 0 | 0 | 8 | 555 |
| 1 | 0 | 0 | 1 | 9 | 625 |
| 1 | 0 | 1 | 0 | ⊏ = A | 714 |
| 1 | 0 | 1 | 1 | ⊐ = B | 770 |
| 1 | 1 | 0 | 0 | ⊔ = C | 770 |
| 1 | 1 | 0 | 1 | ⊑ = D | 770 |
| 1 | 1 | 1 | 0 | ⊢ = E | 770 |
| 1 | 1 | 1 | 1 | BLANK = F | 770 |

CE TEST 84 (BPEI): (Cont'd)

d. Byte 4

Bit 0 = 0 - Selections entered in byte
= 1 - No selections entered in byte

Bits 1 thru 4 - Not used

Bits 5 thru 7 - Write start delay (pseudo ramp) selection

| Bit 5 | Bit 6 | Bit 7 | |
|---|---|---|---|
| 0 | 0 | 0 | 1 millisecond (default |
| 0 | 0 | 1 | 2 milliseconds |
| 0 | 1 | 0 | 3 milliseconds |
| 0 | 1 | 1 | 4 milliseconds |
| 1 | 0 | 0 | 5 milliseconds |
| 1 | 0 | 1 | 7 milliseconds |
| 1 | 1 | 0 | 10 milliseconds |
| 1 | 1 | 1 | 15 milliseconds |

e. Byte 5 02

Bit 0 = 0 - Selections entered in byte
= 1 - No selections entered in byte

Bit 1 - Not used

Bit 2 = 0 - Disable conversion of READ REVERSE command to BACKSPACE
= 1 - Enable conversion of READ REVERSE command to BACKSPACE

Bits 3 and 4 - Not used

Bit 5 = 0 - Normal load
= 1 - Auto load

Bit 6 = 0 - Standard panel display
= 1 - Display 40 when in unbuffered mode

Bit 7 = 0 - Standard panel display
= 1 - Display 62 for GCR mode, or 16 for PE mode

f. Bytes 6 thru 8 - Not assigned

Table 6-20. OPTION BYTES BPEI INTERFACE (STATUS WHEN BITS SET TO 1)

| | LEFT DISPLAY DIGIT | | | | RIGHT DISPLAY DIGIT | | | |
|---|---|---|---|---|---|---|---|---|
| BYTE | 0 | 1 | 2 | 3 | 4 | 5 | 6 | 7 |
| 1 | FLAG BIT | RESERVED | FORCE LO SPD WHEN AVC NOT ENABLED<br>ENABLED NOTE 1 | AVC<br>*ENABLED | | DENSITY STATUS ON I/F<br>*DISABLED | REMOTE DENSITY SELECT<br>#ENABLED | RDY = RDY·ONL<br>#ENABLED |
| 2 | FLAG BIT | | RD-AFTER-WR STROBES<br>DISABLED NOTE 1 | OP PANEL BUFFER SELECTION<br>ENABLED NOTE 1 | | PERFECT WRITE<br>ENABLED NOTE 1 | AUTO-RD ERROR RECOVERY<br>*ENABLED | ENABLE BUFFER<br>*ENABLED |
| 3 | FLAG BIT | RECORDS IN BUFFER AT EEOT IN WRITE MODE | | | TRANSFER RATE SELECTION | | | |
| 4 | FLAG BIT | | | | | | WRITE START DELAY | |
| 5 | FLAG BIT | | CONVERT RDB TO BSB ENABLED NOTE 1 | | | AUTO LOAD FEATURE | 40 DISPLAY ENABLED NOTES 1&2 | 16/62 DISPLAY ENABLED NOTES 1&2 |
| 6 | | | | | | | | |
| 7 | | | | | | | | |
| 8 | | | | | | | | |

Blank blocks are unassigned.
Flag bit = 1 - No options entered
Flag bit = 0 - Options entered
NOTE 1: Option selectable only via test 84; no hardware jumper.
NOTE 2: If both 40 display and 16/62 display options are enabled, 40 display option prevails.

* Shipped enabled by jumper.
\# Shipped disabled by jumper.

Table 6-20. OPTION BYTES BPEI INTERFACE (STATUS WHEN BITS SET TO 1)

| | LEFT DISPLAY DIGIT | | | | | RIGHT DISPLAY DIGIT | | |
|---|---|---|---|---|---|---|---|---|
| BYTE | 0 | 1 | 2 | 3 | 4 | 5 | 6 | 7 |
| 1 | FLAG BIT | RESERVED | FORCE LO SPD WHEN AVC NOT ENABLED<br>ENABLED NOTE 1 | AVC<br>*ENABLED | | DENSITY STATUS ON I/F<br>*DISABLED | REMOTE DENSITY SELECT<br>#ENABLED | RDY = RDY·ONL<br>#ENABLED |
| 2 | FLAG BIT | | RD-AFTER-WR STROBES<br>DISABLED NOTE 1 | OP PANEL BUFFER SELECTION<br>ENABLED NOTE 1 | | PERFECT WRITE<br>ENABLED NOTE 1 | AUTO-RD ERROR RECOVERY<br>*ENABLED | ENABLE BUFFER<br>*ENABLED |
| 3 | FLAG BIT | RECORDS IN BUFFER AT EEOT IN WRITE MODE | | | | TRANSFER RATE SELECTION | | |
| 4 | FLAG BIT | | | | | | WRITE START DELAY | |
| 5 | FLAG BIT | | CONVERT RDB TO BSB ENABLED NOTE 1 | | | AUTO LOAD FEATURE | 40 DISPLAY ENABLED NOTES 1&2 | 16/62 DISPLAY ENABLED NOTES 1&2 |
| 6 | | | | | | | | |
| 7 | | | | | | | | |
| 8 | | | | | | | | |

Blank blocks are unassigned.
Flag bit = 1 - No options entered
Flag bit = 0 - Options entered
NOTE 1: Option selectable only via test 84; no hardware jumper.
NOTE 2: If both 40 display and 16/62 display options are enabled, 40 display option prevails.

* Shipped enabled by jumper.
\# Shipped disabled by jumper.

CE TEST 84 (BSTCE): SELECT/EXAMINE STU OPTIONS

NOTE

Test 84, buffered STC enhanced interface (BSTCE) includes only the STU options available with the buffered STC enhanced interface. For a description of the STU options available with the buffered standard enhanced interface, refer to the preceding test - Test 84 (BPEI).

TEST REQUIREMENT: Interface PWA must be buffered STC enhanced version. Tape must not be loaded.

TEST DESCRIPTION: Test 84 allows the examining or changing of STU options.

TEST OPTIONS: None.

TEST SEQUENCE

a. To examine options:

1. Enter CE test 84.
2. Press and hold EXECUTE switch. Display = 01 (byte 1).
3. Release EXECUTE switch. Display = value stored in byte 1.
4. Press and hold EXECUTE switch. Display = 02 (byte 2).
5. Release EXECUTE switch. Display = value stored in byte 2.

This sequence may be continued through byte 8. If no selections have been entered in a byte, display = 80 (most significant bit = 1, all others = 0).

b. To select or change options:

1. Enter CE test 84. Press and release EXECUTE switch until display = desired byte number. (Refer to option definition below.)

2. Use STEP and TEST switches to enter the value desired in the display.

3. Press EXECUTE switch. (When EXECUTE switch is released, display = next byte number.)

4. Power-down the STU to ensure transfer of option values into the interface PWA.

CE TEST 84 (BSTC E): (Cont'd)

OPTION BIT DEFINITION:

Eight bytes of an EEPROM are used to store option selections. The left digit on the operator panel indicates in hex the value of bits 0 thru 3; the right digit indicates the value in hex of bits 4 thru 7 (see table 6-20). Execution of test 37 clears all the option bits (bits 1 thru 7) to 0. Bit 0 of each byte is a flag bit indicating whether any option selections have been entered in the byte via the operator panel and test 84. If no option(s) have been entered, the display value of bit 0 is 1, and the display value of the byte is 80. After any option selection has been entered via the operator panel, the display value of the flag bit (bit 0) is 0.

OPTION BIT PRIORITIES:

The buffer enable option, remote density select option, adaptive velocity control option, and auto-read error recovery option are selectable both by test 84 and by jumpers on the buffered STC enhanced interface PWA. The priority of the selections is as follows:

a. After test 37, which clears the option bits, and before any test 84 selection is entered, each byte display = 80. Under these conditions, the jumper selection prevails.

b. After one or more selections is made in a byte via the operator panel and test 84, the content of the <u>entire</u> <u>byte</u> prevails over the jumper selections.

c. For priorities in setting buffer enabled mode or buffer disabled mode, refer to figure 6-5B.

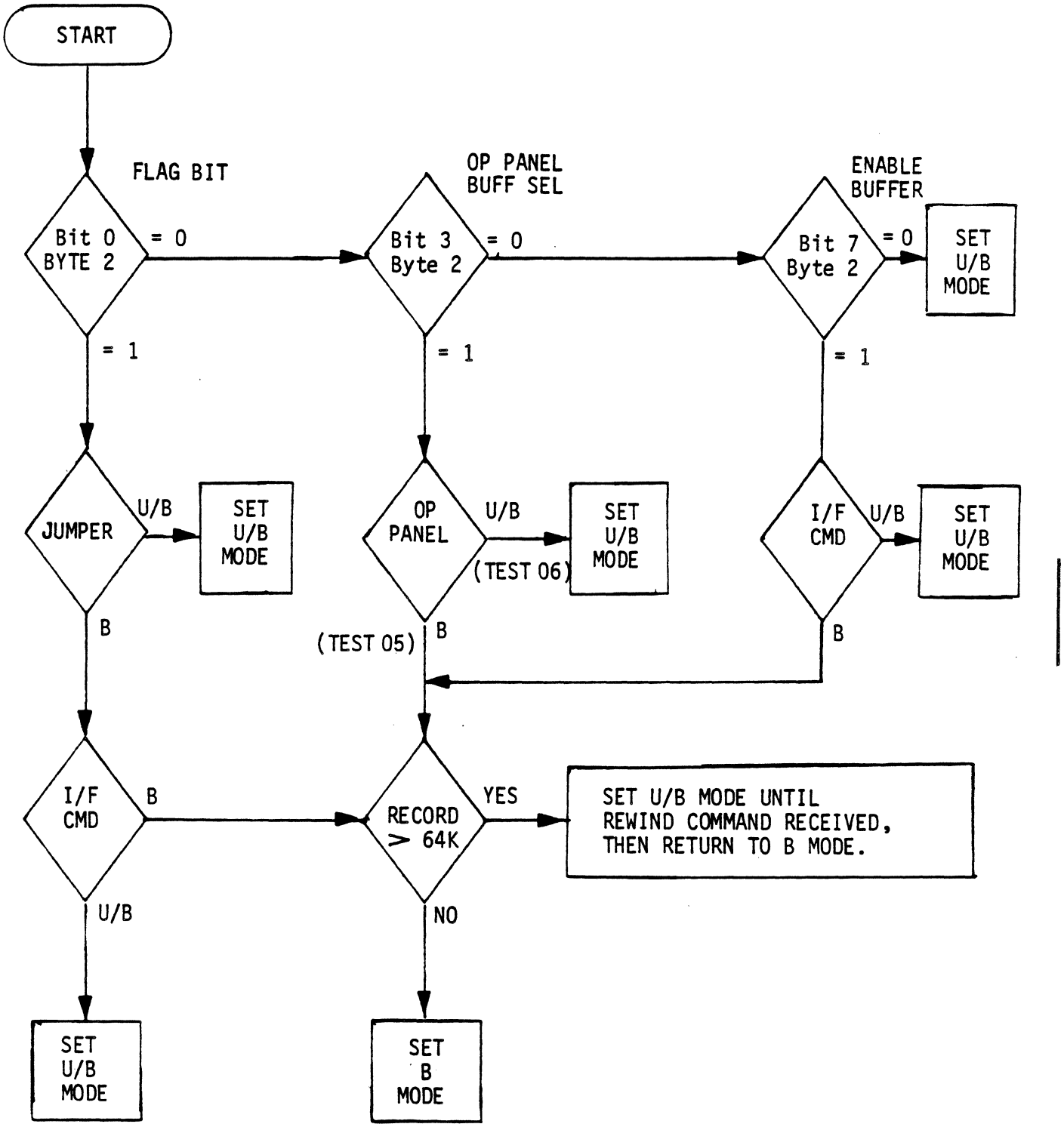


Figure 6-5B. Setting Buffered (B) or Unbuffered (U/B) Mode, Buffered STC Enhanced I/F

CE TEST 84 (BSTC E): (Cont'd)

a. Byte 1

Bit 0 = 0 - Selections entered in byte
= 1 - No selections entered in byte

Bit 1 - Reserved

Bit 2 = 0 - When AVC disabled, force high speed (75 ips)
= 1 - When AVC disabled, force low speed (25 ips)

Bit 3 = 0 - Disable AVC operation
= 1 - Enable AVC operation

Bit 4 - Not used

Bit 5 - Reserved for buffered standard enhanced interface

Bit 6 = 0 - Enable local density selection (front panel switch)
= 1 - Enable remote density selection by interface

Bit 7 = 0 - READY (RDY) status independent of ON-LINE (ONL) status
= 1 - READY (RDY) status not generated until ON-LINE (ONL) status is true

b. Byte 2

Bit 0 = 0 - Selections entered in byte
= 1 - No selections entered in byte

Bit 1 - Not used

Bit 2 - Reserved for buffered standard enhanced interface

Bit 3 = 0 - Disable operator panel buffer selection
= 1 - Enable operator panel buffer selection
(Test 05 - Enable Buffer From Operator Panel)
(Test 06 - Disable Buffer From Operator Panel)

Bit 4 - Not used

CE TEST 84 (BSTCE): (Cont'd)

Bit 5 = 0 - Disable perfect write
= 1 - Enable perfect write (no corrected errors allowed, buffered mode only)

Bit 6 = 0 - Disable read error recovery
= 1 - Enable read error recovery

Bit 7 = 0 - Disable buffer operation
= 1 - Enable buffer operation

c. Byte 3

Bit 0 = 0 - Selections entered in byte
= 1 - No selections entered in byte

Bits 1 thru 3 - Number of records allowed in buffer at Early EOT during Write.

| Bit 1 | Bit 2 | Bit 3 | No. of Records |
|---|---|---|---|
| *0 | 0 | 0 | 0 |
| 0 | 0 | 1 | 1 |
| 0 | 1 | 0 | 2 |
| 0 | 1 | 1 | 3 |
| 1 | 0 | 0 | 4 |
| 1 | 0 | 1 | 5 |
| 1 | 1 | 0 | 6 |
| 1 | 1 | 1 | 7 |

* If no bits are set, unit will go to unbuffered mode at Early EOT.

Bits 4 thru 7 - Reserved for buffered standard enhanced interface

d. Byte 4

Bit 0 = 0 - Selections entered in byte
= 1 - No selections entered in byte

Bits 1 thru 5 - Not used

Bits 6 and 7 - Reserved for buffered standard enhanced interface

CE TEST 84 (BSTCE): (Cont'd)

e. Byte 5

Bit 0 = 0 - Selections entered in byte
= 1 - No selections entered in byte

Bit 1 - Not used

Bit 2 = 0 - Disable conversion of READ REVERSE command to BACKSPACE
= 1 - Enable conversion of READ REVERSE command to BACKSPACE

Bits 3 and 4 - Not used

Bit 5 = 0 - Normal load
= 1 - Auto load

Bit 6 = 0 - Standard panel display
= 1 - Display 40 when in unbuffered mode

Bit 7 = 0 - Standard panel display
= 1 - Display 62 for GCR mode, or 16 for PE mode

f. Bytes 6 thru 8 - Not assigned

Table 6-21. OPTION BYTES BSTCE INTERFACE (STATUS WHEN BITS SET TO 1)

| | LEFT DISPLAY DIGIT | | | | RIGHT DISPLAY DIGIT | | | |
|---|---|---|---|---|---|---|---|---|
| BYTE | 0 | 1 | 2 | 3 | 4 | 5 | 6 | 7 |
| 1 | FLAG BIT | RESERVED | FORCE LO SPD WHEN AVC NOT ENABLED<br><br>ENABLED NOTE 1 | AVC<br><br>*ENABLED | | RESERVED | REMOTE DENSITY SELECT<br><br>#ENABLED | RDY = RDY·ONL<br><br>ENABLED NOTE 1 |
| 2 | FLAG BIT | | RESERVED | OP PANEL BUFFER SELECTION ENABLED NOTE 1 | | PERFECT WRITE<br><br>ENABLED NOTE 1 | AUTO-RD ERROR RECOVERY<br>*ENABLED | ENABLE BUFFER<br><br>*ENABLED |
| 3 | FLAG BIT | RECORDS IN BUFFER AT EEOT IN WRITE MODE | | | RESERVED | | | |
| 4 | FLAG BIT | | | | | | RESERVED | |
| 5 | FLAG BIT | | CONVERT RDB TO BSB ENABLED NOTE 1 | | | AUTO LOAD FEATURE | 40 DISPLAY ENABLED NOTES 1&2 | 16/62 DISPLAY ENABLED NOTES 1&2 |
| 6 | | | | | | | | |
| 7 | | | | | | | | |
| 8 | | | | | | | | |

Blank blocks are unassigned.
Flag bit = 1 - No options entered
Flag bit = 0 - Options entered
NOTE 1: Option selectable only via test 84; no hardware jumper.
NOTE 2: If both 40 display and 16/62 display options are enabled, 40 display option prevails.

* Shipped enabled by jumper.
\# Shipped disabled by jumper.

This page left blank intentionally.

## CE TEST 91: FUNCTIONAL FAULT DETECTION TEST

TEST REQUIREMENT: A write-enabled scratch tape must be threaded. The tape may be loaded or not loaded.

TEST DESCRIPTION: Test 91 performs those functions that the STU would normally perform during functional operations. Unit halts with the appropriate error code, if a functional fault occurs. Test 91 is the same as test 01, except that test 91 will start in a loaded or unloaded condition and EGC test is bypassed.

TEST OPTIONS:
- 00 = Halt if read or write errors exceed limits specified, halt on completion of test (Default option).
- 01 = Loop on test, halt if read or write errors exceed limit specified on any given pass.
- 02 = Loop on test, bypass read or write error halts.

NOTE

Option of halting or bypassing errors applies only to read/write type errors; all other errors cause test to halt, with appropriate fault code displayed, regardless of the option selected.

TEST SEQUENCE:

a. If tape is unloaded then load tape; otherwise, rewind tape.

b. WRITE 100 blocks in PE mode at 25 ips start/stop (see NOTE 1).

c. SPACE REVERSE, ERASE, and WRITE FILE MARK (check for file mark detected). SPACE REVERSE and check for file mark detected. READ FORWARD and again check for file mark detected.

d. READ REVERSE 100 blocks at 25 ips start/stop.

e. READ FORWARD 100 blocks at 25 ips start/stop.

CE TEST 91: (Cont'd)

f. Repeat steps b thru e at 25 ips streaming.

g. Repeat steps b thru e at 75 ips streaming.

h. WRITE 10 blocks at 75 ips "thrashing" (see NOTE 2).

i. READ REVERSE 10 blocks at 75 ips "thrashing".

j. READ FORWARD 10 blocks at 75 ips "thrashing".

k. REWIND.

l. READ FORWARD 300 blocks at 75 ips streaming. Check for file mark detected at blocks 100, 200, and 300.

m. REWIND.

n. Repeat steps b thru e for GCR mode and SPACE REVERSE where READ REVERSE is specified.

o. WRITE to EOT in GCR mode at 75 ips streaming (see NOTE 1).

p. SPACE REVERSE 1000 records at 75 ips streaming (reposition after every 250 records).

q. Write to EOT in GCR mode at 25 ips streaming.

r. REWIND.

NOTE 1: Data blocks written are 2K bytes with an incrementing pattern starting at zero for each block.

NOTE 2: Data blocks written are 256 bytes with an incrementing pattern starting at zero for each block.

POSSIBLE DIAGNOSTIC CODES:

00 - Test is successful
Fault Codes
01 - Read envelope fault
02 - Read amplitude range fault
03 - ID check
04 - Low speed write error
05 - Low speed read error
06 - High speed write error
07 - High speed read error
08 - Noise in IBG
09 - Hardware failure
10 thru 69 - Refer to Structured Analysis Method (SAM)

CE TEST 97: READ/WRITE COMMAND STACK

TEST REQUIREMENT: None.

TEST DESCRIPTION: Test 97 allows the CE to set up a command stack using READ, WRITE, SPACE, and ERASE commands. Up to three commands can be entered. The commands available are:

READ FORWARD - 00
READ REVERSE - 80
SPACE FORWARD - 08
SPACE REVERSE - 88
WRITE PE - 40
ERASE - 58
NO-OP - 70 or 01 (included to allow "in-place" analysis)
WRITE FILE MARK PE - 50
REWIND - 74
WRITE GCR - 41
WRITE FILE MARK GCR - 51

TEST OPTIONS: None.

TEST SEQUENCE:

a. Set up for test 97 and press EXECUTE.

b. Display goes to 00 - enter first desired command using STEP and TEST (to multiply by 10) and press EXECUTE.

c. Repeat step b two more times to enter second and third commands.

d. After third entry, display goes to 00 and fault indicator lights. Test is terminated.

POSSIBLE DIAGNOSTIC CODES:

99 - Illegal remote test

NOTE 1: Tests 28 and 29 cause execution of the commands set up in this command stack routine.

This page left blank intentionally.

## GENERAL

This subsection of the manual contains information for the removal and replacement of parts or assemblies as defined in the spare parts list. In addition, a verification test follows each of the replacement procedures. The reader should be thoroughly familiar with the operation of the STU and with the diagnostic test procedures.

It is assumed that any part or assembly being replaced has been determined to be defective. If an adjustment procedure is included as part of the procedure, then the adjustment must be attempted before a part or assembly is replaced. In addition, the adjustment must also be performed following the replacement procedure.

Unless otherwise stated, for all procedures it is assumed that tape has been unloaded, the transport is powered down, and the input power cord is disconnected. For component location, refer to figures 6-6A, 6-6B, and 6-6C.

Table 6-23. REMOVAL/REPLACEMENT INDEX

| | | | |
|---|---|---|---|
| 1. | Drive Cover | 11. | Pressure Regulator/Filter |
| 2. | Tape Cleaner | 12. | Magnetic Head |
| 3. | Door Interlock Switch | 13. | Operator Panel |
| 4. | File Protect Sensor | 14. | Cooling Fan |
| 5. | EOT/BOT Sensor | 15. | Power Supply |
| 6A. | Take-Up Reel Hub | 16. | Capacitor |
| 6B. | Take-Up Reel Motor | 17. | Write Driver PWA |
| 7A. | Supply Reel Hub | 18. | Read Amplifier PWA |
| 7B. | Supply Reel Motor | 19. | Servo-Control PWA |
| 7C. | Supply Reel Tach and Sensor | 20. | Formatter Read PWA |
| 8. | Air Bearing Sensor | 21. | Formatter Write PWA |
| 9. | Air Bearing Spring Guides | 22. | Interface PWA |
| 10. | Compressor | 23. | Power Driver PWA |

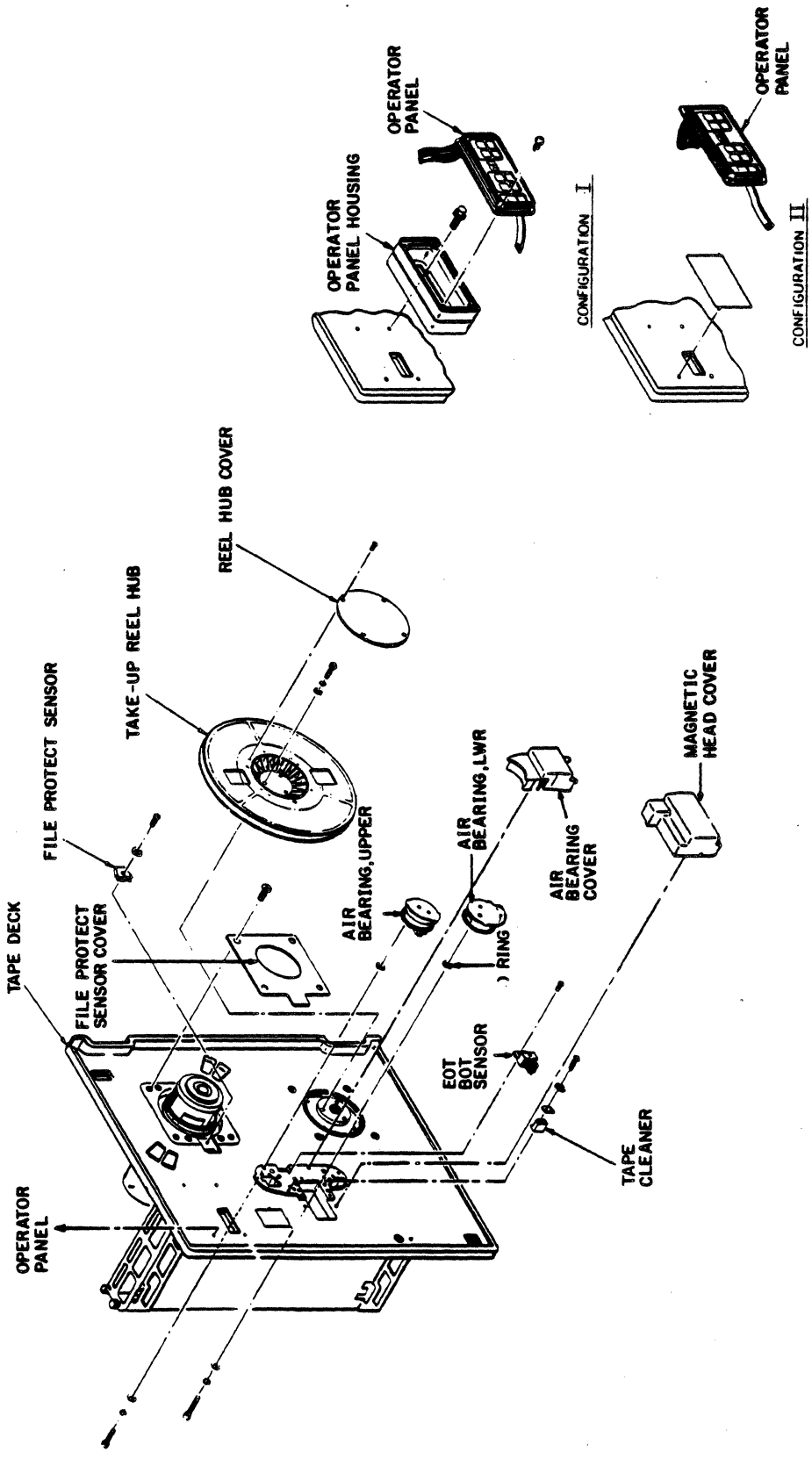


Figure 6-6A. STU Component Location

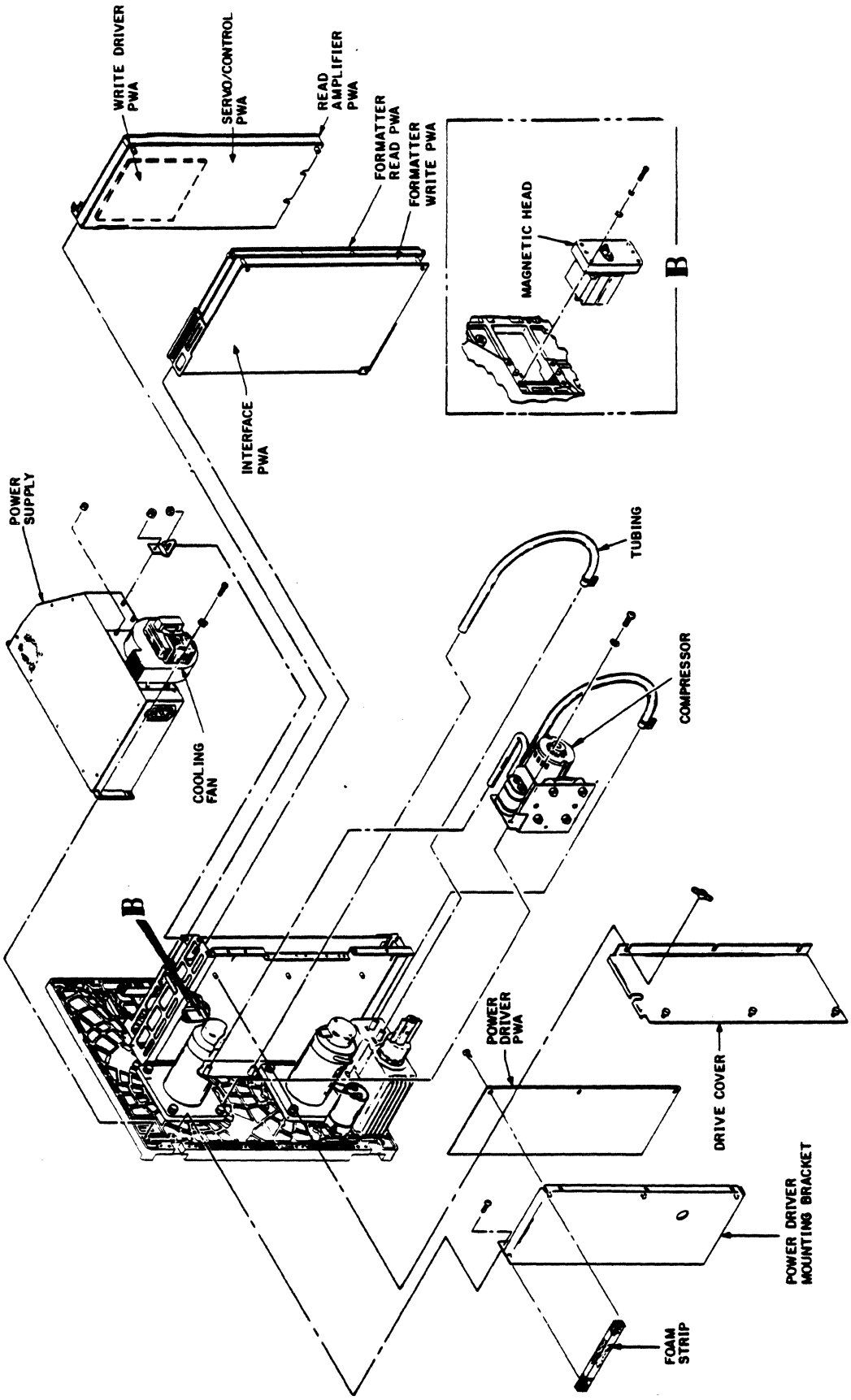


Figure 6-6B. STU Component Location

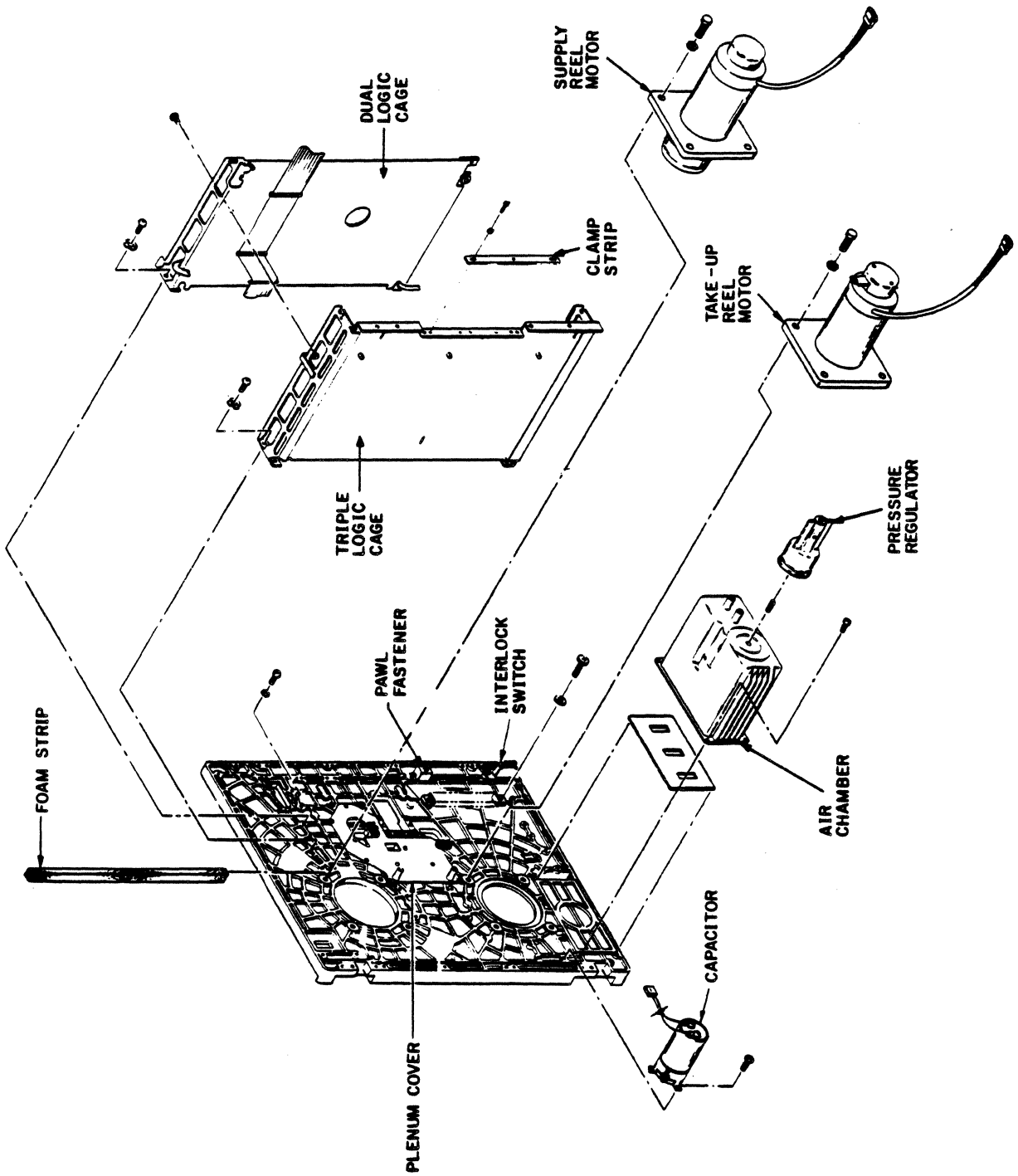


Figure 6-6C. STU Component Location

## MAINTENANCE POSITION (ACCESS TO REAR COMPONENTS)

Components located at the rear of the tape deck can be accessed for maintenance purposes by first placing the tape deck in the maintenance position. Using Figure 6-7 for reference, proceed as follows:

1. Open the front dust cover door.

2. Using a straight slot screwdriver, rotate the pawl fastener on the lower left side of the tape deck one-half turn counterclockwise to release the tape deck. Rotate the fastener six more turns counterclockwise to disengage the pawl fully.

3. The tape deck can now be swung to the fully opened position to access rear components.

4. To return the tape deck to the operating position, swing the tape deck to the closed position. While holding tape deck in the closed position, rotate the pawl fastener until the transport is secured to the mounting rack.

## FRONT COVER INTERLOCK SWITCH

The front cover interlock switch prevents operation of the STU if the front cover is not secured. If the customer engineer is required to operate the transport with the front cover open, the interlock switch can be bypassed by using the interlock override key. Insert the key as shown in Figure 6-7 and rotate the key one-quarter turn to lock the key into the interlock switch. This keeps the interlock switch depressed, simulating the "door closed" condition.

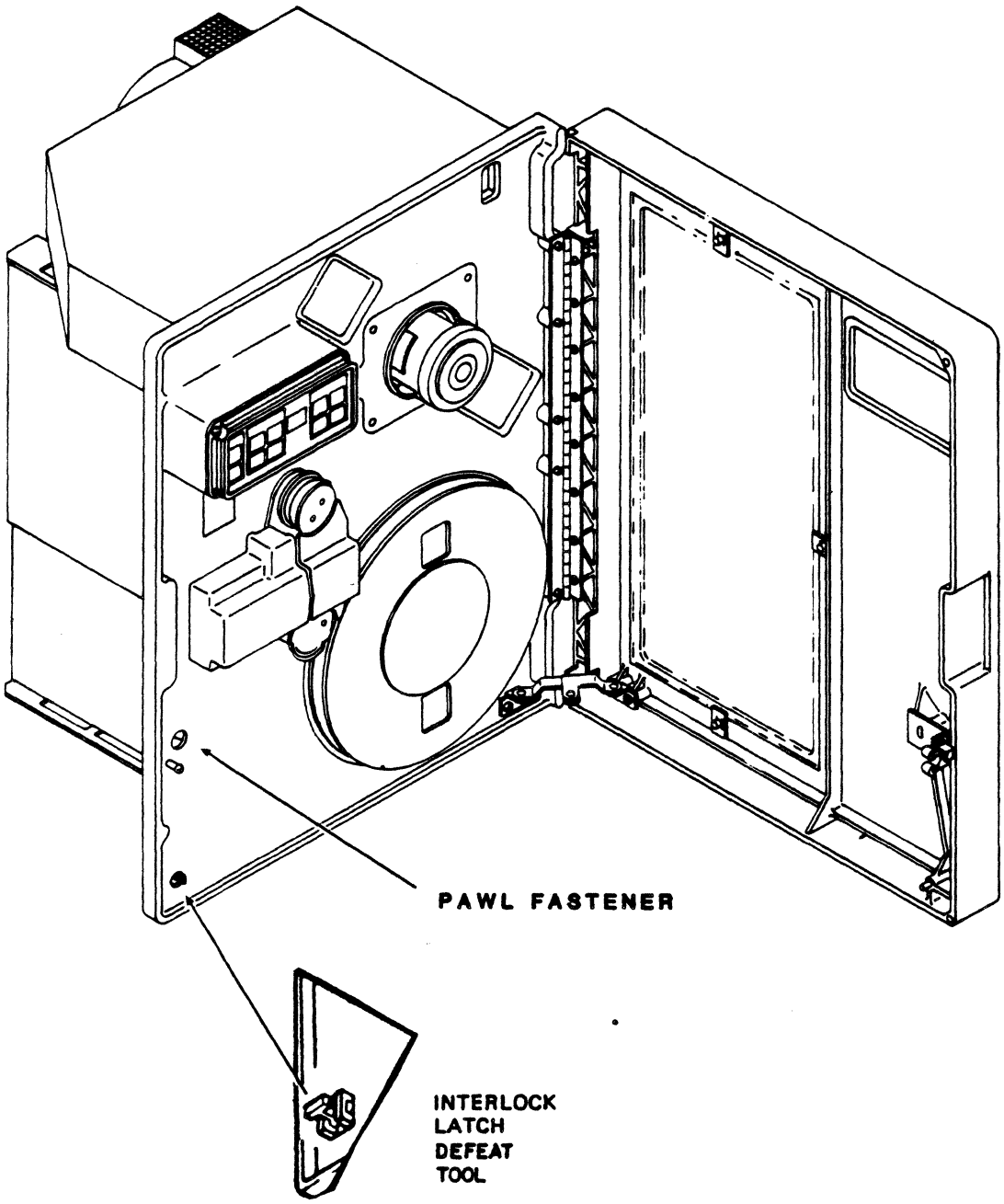


Figure 6-7. Access to Rear Tape Deck Components

DRIVE COVER REMOVAL/REPLACEMENT

Removal

1. Place the tape deck in the maintenance position.

2. Loosen the nuts and the screws securing the cover and remove the drive cover assembly (figure 6-8). (The drive cover assembly consists of the drive cover with attached foam strips and grommet.)

Replacement

1. Place the drive cover assembly in position so that the cooling fan wires are placed in the feed-thru hole.

2. Secure the cover with the nuts and the screws.

3. Return the tape deck to the operating position.

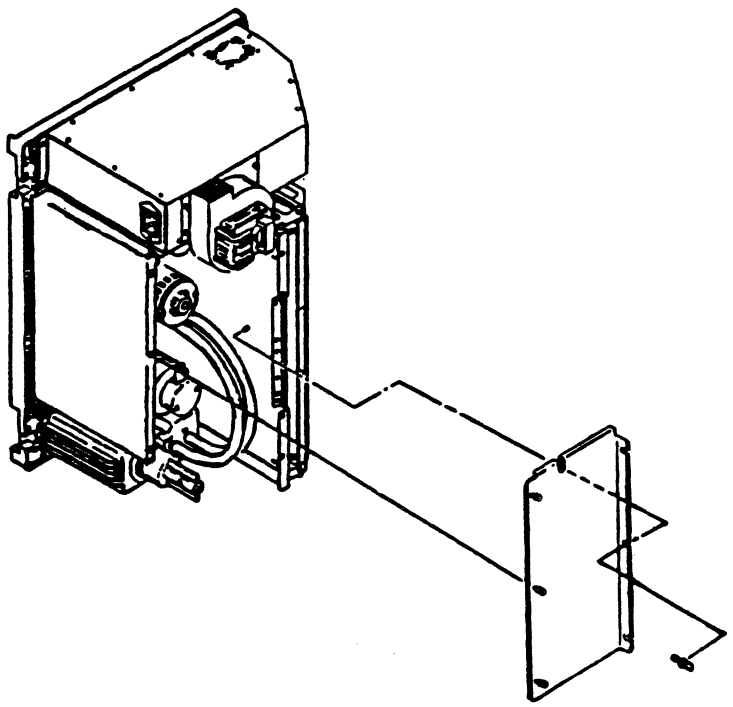

Figure 6-8. Drive Cover Removal

TAPE CLEANER REMOVAL/REPLACEMENT

Removal

1. Remove the tape path cover and magnetic head covers from the tape deck.

2. Loosen the two mounting screws and remove the cleaner assembly from the tape deck. See figure 6-9.

3. Remove screws, lockwashers and cover plate from the blade housing.

4. Slide the platform out from the tape cleaner assembly.

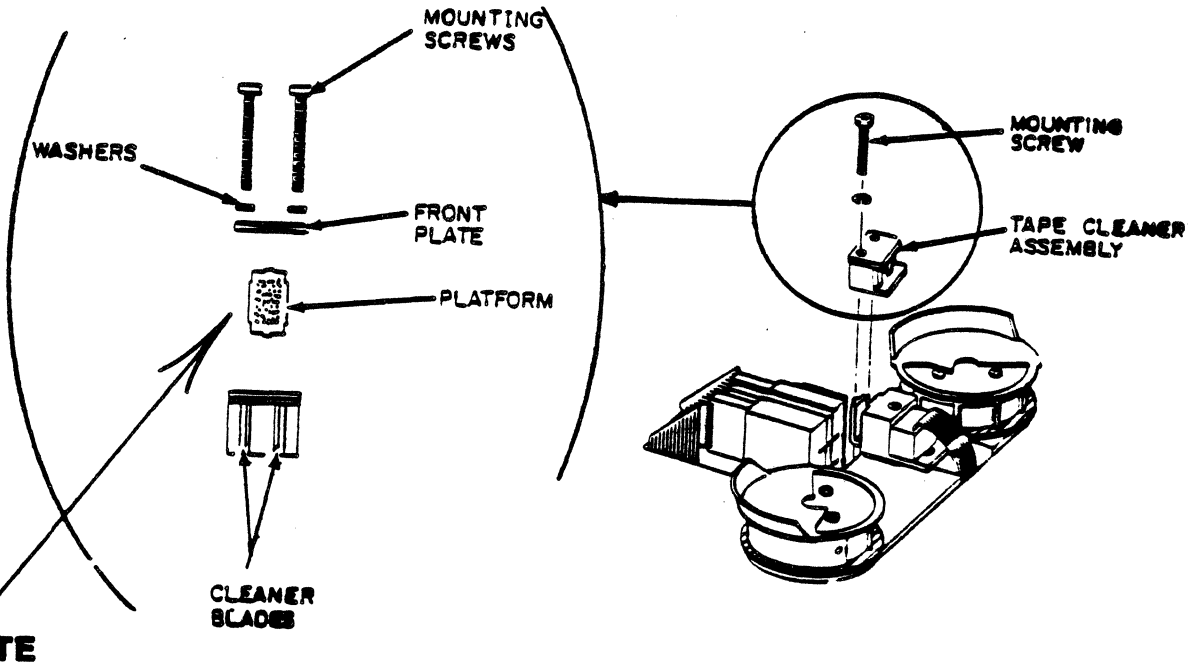


NOTE

SCRAPER ASSY P/N 77031270 DOES NOT HAVE A PLATFORM.

Figure 6-9. Tape Cleaner

CAUTION

Handle the assembly with care. The cleaner blades are both brittle and sharp.

NOTE

The defective tape cleaner must be replaced as a complete assembly.

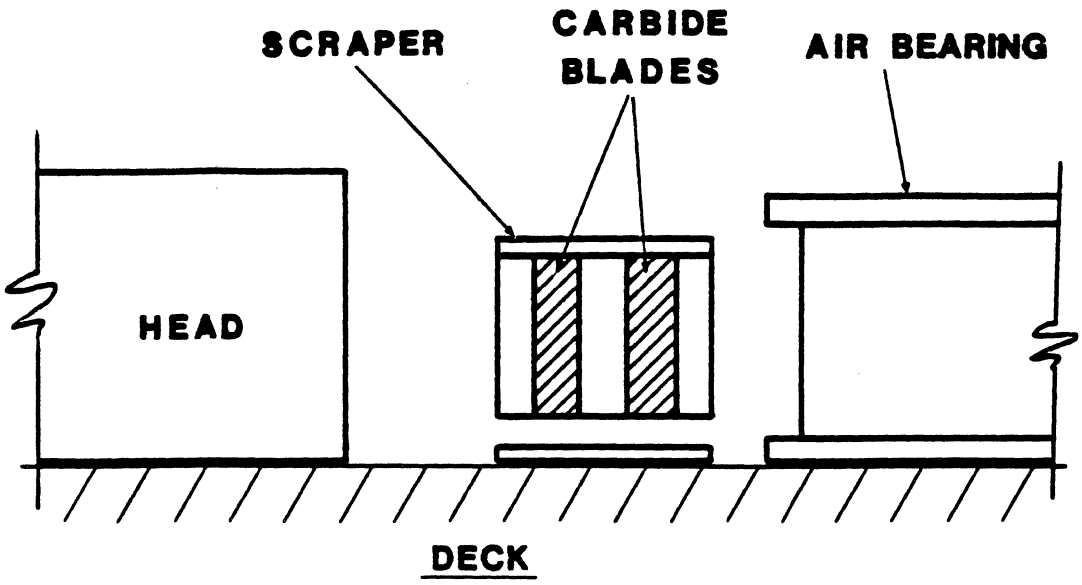


**CAUTION**

Replacement scraper P/N 77031270 with carbide blades is sensitive to magnetic fields. Do not use magnetized tools.

TAPE CLEANER REMOVAL/REPLACEMENT (Cont'd)

Replacement

1. Inspect cleaner blades for damage. If blades are chipped or damaged, replace entire assembly.
2. If blades are not damaged, clean platform and reinstall. When installing platform, ensure flanges are such that platform fits firmly inside cleaner assembly.
3. Install cover plate, two washers and mounting screws.
4. Position assembly onto guide pins on tape deck and secure screws.
5. Reinstall tape path and magnetic head covers.

Verification Check

1. No functional checks are necessary.

DOOR INTERLOCK SWITCH REMOVAL/REPLACEMENT

## Removal

1. At the rear of the tape deck, remove four labeled slip-on connectors from interlock switch connectors. (If any wires are not labeled, identify and mark each wire for reassembly.)

2. Remove two hex head screws securing switch plate to tape deck. Remove switch and switch plate.

3. Depress top and bottom release tabs on switch to separate switch from switch plate.

## Replacement

1. Assemble switch to switch plate.

2. Position switch assembly on the rear of the tape deck so that connector numbers on switch correspond to numbers stencilled on tape deck.

3. Insert two hex mounting screws. Position front dust cover door so that interlock switch can be aligned with actuating stud on door. Tighten switch mounting screws when center of switch front is aligned with actuating stud.

4. Attach slip-on connectors to appropriate studs of interlock switch. Refer to figure for wire and connector positions.

## Verification Checks

1. With tape threaded, but not loaded, execute operator test 01. If test is successful, test terminates with display 00. If test fails, refer display number to corresponding fault SAM.

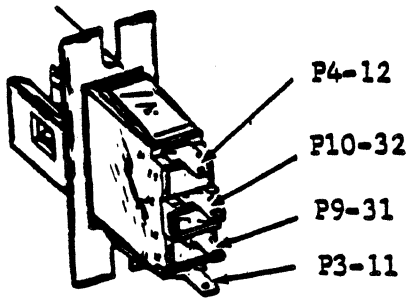


Figure 6-10. Door Interlock Switch (Rear View)

FILE PROTECT SENSOR REMOVAL/REPLACEMENT

Removal

1. Remove tape reel from supply hub.

2. Remove four mounting screws and file protect sensor cover plate from tape deck.

3. Remove mounting screw and washer securing file protect sensor to tape deck.

4. Detach connector W3P6 from sensor and discard sensor.

Replacement

NOTE

Refer to figure 6-11 for sensor alignment and cable plug connection.

1. Place sensor on tape deck and secure with mounting screw and washer.

2. Attach cable plug W3P6 to sensor pins.

3. Reinstall sensor cover plate and secure to tape deck with four mounting screws.

Verification Check

1. Perform SAM 1003 to verify operation of file protect sensor circuit.

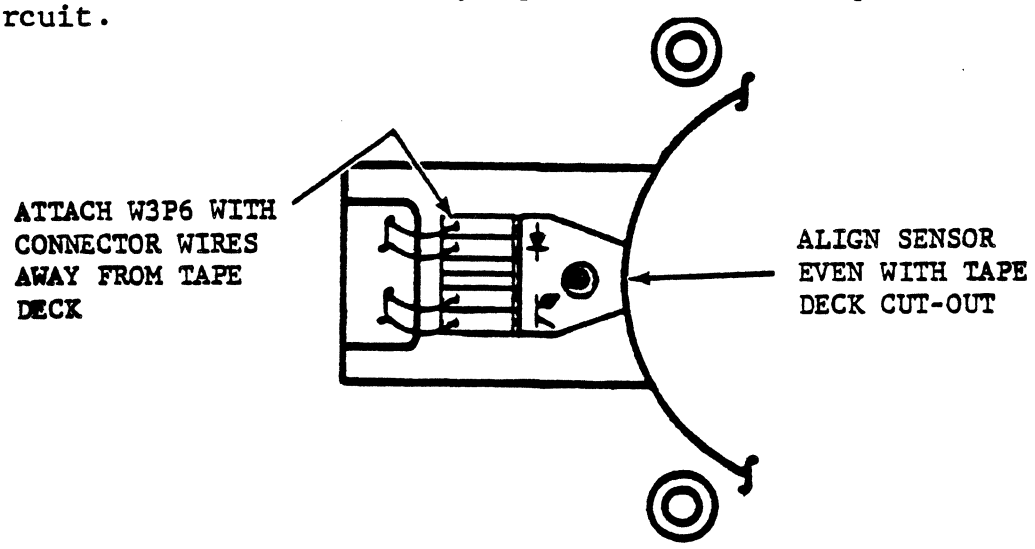


Figure 6-11. File Protect Sensor Alignment

## EOT/BOT SENSOR REMOVAL/REPLACEMENT

### Removal

1. Remove tape path and magnetic head covers from tape deck.
2. Disconnect W3P1 plug from EOT/BOT assembly (see figure 6-12).
3. Remove flat head phillips mounting screw from assembly base-mount and assembly from tape deck.

NOTE

Defective sensor must be replaced as a complete assembly.

### Replacement

1. Position EOT/BOT assembly onto tape deck and install flat head mounting screw.
2. Thread tape onto take-up reel and align EOT/BOT assembly so that assembly is perpendicular to tape.
3. Tighten flat head mounting screw.
4. Reattach W3P1 plug to assembly connector as shown. If excess cable exists, position cable so that excess is at the rear of tape deck.
5. Install tape path and magnetic head covers.

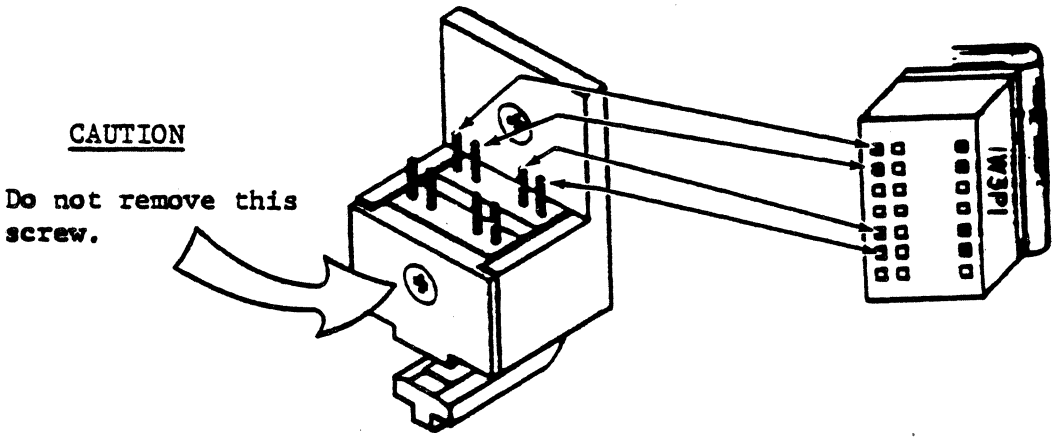


Figure 6-12. EOT/BOT Sensor

Verification Check

NOTE

If available, use a 600 foot reel of tape with properly installed EOT/BOT markers to reduce test time.

1. Load a reel of tape onto supply hub and thread tape so that BOT marker is located before EOT/BOT assembly.

2. Perform a load operation and observe that tape loads and positions itself at BOT marker (BOT indicator lights).

3. Execute test 44 to verify operation of EOT sensor. If tape does not stop when EOT is reached, refer to TROUBLE ANALYSIS section for procedures.

TAKE-UP REEL HUB REMOVAL/REPLACEMENT

Removal

1. Remove four mounting screws from take-up reel hub cover and remove cover from hub assembly (refer to figure 6-13).

2. Remove three allen screws, lockwashers and plain washers securing reel to motor shaft assembly.

3. Remove take-up reel from transport.

Replacement

CAUTION

If a new reel is being installed, inspect reel edges for burrs or cracks that could cause tape damage.

1. Perform Removal procedure in reverse order.

Verification Checks

1. Manually rotate tape reel to ensure reel does not contact tape deck.

2. Load a known good reel of tape and observe reel during tape motion. Tape should not contact reel flanges.

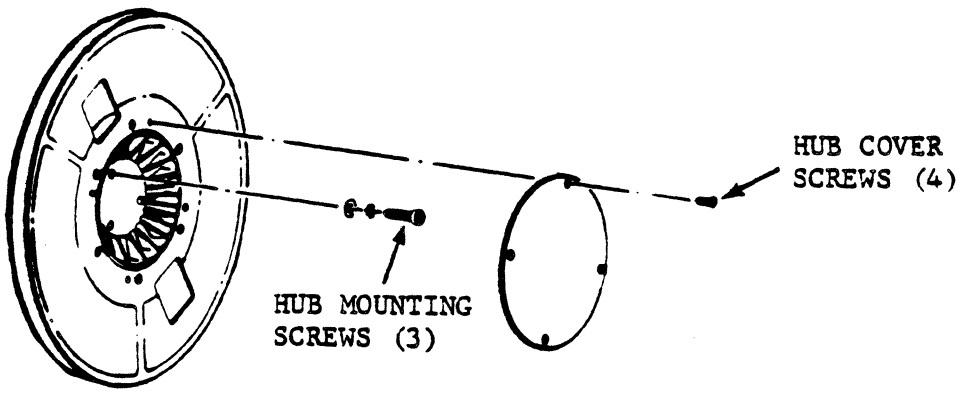


Figure 6-13. Take-Up Reel

## TAKE-UP REEL MOTOR REMOVAL/REPLACEMENT

### Removal

1. Perform Removal procedure for take-up reel hub.
2. Detach connector W3P2 from tach assembly on rear of take-up motor.
3. Detach B3P1 connector from power driver board (connector J1 on power driver).
4. Detach W7P7 connector from power driver board (connector J4 on power driver).
5. Remove four mounting screws securing motor to rear of tape deck. Remove motor from transport.

### Replacement

NOTE

Reel motor and tach must be replaced as an assembly.

CAUTION

When installing motor, make sure there are no loose wires between motor mounting plate and tape deck.

1. Position motor on rear of tape deck so that B3P1 cable extends from upper left of motor assembly if STU is mounted vertically, or lower right if STU is mounted horizontally. Secure with four mounting screws.
2. Connect B3P1 to J1 on power driver board.
3. Connect W3P2 to tach assembly on rear of motor.
4. Connect W7P7 to J4 on power driver board.
5. Perform Replacement procedure for take-up reel hub.

Verification Check

1. Execute test 37 (refer to test description for requirements).
2. Execute test 48 (refer to test description for requirements).
3. Thread tape (not loaded) and execute operator test 01. If test is successful, test will terminate with display 00. If test fails, refer display number to the corresponding fault SAM.
4. If power-on auto-load option was enabled before service, execute test 50.

This page intentionally left blank.

SUPPLY REEL HUB REMOVAL/REPLACEMENT

Removal

1. Press center button on hub to put hub into the unlatched position.

2. Locate slot opening on periphery of cover. Insert small blade screwdriver into slot and twist to unsnap cover from hub assembly.

3. Place hub assembly in the latched position by depressing cam carrier.

CAUTION

Ensure hub is latched before proceeding with further removal. If hub is unlatched, piece parts may disassemble.

4. Remove three large shoulder screws from cam carrier. Hub assembly can then be removed from tape deck.

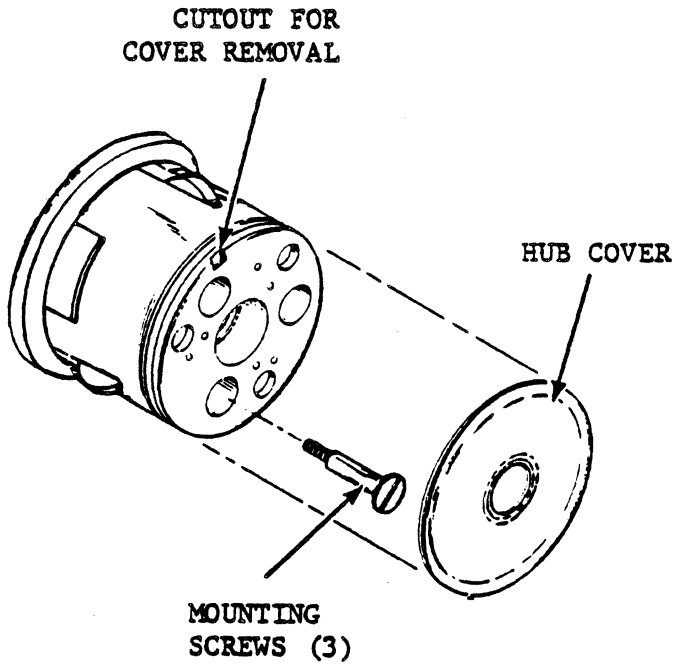


Figure 6-14. Supply Reel Hub Assembly

Replacement

1. Position hub assembly onto motor shaft assembly and secure with three large shoulder screws.

2. Install cover on face of hub assembly.

Verification Checks

1. Mount tape reel onto hub assembly. Reel should mount easily onto hub and against rear flange.

2. Latch reel onto hub. Ensure reel is securely fastened.

3. Load a known good quality tape and observe reel during tape motion. Tape should not contact reel flanges.

4. With tape threaded, but not loaded, execute operator test 01. If test is successful, test will terminate with display 00. If test fails, refer display number to corresponding fault SAM.

IMPORTANT

The supply reel motor assembly is not supplied as part of the spare parts list; the spared take-up reel motor assembly must be disassembled and the motor used as a replacement for the supply motor.

Removal

1. Perform Removal procedure for supply reel hub.
2. Detach B1P1 connector from J3 on power driver PWA.

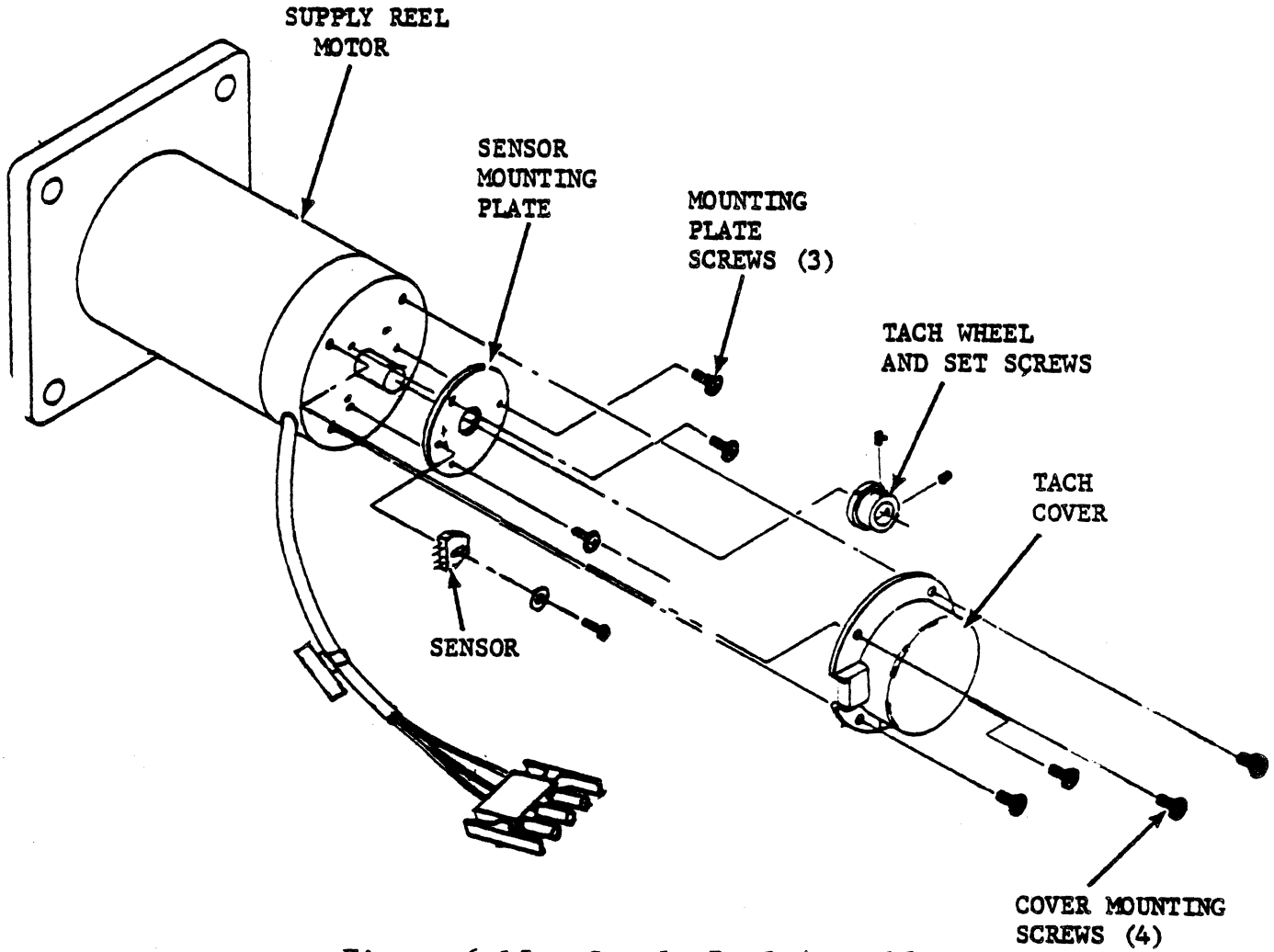


Figure 6-15. Supply Reel Assembly

Removal (Cont'd)

3. Remove four mounting screws and tach cover from rear of motor.

4. Detach W3P5 connector from tach assembly at rear of motor.

5. Remove four mounting screws securing motor to rear of tape deck. Remove motor from transport.

6. Remove mounting screw and sensor from mounting plate at rear of supply reel motor. Retain for reuse.

7. Loosen two set screws securing tach to motor shaft and remove tach from shaft. Retain for reuse.

8. Remove four screws securing mounting plate and remove plate from supply reel motor. Retain for reuse.

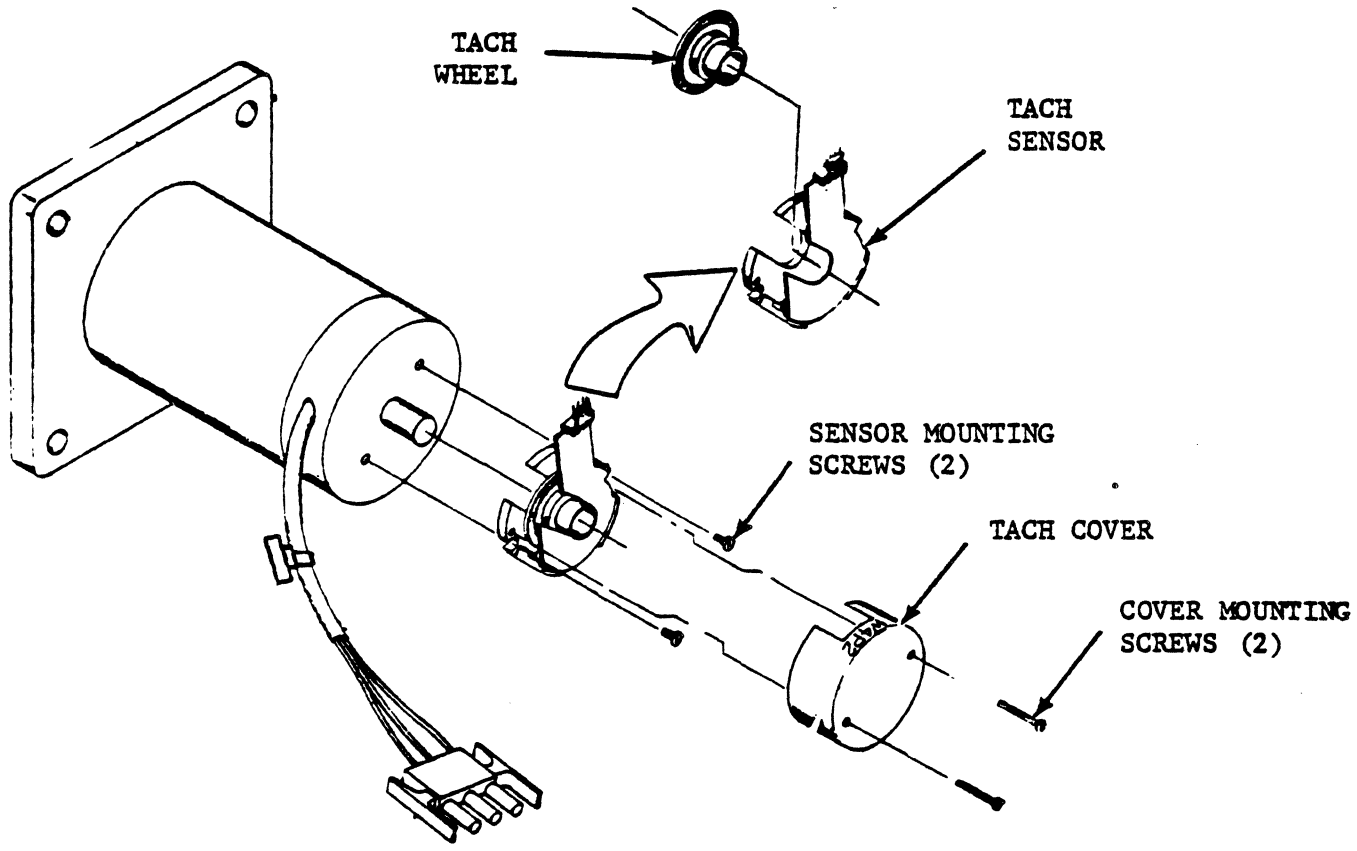


Figure 6-16. Take-Up Reel Motor Disassembly

Removal (Cont'd)

9. Disassemble spared take-up reel motor assembly as follows:

   a. Remove two mounting screws and tach cover from rear of motor assembly.

   b. Remove two mounting screws securing tach sensor to reel motor. Remove tach sensor from reel shaft and tach wheel.

   c. Loosen set screw securing tach wheel and remove from motor shaft.

   d. Return removed tach assembly:

      COMPUTER PERIPHERALS INC.
      2621 Van Buren Avenue
      Valley Forge Corporate Center
      Norristown, PA. 19403

Replacement

1. Place mounting plate (from step 8 of Removal) onto rear of new motor and secure with four mounting screws.

2. Assemble sensor and tach wheel (from steps 6 and 7 of Removal) onto rear of motor mounting plate and shaft as shown in figure 6-17 and adjust per tolerance requirements listed in the Supply Motor Tach and Sensor Procedures.

CAUTION

When installing motor, ensure there are no loose wires between motor mounting plate and tape deck.

3. Position motor on rear of tape deck so that B1P1 cable extends from left of motor if STU is mounted vertically, or from the right. Secure motor with four mounting screws.

4. Connect B1P1 cable to J3 on power driver PWA.

5. Attach W3P5 connector to tach sensor pins as shown in figure 6-17.

Replacement (Cont'd)

6. Install tach cover and secure with four mounting screws.

7. Perform Replacement procedure for supply reel hub.

Verification Check

1. With tape threaded, but not loaded, execute operator test 01. If test is successful, test will terminate with display 00. If test fails, refer display number to appropriate SAM table.

SUPPLY REEL MOTOR TACH AND SENSOR REMOVAL/REPLACEMENT

## Removal

1. Remove four mounting screws and tach cover from rear of motor.

2. Detach W3P5 connector from sensor pins.

3. Remove mounting screw and sensor from mounting plate.

4. Loosen two set screws securing tach to motor shaft and remove tach from shaft.

## Replacement (Refer to Figure 6-17)

1. Insert tach wheel on motor shaft. Position tach for a 0.030 ± 0.005 inch clearance between tach and sensor mounting plate.

2. Install sensor on mounting plate and position for a clearance of 0.150 ± 0.01 inch between sensor and tach. Tighten sensor mounting screw.

3. Attach W3P5 connector to sensor pins.

4. Install tach cover and secure with four mounting screws.

## Verification Check

1. With tape threaded, but not loaded, execute operator test 01. If test is successful, test will terminate with display 00. If test fails, refer display number to corresponding fault SAM.

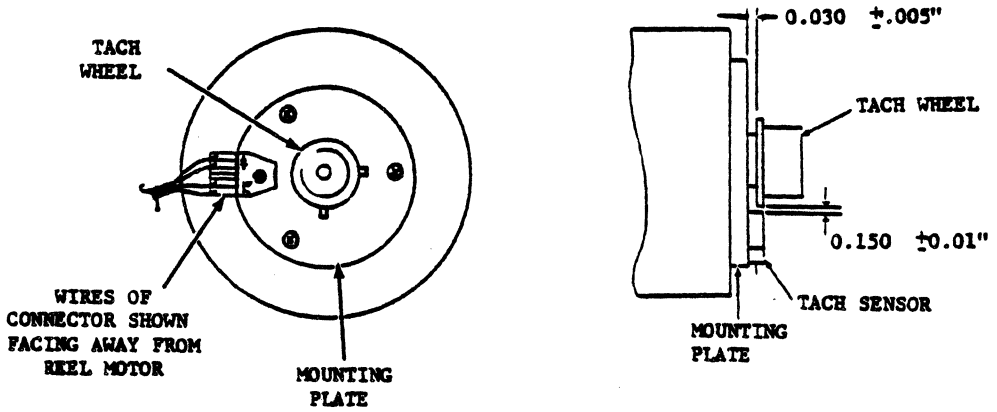


Figure 6-17. Tach/Sensor Assembly/Adjustments

AIR BEARING SENSOR REMOVAL/REPLACEMENT

Removal

NOTE

Replacement parts for air bearing assembly are contained in a refurbishment kit P/N 77015691. This kit contains an upper and lower spring guide, sensor, and a small and large O ring. If sensor is being replaced, it is recommended that upper and lower spring guides and large and small "O" rings also be replaced.

1. From the rear of the tape deck, remove P1 connector from the sensor pins.

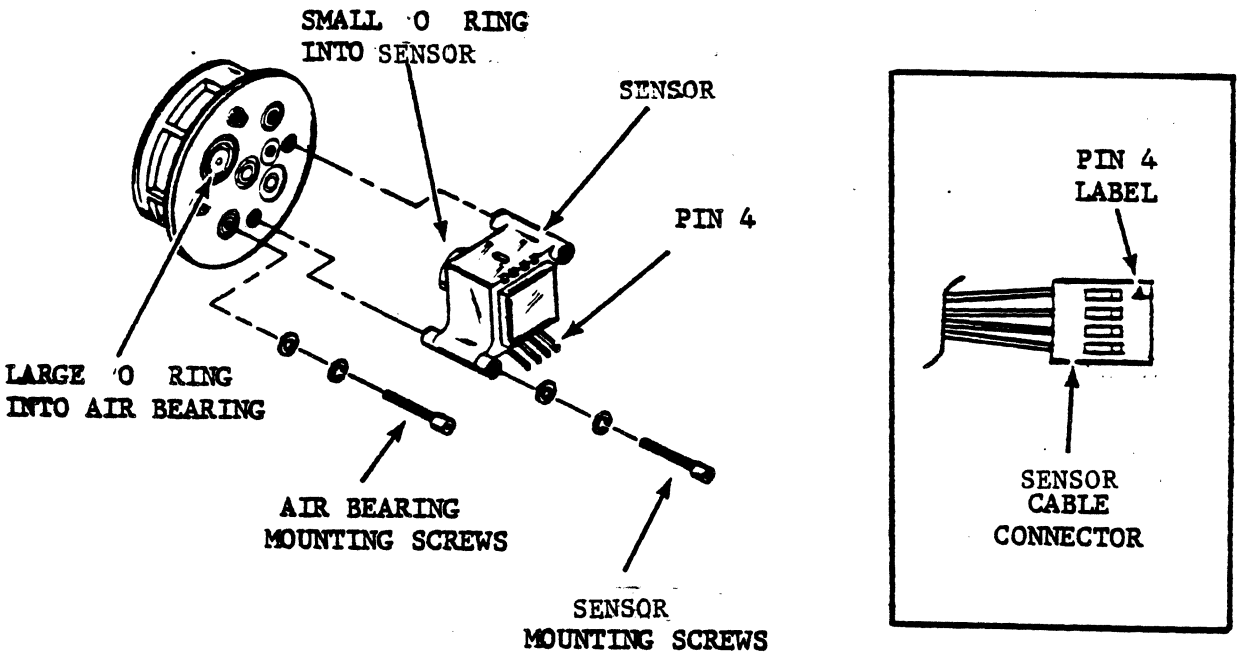


Figure 6-18. Air Bearing Sensors

Removal (Cont'd)

2. To gain access to the screws holding the sensor , perform the following:

   a. Completely loosen both thumbwheels (top and bottom) to partially release the servo/read/write card set from the logic cage. Swing the card set out (figure 6-31).

3. Remove the two socket head screws and washers securing the sensor to the rear of the air bearing. Remove the sensor and the small O ring from the bearing housing.

Replacement

1. Insert a new small O ring in the aperture at the rear of the air bearing housing.

2. Position the sensor on the air bearing so that connector pins are positioned towards the outside of the air bearing. Secure the sensor with mounting screws and washers.

3. Re-attach connector P1 to the sensor pins. Refer to figure 6-18 for pin orientation.

4. Secure the servo/read/write card set to the logic cage with thumbwheel screws (figure 6-31).

Verification Check

1. With tape threaded, but not loaded, execute operator test 01. If test is successful, test will terminate with display 00. If test fails, refer display number to corresponding fault SAM.

AIR BEARING SPRING GUIDE REMOVAL/REPLACEMENT

Removal

NOTE

Replacement parts for the air bearing assembly are contained in a refurbishment kit P/N 77015691. This kit contains an upper and lower spring guide, transducer, and a small and large O ring. If a spring guide is being replaced, it is recommended that both upper and lower guides be replaced.

1. Remove tape path and magnetic head covers from tape deck.
2. Remove two phillips head screws securing upper spring guide, isolator, and guard to bearing housing (see figure 6-19).
3. Remove spring guard, isolator, and guide from housing.
4. Repeat steps 2 and 3 to remove lower spring guide.

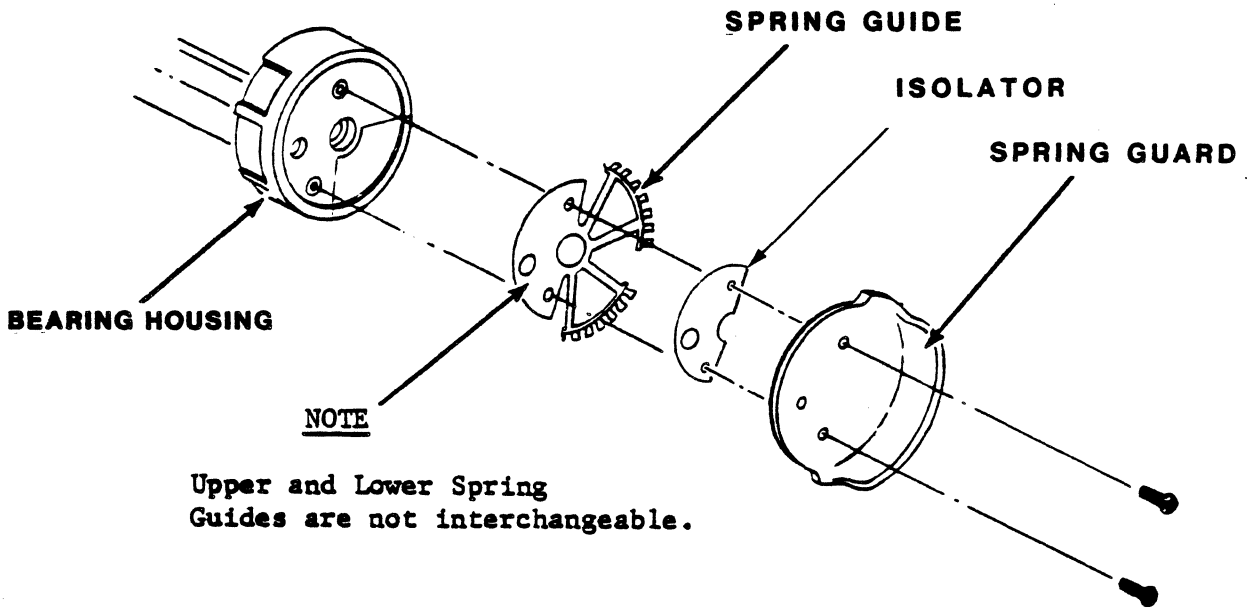


Figure 6-19. Air Bearing Spring Guide

## Replacement

1. Place new upper spring guide (P/N 77004255), isolator, and guard into bearing housing. Holes for mounting screws provide positive alignment of both piece parts to housing.
2. Secure with two phillips head screws.
3. Repeat steps 1 and 2 using spring guide (P/N 77004254) to replace lower spring guide.
4. Reinstall head covers on tape deck.

## Verification Checks

1. With tape threaded, but no loaded, execute operator test 01. If test is successful, test terminates with display 00. If test fails, refer display number to corresponding fault SAM.
2. Visually observe tape for no tape edge damage.

COMPRESSOR REMOVAL/REPLACEMENT

Removal

1. Detach connector W4P1 from the power supply.

2. Remove pneumatic tubing (vacuum and pressure lines) from nipples on air chamber.

NOTE

Detach any wiring that may interfere with the removal of compressor assembly.

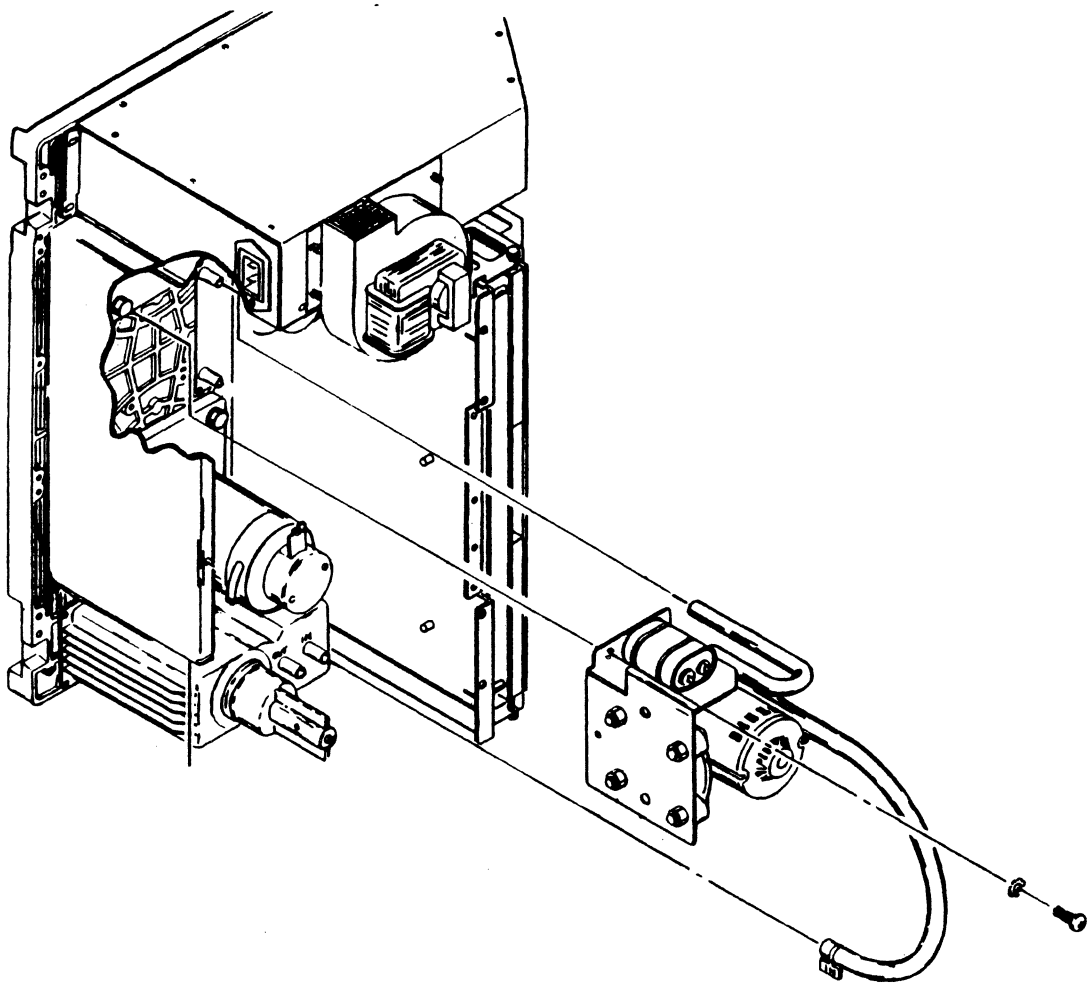

Figure 6-20. Compressor

Removal (Cont'd)

3. Remove four mounting screws securing compressor assembly to rear of tape deck. Carefully withdraw assembly from transport.

Replacement

1. Position compressor assembly to rear of tape deck and secure with washers and mounting screws.
2. Attach pneumatic tubing to nipples on air chamber.
3. Attach connector W4P1 to power supply.

NOTE

Reattach any wiring that was disconnected prior to the Removal procedure.

Verification Check

1. Thread tape. Do not load. Execute operator test 01.

## PRESSURE REGULATOR AND FILTER REMOVAL/REPLACEMENT

NOTE

If only the pressure regulator is being replaced, perform Removal step 1, Replacement step 4, and Verification Check. If filter is being replaced, perform the entire Removal/Replacement and Verification Check procedures.

### Removal

1. Remove the pressure regulator by unscrewing the regulator from the air chamber.
2. Remove the two pneumatic tubes from the IN and OUT nipples on the air chamber.
3. Remove the four mounting screws securing the air chamber and remove the air chamber from the tape deck.
4. Remove the filter from the air chamber.

### Replacement

1. Position the filter into the air chamber.
2. Secure the air chamber to the tape deck with the four mounting screws.
3. Install the two pneumatic tubes on the IN and OUT nipples.
4. Screw the pressure regulator clockwise onto the air chamber assembly.

### Verification Check

1. With tape threaded, but not loaded, execute operator test 01. If test is successful, test will terminate with display 00. If test fails, refer the display number to the corresponding fault SAM.

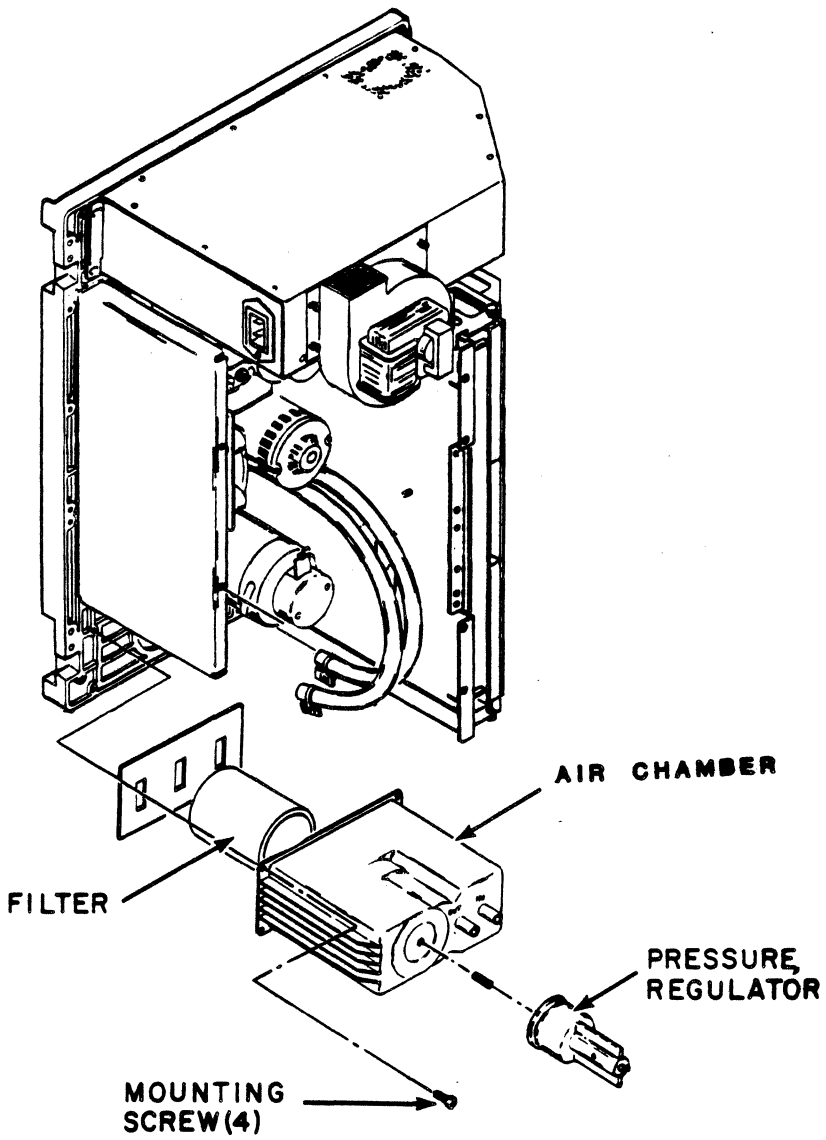


Figure 6-21. Regulator and Filter Removal

MAGNETIC HEAD REMOVAL/REPLACEMENT

Removal

1. Remove tape path and magnetic head covers from tape deck.

2. From front of transport, detach read head connector W6P1, write head connector W5P1, and erase head wires P3/P4 from magnetic head (see figure 6-23).

NOTE

Before removing the head, tape a piece of soft material across recording surface.

3. Loosen top and bottom thumb screws and slide read/write/ servo card set out to maintenance position (figure 6-31).

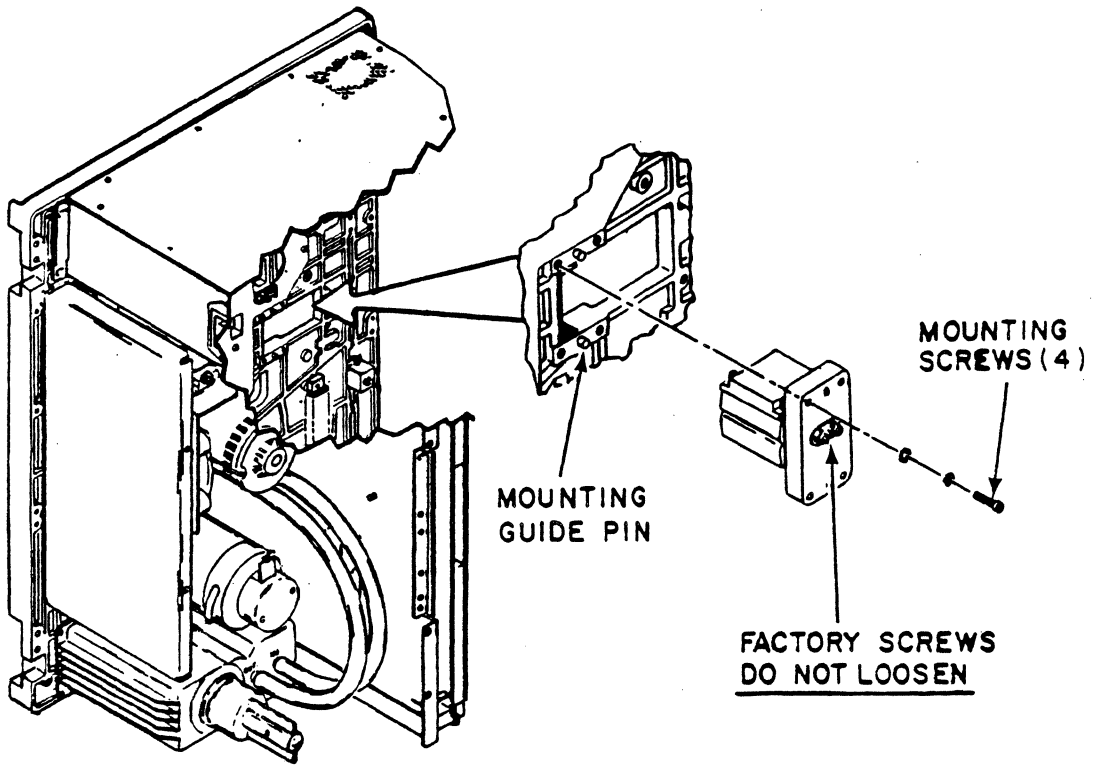


Figure 6-22. Magnetic Head Assembly

CAUTION

Refer to figure 6-22 for location of head mounting screws. DO NOT loosen head assembly screws, otherwise, entire head must be replaced by a new assembly.

4. Loosen four head mounting screws. Hold head against tape deck while removing four mounting screws, lockwashers, and flatwashers.

5. Carefully withdraw head from tape deck.

CAUTION

Check head mounting surface for plastic multi-color shims. If shims are present, remove them and attach shims to tape deck surface. Shims are part of tape deck, and should not be removed when read/write head is being replaced.

Replacement

NOTE

Before installing magnetic head, insure that recording surface is protected with soft material.

1. Install magnetic head through tape deck and position mounting surface onto guide pins.

2. While holding head in place, insert flatwashers, lockwashers, and mounting screws. Tighten four mounting screws.

3. Place read and write/erase cables through tape deck.

4. From front of tape deck, attach read, write, and erase connectors to magnetic head (see figure 6-23). Remove recording surface covering.

5. Install tape path and magnetic head covers on tape deck.

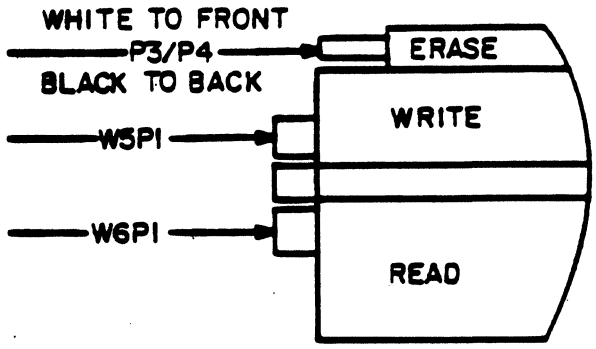


Figure 6-23. Magnetic Head Connectors

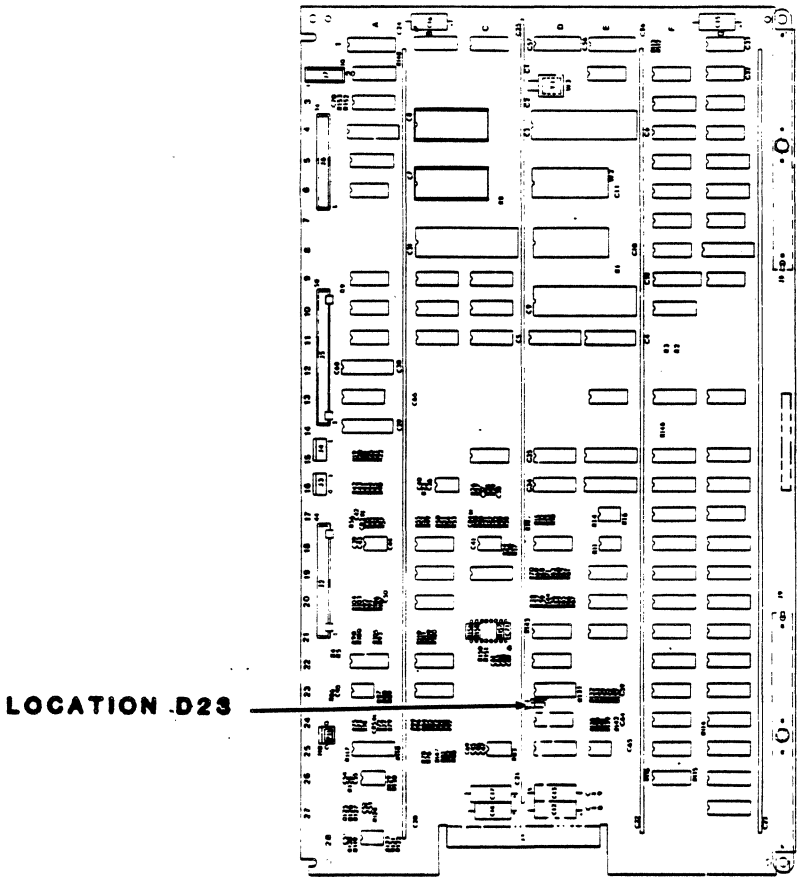


Figure 6-24. Servo-Control PWA

## Verification Check

1. Clean magnetic head recording surface with a soft lint-free cloth moistened with tape transport cleaner. Wipe recording surface in same direction as tape motion.

2. Move jumper plug at location D23 on servo-control PWA to the 1-2 position (see figure 6-24).

3. If a write-current label is attached to the magnetic head, execute test 54. If no write-current label is attached to the magnetic head, execute test 64.

4. Load a Graham Epoch 480 write-enabled tape.

5. Execute test 31. Test will complete with display 00.

6. Return jumper plug at location D23 from the 1-2 position to the 2-3 position before unit is powered down.

7. Return read/write/servo card set to operating position. While holding it in place, tighten top and bottom thumb screws to secure card set to card cage (figure 6-31).

8. With tape threaded, but not loaded, execute operator test 01. If test is successful, test will terminate with display 00. If test fails, refer display number to corresponding fault SAM.

OPERATOR PANEL REMOVAL/REPLACEMENT

Removal

1. From rear of transport, remove screw securing ground strap to tape deck (E2).

2. Release thumb screws securing PWA to logic cage and swing PWA to access component side of PWA.

3. Detach operator panel cable connector W8P1 from servo-control PWA.

4. Remove cable from clips located on rear of tape deck.

5. From front of transport, slip a small blade screwdriver between operator panel and operator panel housing and pry the operator panel open.

6. Remove operator panel and cable.

Replacement

1. Insert ground strap, W8 cable and control panel through tape deck and secure with four push-in clips.

2. Attach ground strap to E2 position on tape deck and connect W8P1 to servo-control PWA. Use cable clips on rear of tape deck to secure loose cable.

3. Place PWA in normal operating position and secure to logic cage bracket with top and bottom thumb screws. (Align screws with screw holes before attempting to tighten.)

Verification Check

1. Perform functional SAM 1001 thru 1003.

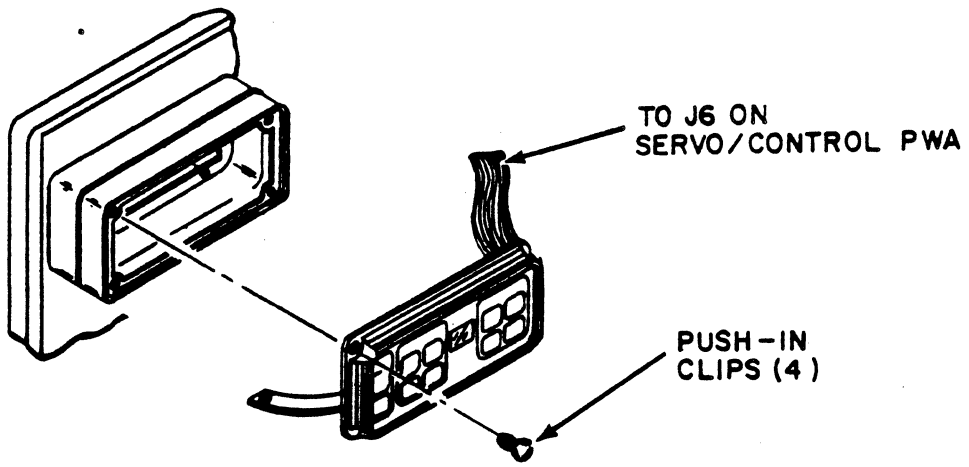


Figure 6-25. Operator Panel Assembly

COOLING FAN REMOVAL/REPLACEMENT

Removal

1. Detach cooling fan connector from power supply.

2. Remove four hex nuts and washers and remove the cooling fan from the mounting studs.

Replacement

1. Perform Removal procedure in reverse order.

Verification Check

1. Power transport on and check for air flow from fan.

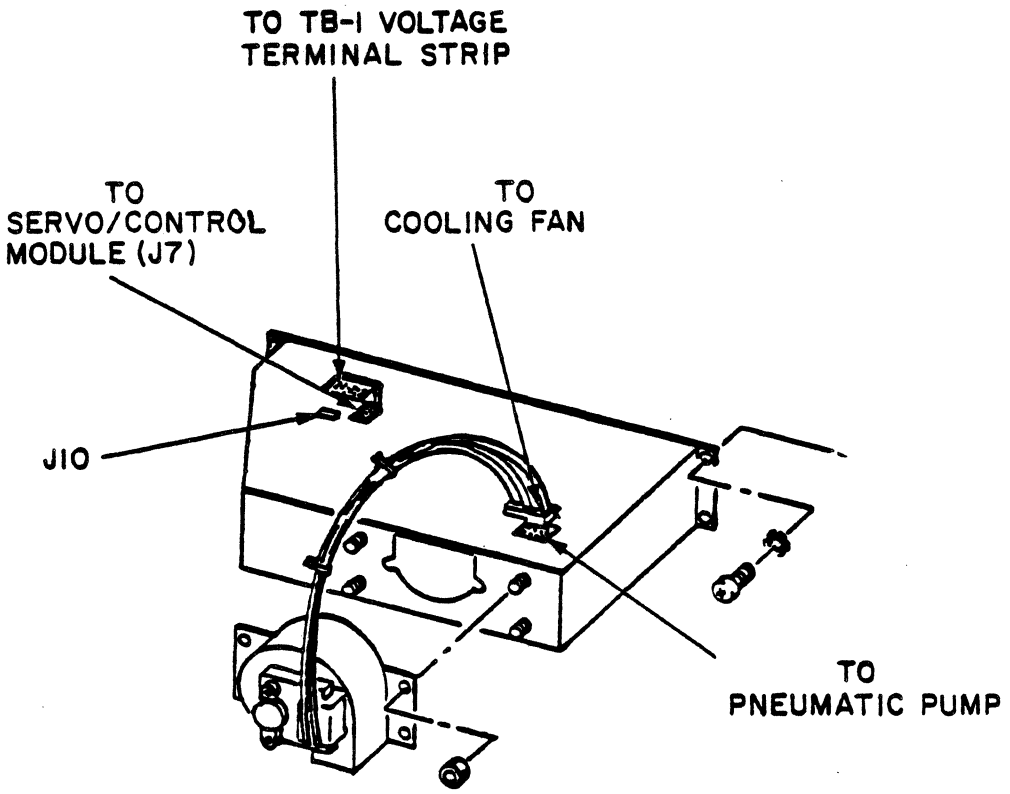


Figure 6-26. Cooling Fan and Power Supply

POWER SUPPLY REMOVAL/REPLACEMENT

Removal

1. Disconnect power cord from power supply.

2. Perform cooling fan Removal.

3. Detach connectors from power supply.

CAUTION

A power supply weighs approximately 6.8 Kg (15 lbs).

4. While holding power supply in position, remove mounting screws. Lift power supply away from transport.

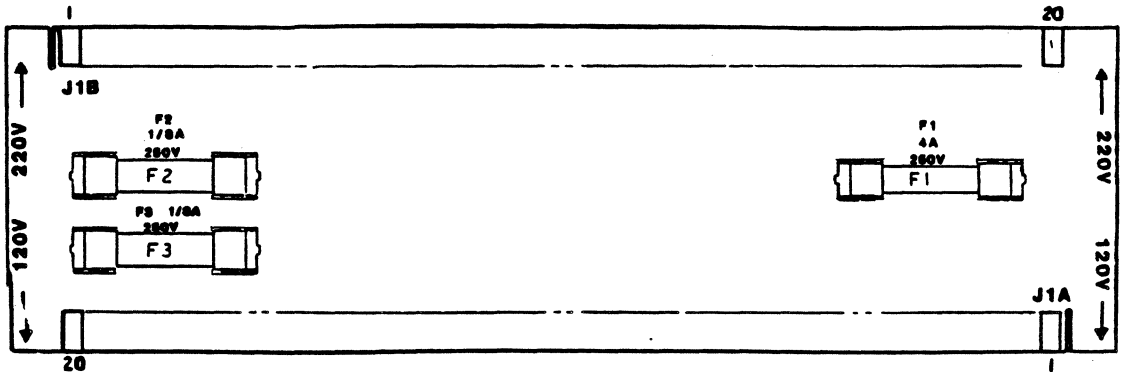


Figure 6-27A. Voltage Select Card
(7701896X Series Power Supply)

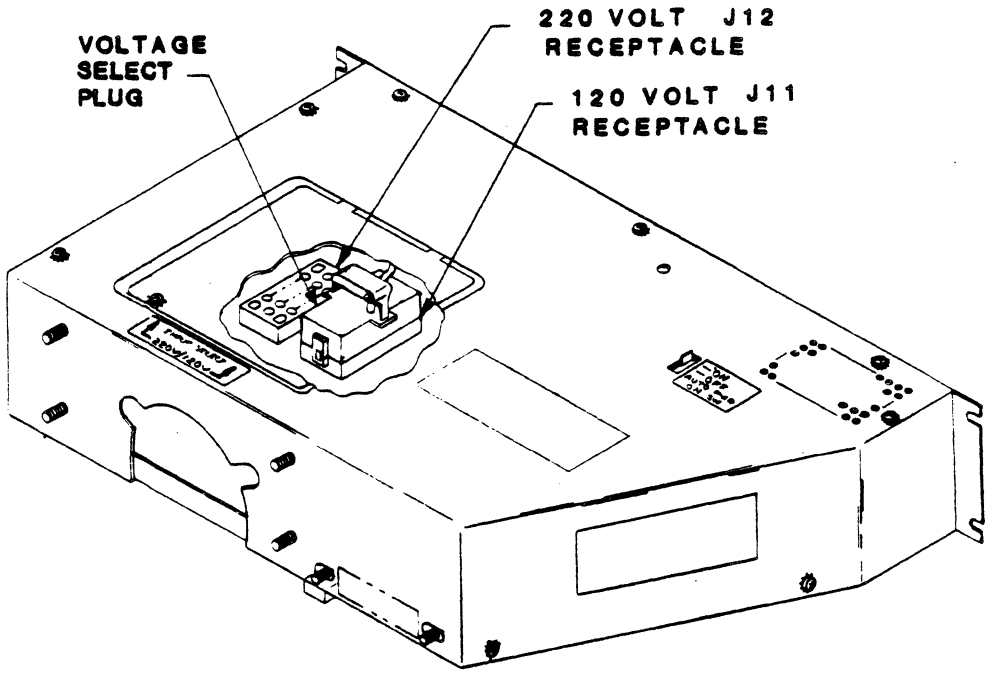


Figure 6-27B. Voltage Select Plug ((7702934X Series Power Supply)

Replacement - 7701896X Series Power Supplies

NOTE

If a new power supply is being installed, remove cover from new power supply and observe position of voltage select PWA (figure 6-27A). The position of this PWA must correspond to input voltage as defined on equipment identification plate. The ends of the PWA are stencilled with "120V" and "220V" and indicating arrows. Make sure PWA is connected to match input voltage. The PWA can be disconnected, turned upside down, and reconnected to main power supply PWA if required.

Replacement - 7702934X Series Power Supplies

NOTE

If a new power supply is being installed, remove voltage select access panel from new power supply and observe position of voltage select plug (figure 6-27B). The position of this plug must correspond to input voltage as defined on equipment identification plate. Make sure plug is inserted in correct voltage receptacle, that is, J11 for 120V operation or J12 for 220-240 operation. Secure voltage select access panel with two screws. Check position of "AUTO POWER-ON SWITCH". Make sure it is in the "OFF" position.

1. With power supply held in position, insert washers and mounting screws and tighten.
2. Attach connectors W4P4, W2P1, and W7P1 to the power supply.
3. Perform cooling fan Replacement procedure.
4. Connect power cord to power supply.

Verification Check

1. DC Voltage Checks - Using a digital voltmeter for all dc voltage measurements, connect ground lead of meter to pin 4 of power terminal block TB-1 (see figure 6-28). Connect other meter lead to points listed to test all DC voltages.

## DC VOLTAGES AND TOLERANCES

| LOCATION | VOLTAGE | TOLERANCE |
|---|---|---|
| P1-6* | -6V | ± 10% (-5.4 to -6.6) |
| P1-5* | +5V | + 2% (+5.00 to +5.10)<br>- 0% |
| P1-2* | -15V | ± 10% (-13.5 to -16.5) |
| P1-3* | +15V | ± 10% (+13.5 to +16.5) |
| P1-8* | +25V | ± 10% (+22.5 to +27.5) |
| P4-6** | +38V | + 20% (+45.6 to +34.2)<br>- 10% |
| J10-2*** | -5.2V | ± 10% (-4.7 to -5.7) |

* P1 is the power connector on the servo-control PWA.
** P4 is the power connector on the power driver. Servo must be running.
*** J10 is the 2-pin power connector on the power supply.

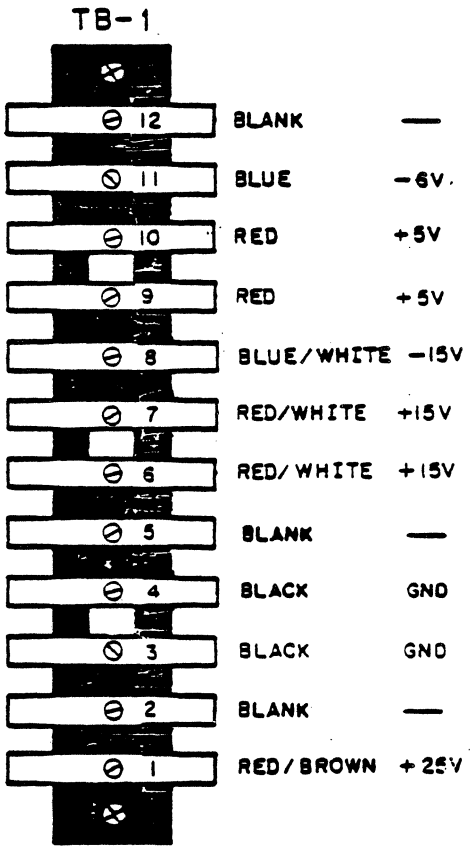


Figure 6-28. Power Terminal Strip TB-1

## CAPACITOR REMOVAL/REPLACEMENT

### Removal

1. Remove drive cover.
2. Remove capacitor connector from J5 of the power driver PWA.
3. Insert a screwdriver through the access hole and loosen the screw holding the capacitor in the retainer. Remove the capacitor from the retainer (see figure 6-29).

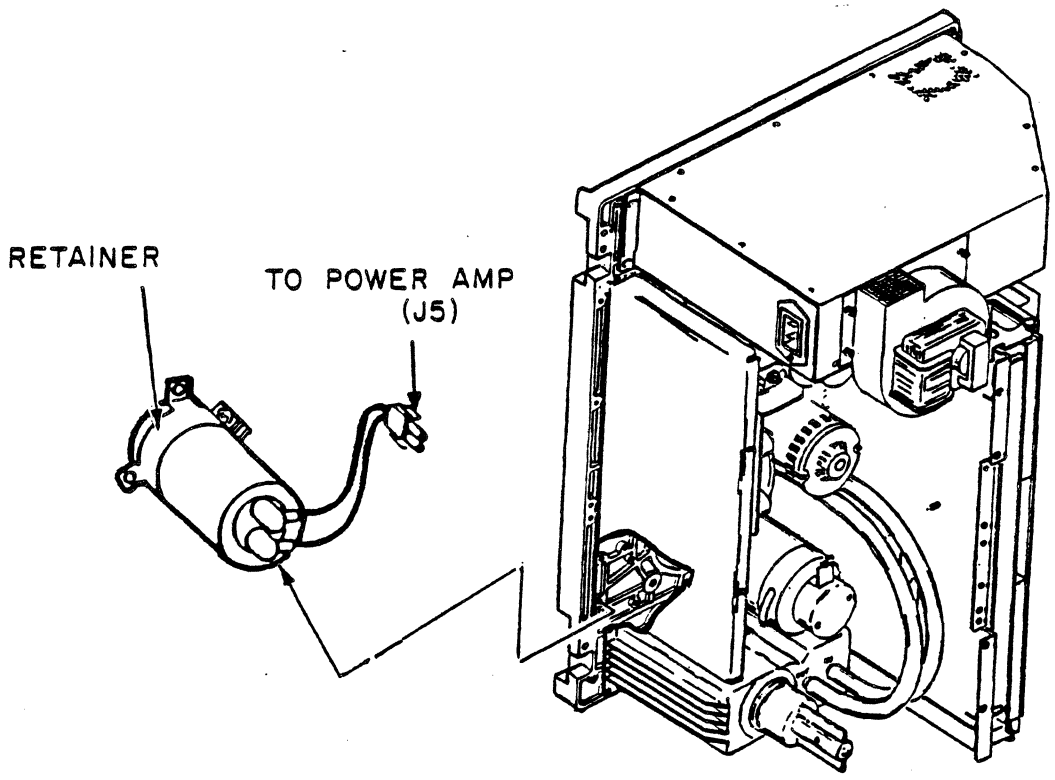


Figure 6-29. Capacitor

Removal (Cont'd)

NOTE

The capacitor loses it charge within four seconds after transport power is removed.

Replacement

1. Install the connector wires to the same capacitor terminal location as the original. Slide the protective caps over the terminals.
2. Place the capacitor in the retainer. Insert a screwdriver through the access hole and tighten the retainer screw until the capacitor is secured.
3. Install the capacitor connector in J5 of the power driver module.
4. Replace the drive cover.

Verification Check

1. Thread tape. Do not load. Execute operator diagnostic test 01.

## WRITE DRIVER REMOVAL/REPLACEMENT

### Removal

1. Remove connectors W7P6, W5P2, and W12P1 (see figure 6-30).

2. Remove four pan head screws holding the write driver PWA to the plastic standoffs and remove write driver PWA.

### Replacement

1. Mount the write driver PWA on the plastic standoff using four pan head screws.

2. Install connectors:

   J4 - W5P2
   J6 - W12P1
   J7 - W7P6

NOTE

It may be necessary to turn connector W7P6 over to mate the W7P6 contacts with the J7 contacts. Due to a change in the write driver printed wiring board, the contact points of J7 were moved from the foil side of the board to the component side. Connector W7P6 may be used with either PWB; make a visual check to be sure that W7P6 is properly oriented with respect to the contacts of J7.

### Verification Check

1. Load a Graham Epoch 480, or equivalent, write-enabled tape.

2. Move the jumper plug at location D23 on servo-control PWA to the 1-2 position.

3. Execute test 64. If test is successful, test will terminate with display 00. If test fails, refer display number to test description in test 64.

4. After test is complete (display 00), return the jumper plug to the 2-3 position before powering down.

5. With tape threaded, but not loaded, execute operator test 01. If test is successful, test will terminate with display 00. If test fails, refer display number to corresponding fault SAM.

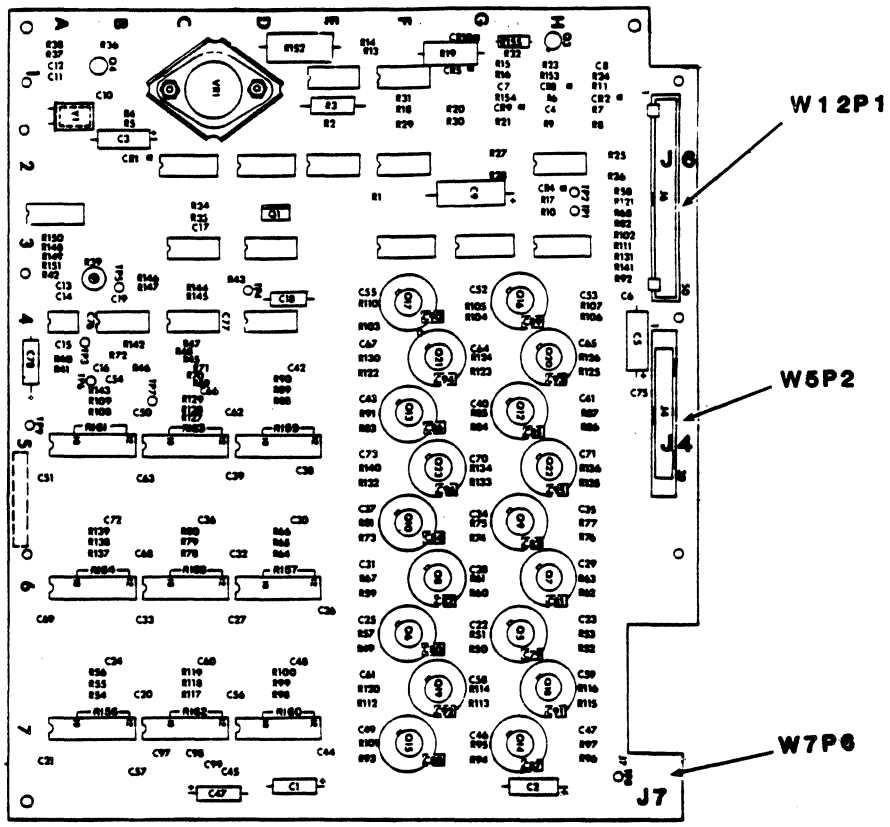


Figure 6-30. Write Driver PWA Connectors

READ AMPLIFIER REMOVAL/REPLACEMENT

Removal

1. Perform the write driver PWA Removal procedure.

2. Loosen the top and bottom thumb screws securing the servo/read/write card set to the card cage (figure 6-31).

3. Slide out and reposition card set to maintenance position. Remove yellow fastener clips from top and bottom of card set (figure 6-31).

4. Remove connectors W6P2, W7P4, W7P5, W12P2, and W12P3 from Read Amplifier PWA (see figure 6-32).

5. Loosen the two thumb screws (figure 6-34) and separate the Read Amplifier PWA from the Servo Control PWA. Avoid undue stress on the PWA by loosening the thumb screws alternately and separating the PWAs as the screws are loosened.

6. Loosen and back out only the bottom screws (see figure 6-34) of each hinge 6 to 8 turns. Loosen the top screws one-half turn (Do Not remove). Hold the PWA in place while loosening the screws.

7. Remove the read amplifier PWA from the card set.

Replacement

1. Insert the PWA into the slots in the top and bottom hinges of the card set. Make sure the PWA is fully inserted into the hinge slot.

2. Attach the outside pin connectors of both PWAs and secure with the two thumb screws.

3. Insert the bottom screw of top and bottom hinges to lock the PWA into position. Make sure all four hinge screws are snug.

4. Install connectors to the PWA as follows:

   J1 - W7P4
   J5 - W6P2
   J6 - W12P2
   J8 - W7P5
   J9 - W12P3

5. Perform the write driver Replacement procedure.

6. Reinstall yellow fastener clips on top and bottom of card set (figure 6-31).

Verification Check

1. Load a Graham Epoch 480, or equivalent, write-enabled tape.
2. Move jumper at location D23 on servo-control PWA to the 1-2 position.
3. Execute test 31. If test is successful, test will terminate with display 00. If test fails, refer display number to test description for test 31.
4. After test is complete (display 00), return jumper plug to the 2-3 position before powering down.
5. Return read/write/servo card set to operating position. While holding it in place, tighten top and bottom thumb screws to secure card set to card cage (figure 6-31).
6. With tape threaded, but not loaded, execute operator test 01. If test is successful, test will terminate with display 00. If test fails, refer display number to corresponding fault SAM.

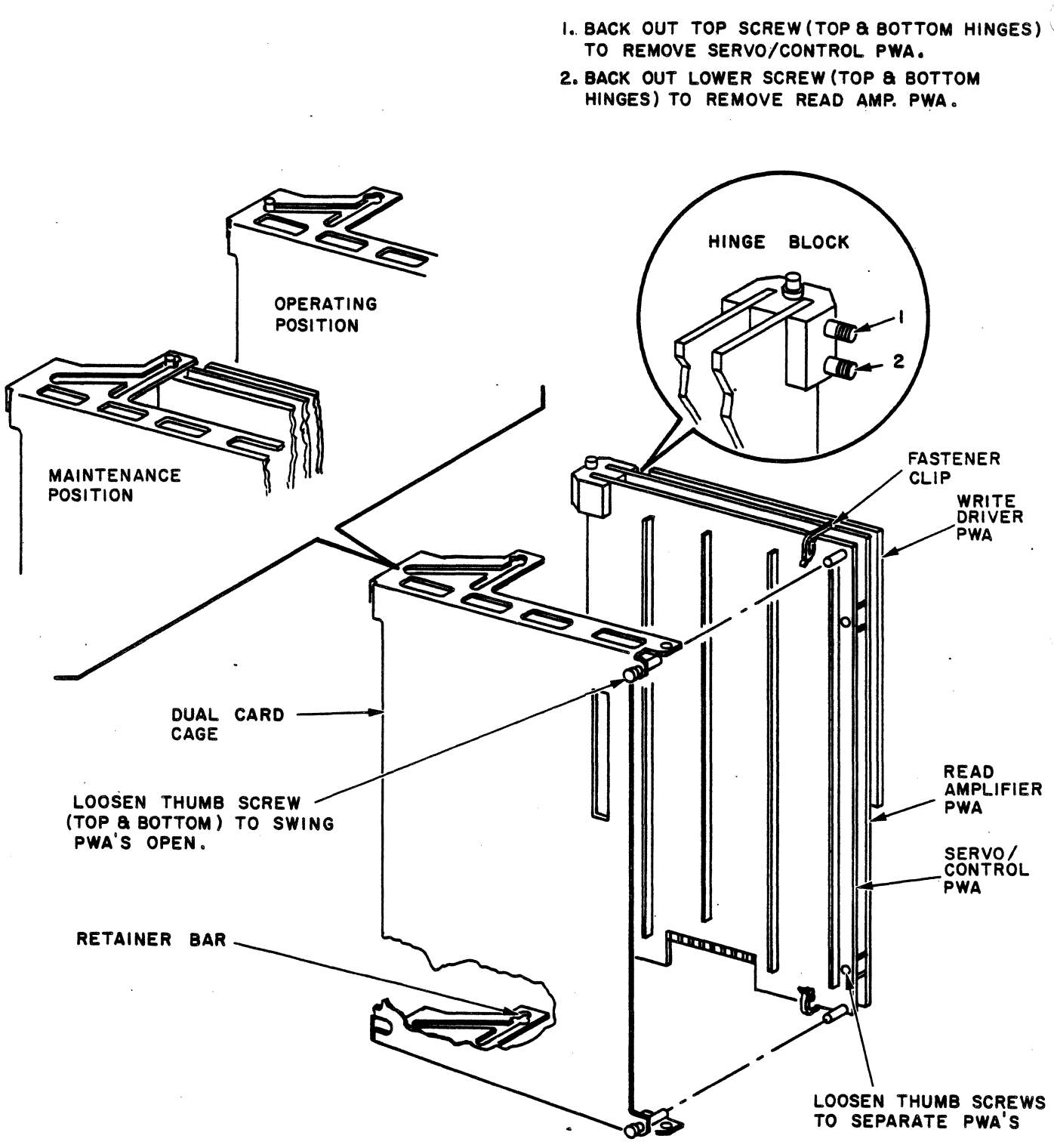


Figure 6-31. Write Driver/Read Amp/Servo-Control PWAs

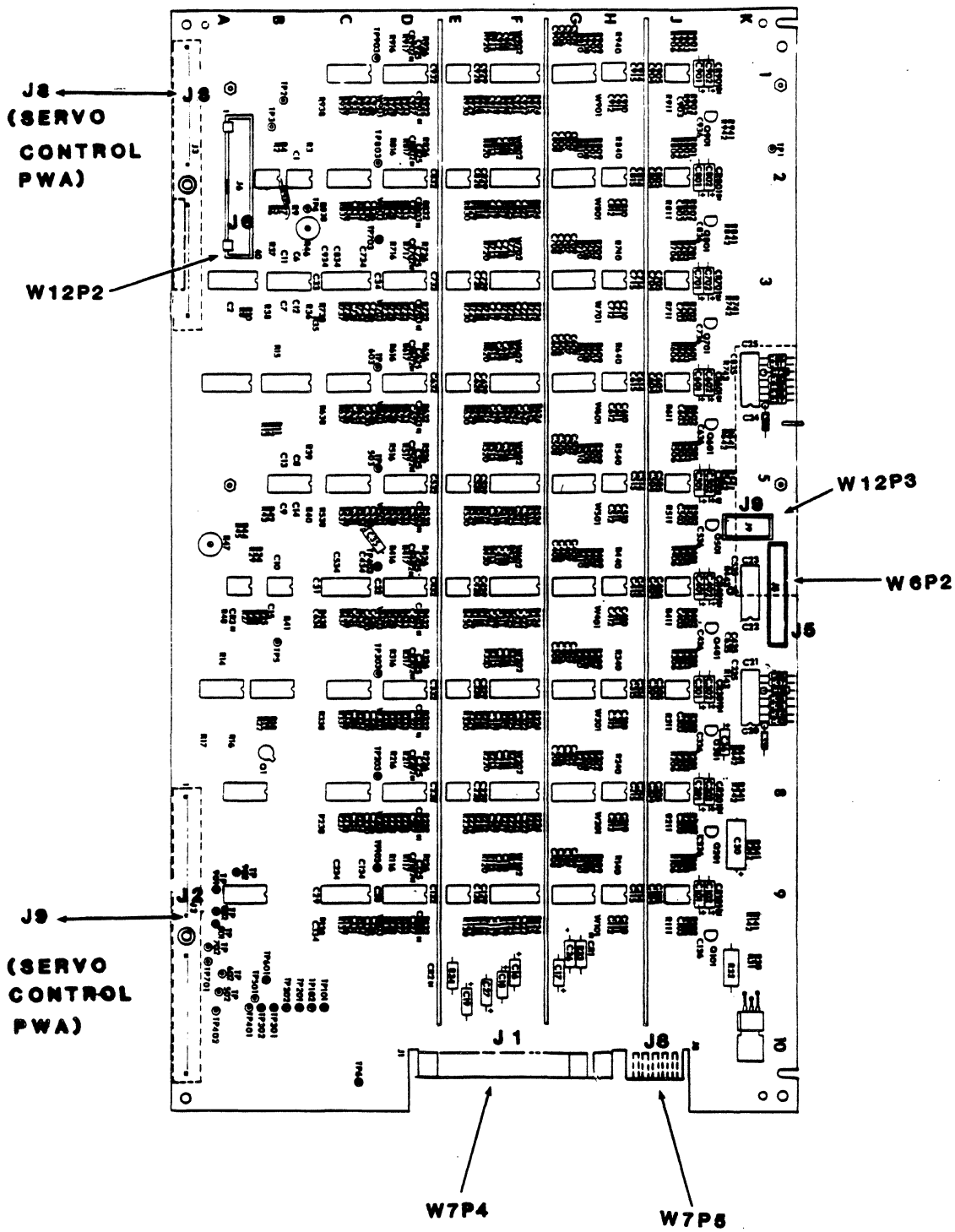


Figure 6-32. Read Amplifier PWA Connectors

NOTE

Replacement of the servo-control PWA requires execution of the following set-up tests:

| | |
|---|---|
| Test 37 | Set Up Velocity Correction Multipliers |
| Test 48 | Enable Compressor Power-Down Timer |
| Test 84 | Select/Examine STU Options (buffered enhanced I/F only) |
| Test 64 | Auto-Write Current Level Adjustment |
| Test 31 | Set Up and Check Read Amplitudes at 25 and 75 ips |

Execution of test 37 affects the tests 81 and 84 as follows:

Test 81 (Select Early EOT Point) is set to 50 feet. Test 84 (Select/Examine STU Options) - The EEPROM is initialized and all display bits cleared to 0.

In order to return the STU to service with original option selection intact, it is necessary to perform step 1 of the removal procedure and steps 4 and 11 of the verification check.

Removal

1. Determine and record the option selections set by tests 81 and 84.
2. Loosen the top and bottom thumb screws securing the servo/read/write/card set to the card cage.
3. Slide card set out to maintenance position. Remove yellow fastener clips from top and bottom of card set (figure 6-31).
4. Disconnect connectors W2P1, W8P1, W10P1, W1P2, W9P2, W7P4, and W3P8 from servo-control PWA (see figure 6-33).
5. Loosen the two thumb screws (figure 6-31) and separate the servo-control PWA from the read amplifier PWA. Avoid undue stress on the PWA by loosening the thumb screws alternately and separating the PWA as the screws are loosened.
6. Loosen and back out only the top screws (see figure 6-31) of each hinge. Loosen the bottom screws one-half turn (do not remove). Hold the PWA in place while loosening the screws.

Replacement

1. Insert the PWA into the slots in the top and bottom hinges of the card set. Make sure the PWA is fully inserted into the hinge slot.

2. Attach the outside pin connectors of both PWAs and secure with the two thumb screws.

3. Insert the top screw of the top and bottom hinges to lock the PWA into position. Make sure all four hinge screws are snug.

4. Install connectors to the PWA as follows:

   J2-W3P8
   J3-W9P2
   J4-W1P2
   J5-W10P1
   J6-W8P1
   J7-W2P1
   J1-W7P4

   NOTE

   If connectors J3/W9P1 and J4/W1P1 are not keyed, insert the connectors so that pins 1, 2, 3 and 4 of W9P1 mate with pins 4, 3, 2 and 1 respectively of J3, and pins 1, 2, 3 and 4 of W1P1 mate with pins 4, 3, 2 and 1 respectively of J4.

5. Reinstall yellow fastener clips on top and bottom of card set (figure 6-31).

## Verification Check

1. Move jumper plug at location D23 on servo-control PWA to the 1-2 position.

2. With tape not threaded, execute test 37. If test is successful, test will terminate with display 00. If test fails, refer display number to test description for test 37.

3. With tape not threaded, execute test 48. If test is successful, test will terminate with display 00. If test fails, refer display number to test description for test 48.

4. Refer to the option selection recorded in step 1 of the Removal procedure. Execute test 84 as necessary to restore the original option selection.

5. Load a Graham Epoch 480, or equivalent, write-enabled tape.

6. Execute test 64. If test is successful, test will terminate with display 00. If test fails, refer display number to test description for test 64.

7. Execute test 31. If test is successful, test will terminate with display 00. If test fails, refer display number to test description for test 31.

8. After test is complete (display 00), return jumper plug to the 2-3 position before powering down.

9. Return read/write/servo card set to operating psition. While holding it in place, tighten top and bottom thumb screws to secure card set to card cage.

10. Refer to the option selections recorded in step 1 of the Removal procedure. Execute test 81 as necessary to restore the original option selection.

11. With tape threaded, but not loaded, execute operator test 01. If test is successful, test will terminate with display 00. If test fails, refer display number to corresponding fault SAM.

Verification Check

1. Move jumper plug at location D23 on servo-control PWA to the 1-2 position.

2. With tape not threaded, execute test 37. If test is successful, test will terminate with display 00. If test fails, refer display number to test description for test 37.

3. With tape not threaded, execute test 48. If test is successful, test will terminate with display 00. If test fails, refer display number to test description for test 48.

4. Refer to the option selection recorded in step 1 of the Removal procedure. Execute test 84 as necessary to restore the original option selection.

5. Load a 3M777, or equivalent, write enabled tape.

6. Execute test 64. If test is successful, test will terminate with display 00. If test fails, refer display number to test description for test 64.

7. Execute test 31. If test is successful, test will terminate with display 00. If test fails, refer display number to test description for test 31.

8. After test is complete (display 00), return jumper plug to the 2-3 position before powering down.

9. Return read/write/servo card set to operating psition. While holding it in place, tighten top and bottom thumb screws to secure card set to card cage.

10. Refer to the option selections recorded in step 1 of the Removal procedure. Execute test 81 as necessary to restore the original option selection.

11. With tape threaded, but not loaded, execute operator test 01. If test is successful, test will terminate with display 00. If test fails, refer display number to corresponding fault SAM.

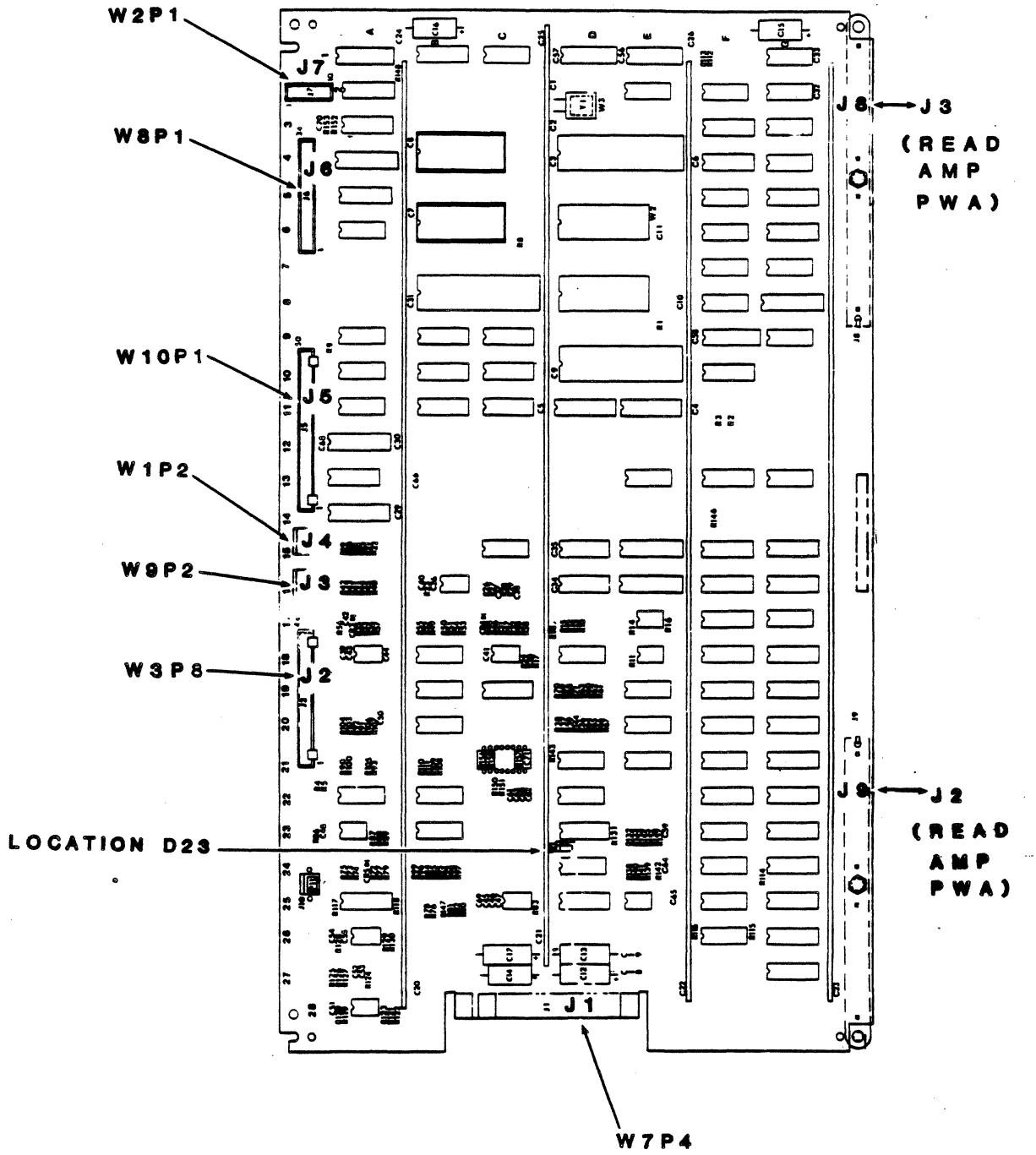


Figure 6-33. Servo-Control PWA Connectors

## FORMATTER READ REMOVAL/REPLACEMENT

### Removal

1. Loosen top and bottom thumb screws and slide card set out until detents in top and bottom slide brackets engage with front of card cage. Pull card set out further until plastic snaps on card hinges engage with front of slide brackets (figure 6-34).

2. Remove yellow fastener clips from top and bottom of formatter card set (figure 6-34).

3. Loosen the two thumb screws (figure 6-34) to separate the formatter read PWA from the formatter write PWA. Avoid undue stress on the on-board pin connectors J2 and J3 by loosening the thumb screws alternately and separating the PWAs as the screws are loosened. See figure 6-36.

4. Loosen and back out 6 to 8 turns the bottom screws (see figure 6-34) of each hinge. Loosen top screws one-half turn (do not remove). Hold PWA in place while loosening screws.

5. Disconnect the formatter read PWA from the DC power connector W7P3 and remove the PWA from the card set.

### Replacement

1. Insert PWA into slots in top and bottom hinges into DC power connector W7P8. Make sure W7P8 is snug on both PWAs.

2. Attach the on-board pin connectors J2 and J3 of both PWAs by squeezing top corners of the two PWAs and then tightening the top thumb screws. Repeat for the lower corner.

3. Insert the bottom screw of top and bottom hinges to lock the PWA into position. Make sure all four hinge screws are snug.

4. Reinstall yellow fastener clips on top and bottom of formatter card set (figure 6-34).

5. Depress plastic snaps on top and bottom hinges of card set and slide card set in three inches. Release detents in top and bottom slide brackets and slide card set back into card cage. Tighten top and bottom thumb screws to card cage (figure 6-34).

### Verification Check

1. With tape threaded, but not loaded, execute operator test 01. If test is successful, test will terminate with display 00. If test is fails, refer display number to corresponding fault SAM.

1. RELEASE PLASTIC SNAP TOP AND BOTTOM
2. PUSH IN THEN RELEASE METAL SNAP TOP AND BOTTOM.
3. RESUME PUSH.

1. BACK OUT SCREWS (TOP & BOTTOM) TO REMOVE INTERFACE PWA.
2. BACK OUT SCREWS (TOP & BOTTOM) TO REMOVE FORMATTER READ PWA.
3. BACK OUT SCREWS (TOP & BOTTOM) TO REMOVE FORMATTER WRITE PWA.
4. TAB MUST BE DEPRESSED TO REINSERT PWA SET.

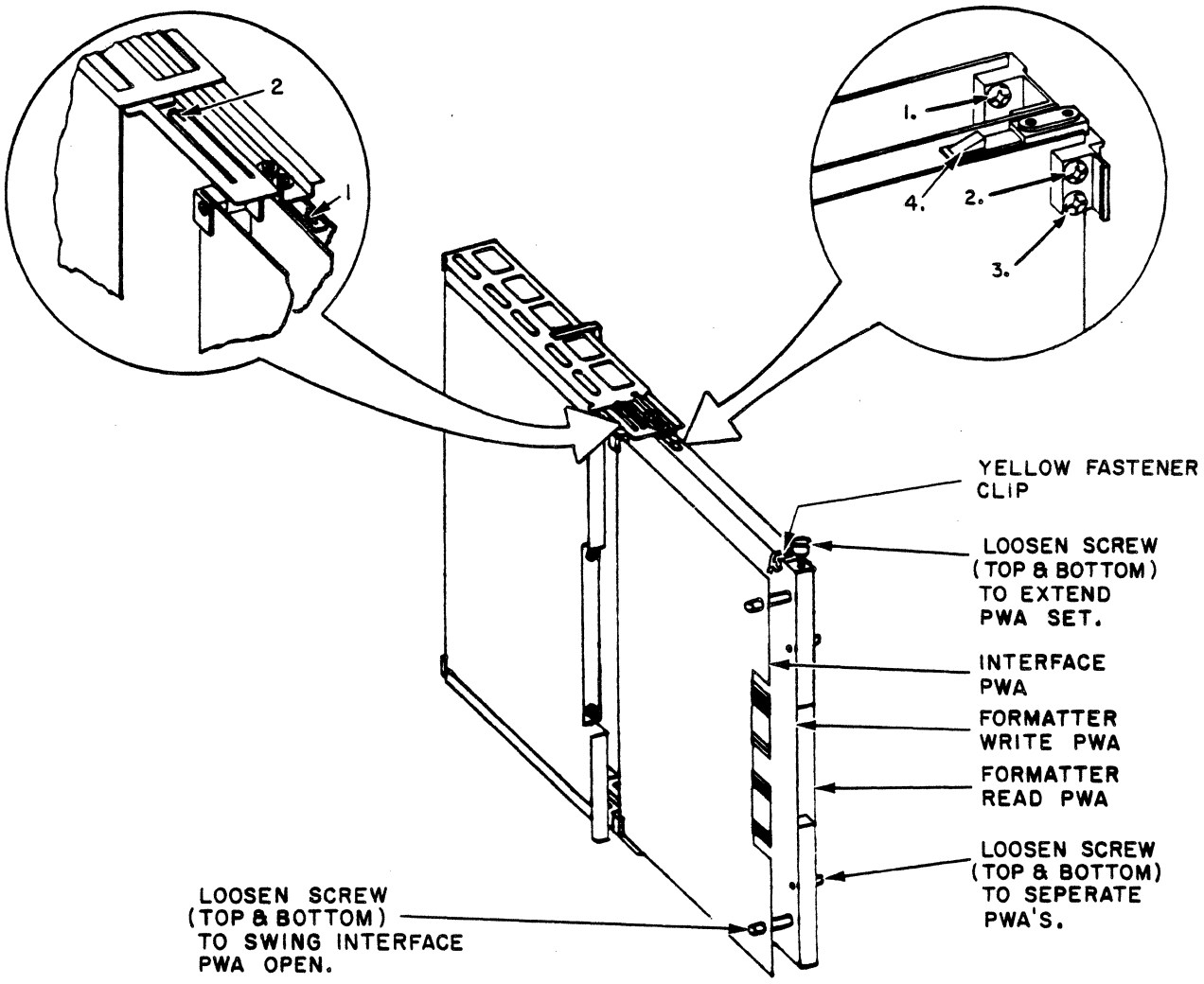


Figure 6-34. Formatter Read/Write/Interface PWAs

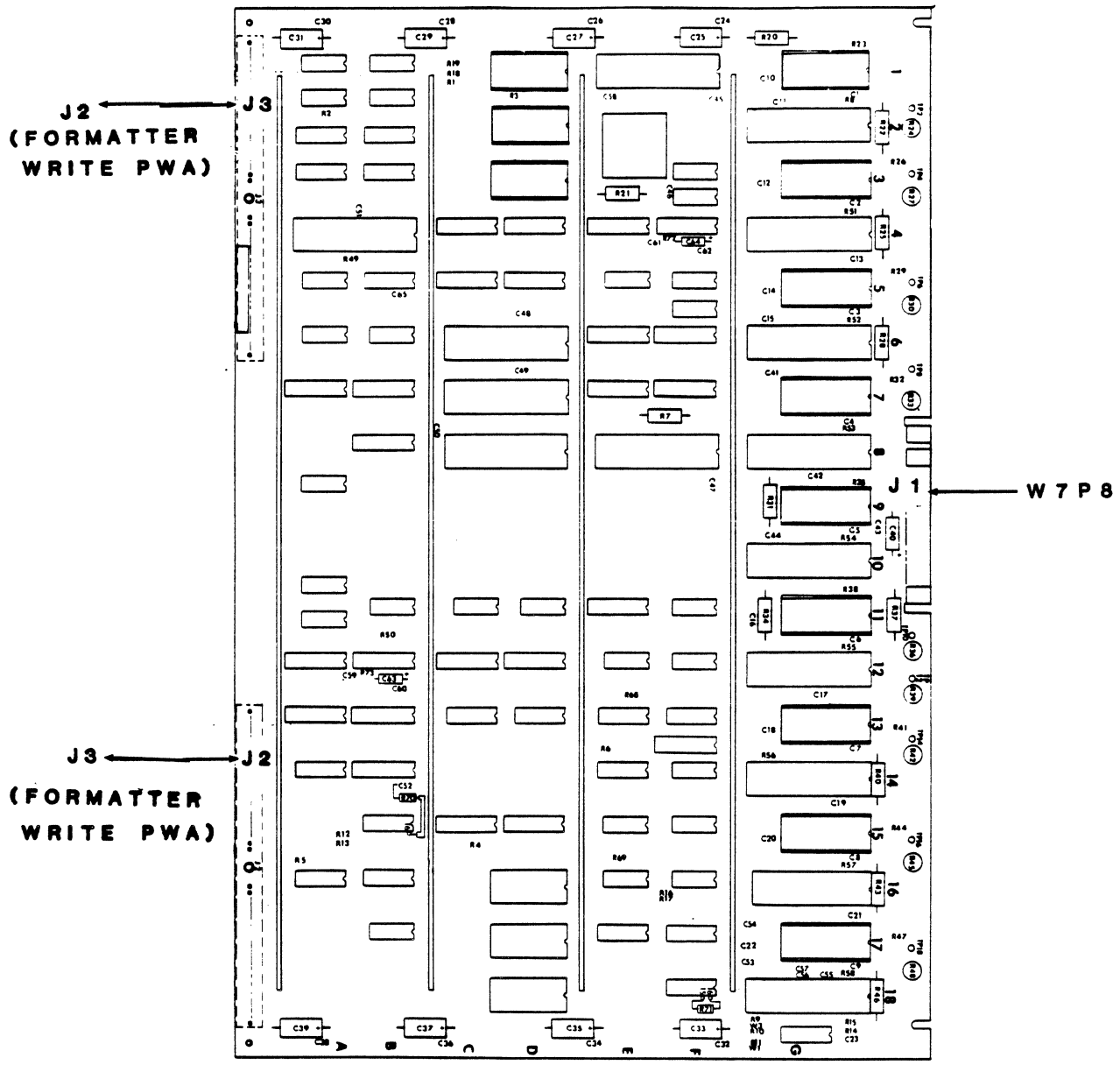


Figure 6-35. Formatter Read PWA Connectors

## FORMATTER WRITE REMOVAL/REPLACEMENT

### Removal

1. Loosen top and bottom thumb screws and slide card set out until detents in top and bottom slide brackets engage with front of card cage. Pull card set out further until plastic snaps on card set hinges engage with front of slide brackets (figure 6-34).

2. Remove yellow fastener clips from top and bottom of formatter card set (figure 6-34).

3. Unscrew top and bottom thumb screws (figure 6-34) securing interface PWA to the formatter write PWA.

4. Remove connectors W10P2 and W11P1 from the PWA (figure 6-36).

5. Loosen the two thumb screws (figure 6-34) to separate the formatter read PWA from the formatter write PWA. Avoid undue stress on the PWA by loosening the thumb screws alternately and separating the PWAs as screws are loosened.

6. Loosen and back out only the top screws (see figure 6-34) of each hinge. Loosen the bottom screws one-half turn (do not remove). Hold the PWA in place while loosening the screws.

7. Disconnect the formatter write PWA from the DC power connector W7P8 and remove the PWA from the card set.

### Replacement

NOTE

Before installing the new PWA, ensure that the jumper blocks (W1, W2, W3) at PWA locations A1 and B1 are in the same position as on the replaced PWA.

1. Insert the PWA into the slots in the top and bottom hinges and into the DC power connector W7P8. Make sure W7P8 is snug on both PWAs.

2. Attach the outside pin connectors of both PWAs and secure with the two thumb screws.

3. Insert the bottom screw of the top and bottom hinges to lock PWA into position. Make sure all four hinge screws are snug.

Replacement (Cont'd)

4. Attach connectors W10P2 to J5 and W11P1 to J4 on the PWA.

5. Secure the formatter write PWA to the formatter read PWA, and the interface PWA to the formatter write PWA by using the thumb screws (figure 6-34).

6. Reinstall yellow fastener clips on top and bottom of formatter card set (figure 6-34).

7. Depress the plastic snaps on the top and bottom hinges of the card set and slide the card set in three inches. Release the detents in the top and bottom slide brackets and slide the card set back into the card cage. Tighten the top and bottom thumb screws to the card cage (figure 6-34).

Verification Check

1. With tape threaded, but not loaded, execute operator test 01. If test is successful, test will terminate with display 00. If test fails, refer display number to corresponding fault SAM.

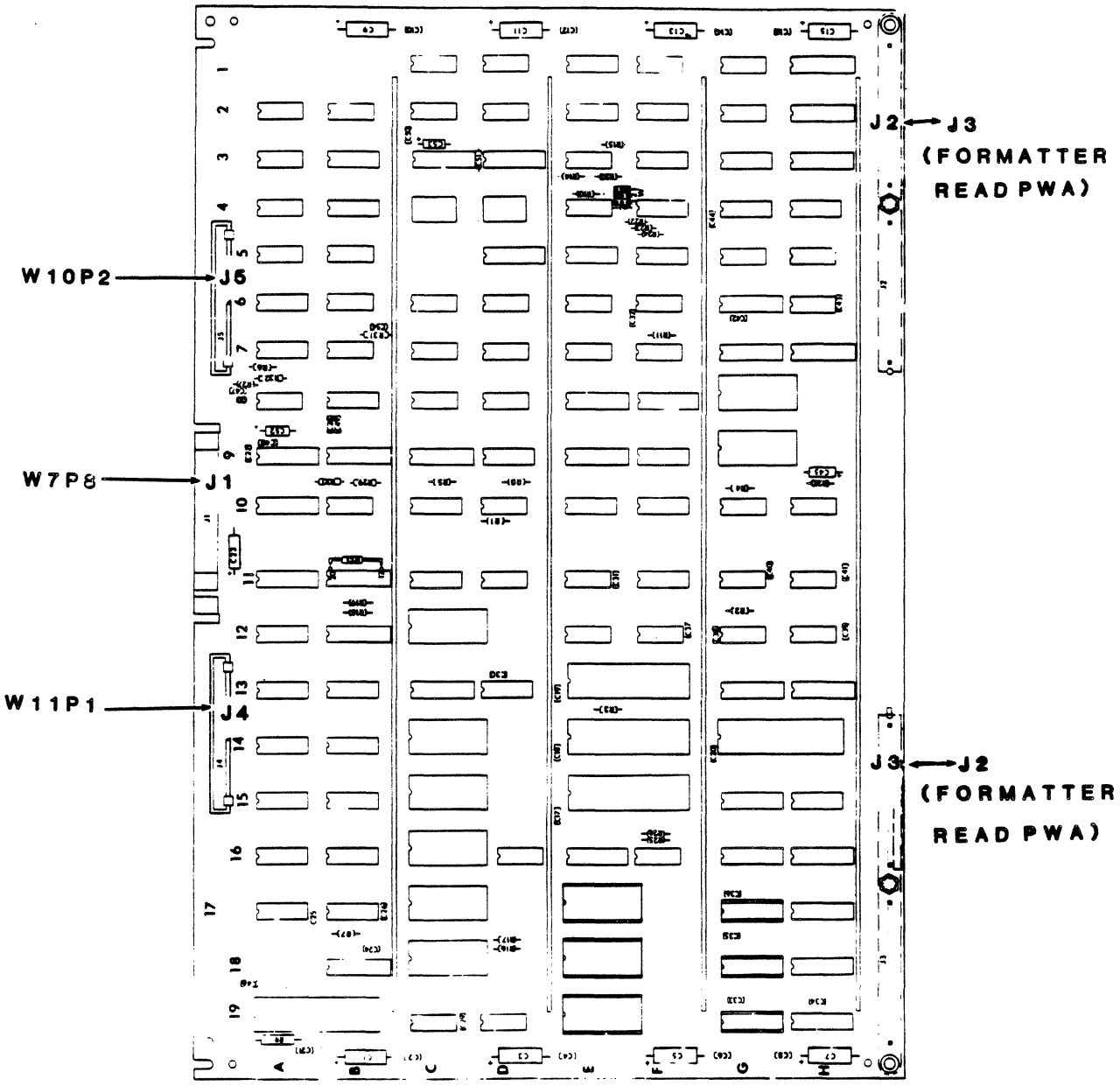


Figure 6-36. Formatter Write PWA Connectors

INTERFACE REMOVAL/REPLACEMENT

Removal

1. Loosen top and bottom thumb screws and slide card set out until detents in top and bottom slide brackets engage with front of card cage. Pull formatter card set out further with plastic snaps on card set hinges engage with front of slide brackets (figure 6-34).

2. Unscrew upper and lower thumb screws (figure 6-34) securing the interface PWA to the formatter write PWA.

3. Disconnect connectors W7P9 and I/O cables at J2 and J3 from the interface PWA. Disconnect connector W11P1 from J4 on the formatter write PWA (figure 6-37).

4. Remove the top and bottom screws from the hinges (figure 6-34) and remove the PWA from the card set.

NOTE

Before installing new interface PWA, ensure jumpers and switches are in same position as those in replaced PWA.

Replacement

1. Insert PWA in upper and lower hinges and secure with two screws.

2. Install cable connectors as follows:
   W7P9 - J1
   W11P1 - J4 on formatter write PWA

3. Tighten upper and lower thumb screws to secure the interface PWA to the formatter write PWA.

4. Depress plastic snaps on top and bottom hinges of formatter card set and slide card set in three inches. Release detents in top and bottom slide brackets and slide card set back into card cage. Tighten top and bottom thumb screws to card cage (figure 6-34).

5. Reconnect I/O cables.

Verification Check

1. Apply dc power to the drive to execute the Interface Health Check. If check is successful, check will terminate with display 00. If test fails, refer display number to corresponding fault SAM.

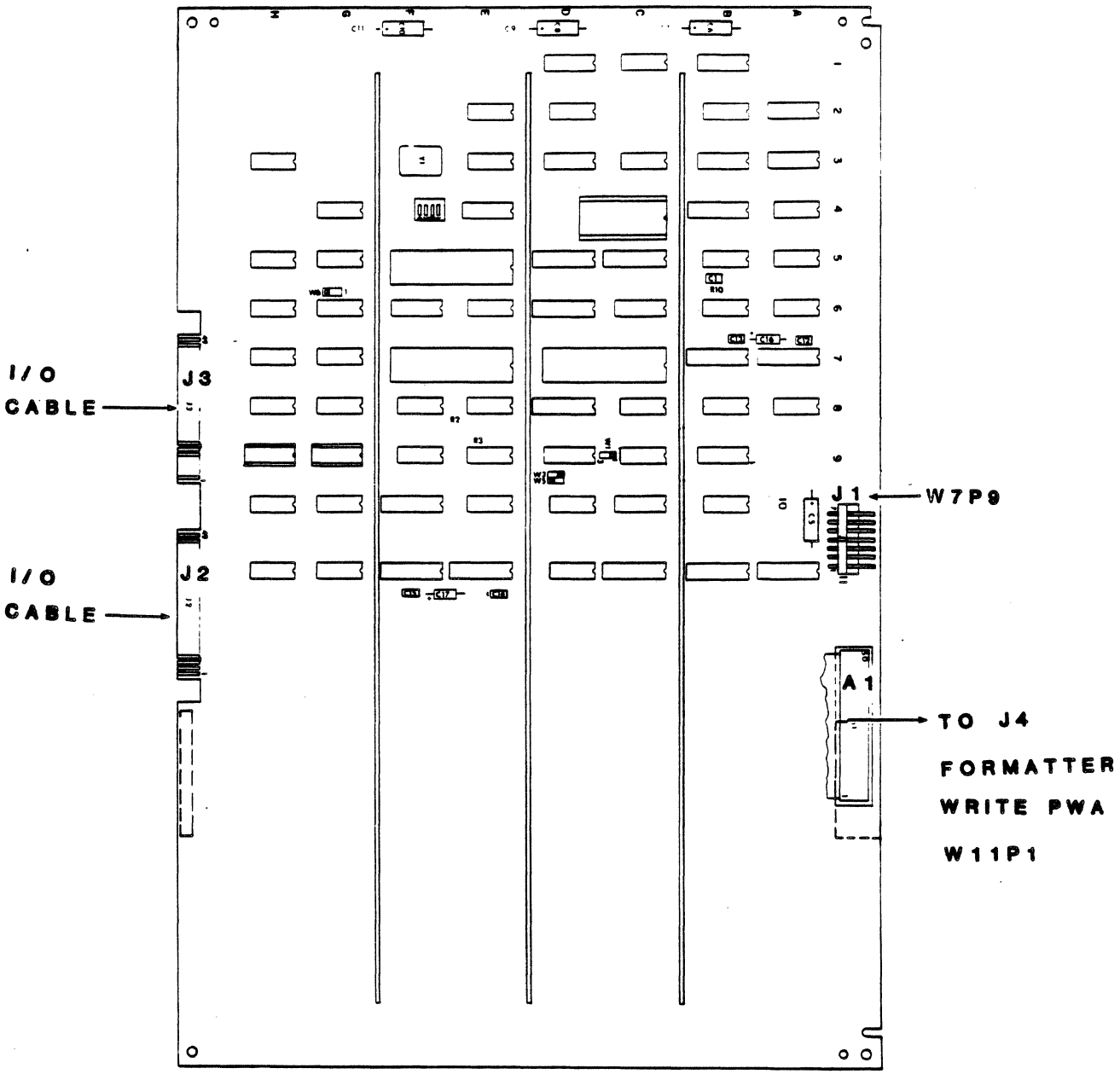


Figure 6-37. Interface PWA Connectors

## POWER DRIVER REMOVAL/REPLACEMENT

### Removal

1. Detach the following connectors from power driver PWA (see figure 6-38):

   J1 - B3P1
   J2 - W3P7
   J3 - B1P1
   J4 - W7P7

2. Remove power driver cover by removing two screws.

3. Remove three screws along outside edge of PWA to release PWA from mounting assembly. Remove PWA.

### Replacement

1. Insert power driver PWA into mounting assembly. The inside of mounting assembly has metal slots to receive PWA.

2. Secure PWA by installing three screws along outside edge.

3. Install cover assembly and secure with two pan head phillips locking screws.

4. Install connectors as follows:

   J1 - B3P1
   J2 - W3P7
   J3 - B1P1
   J4 - W7P7

### Verification Check

1. With tape threaded, but not loaded, execute operator test 01. If test is successful, test will terminate with display 00. If test fails, refer display number to corresponding fault SAM.

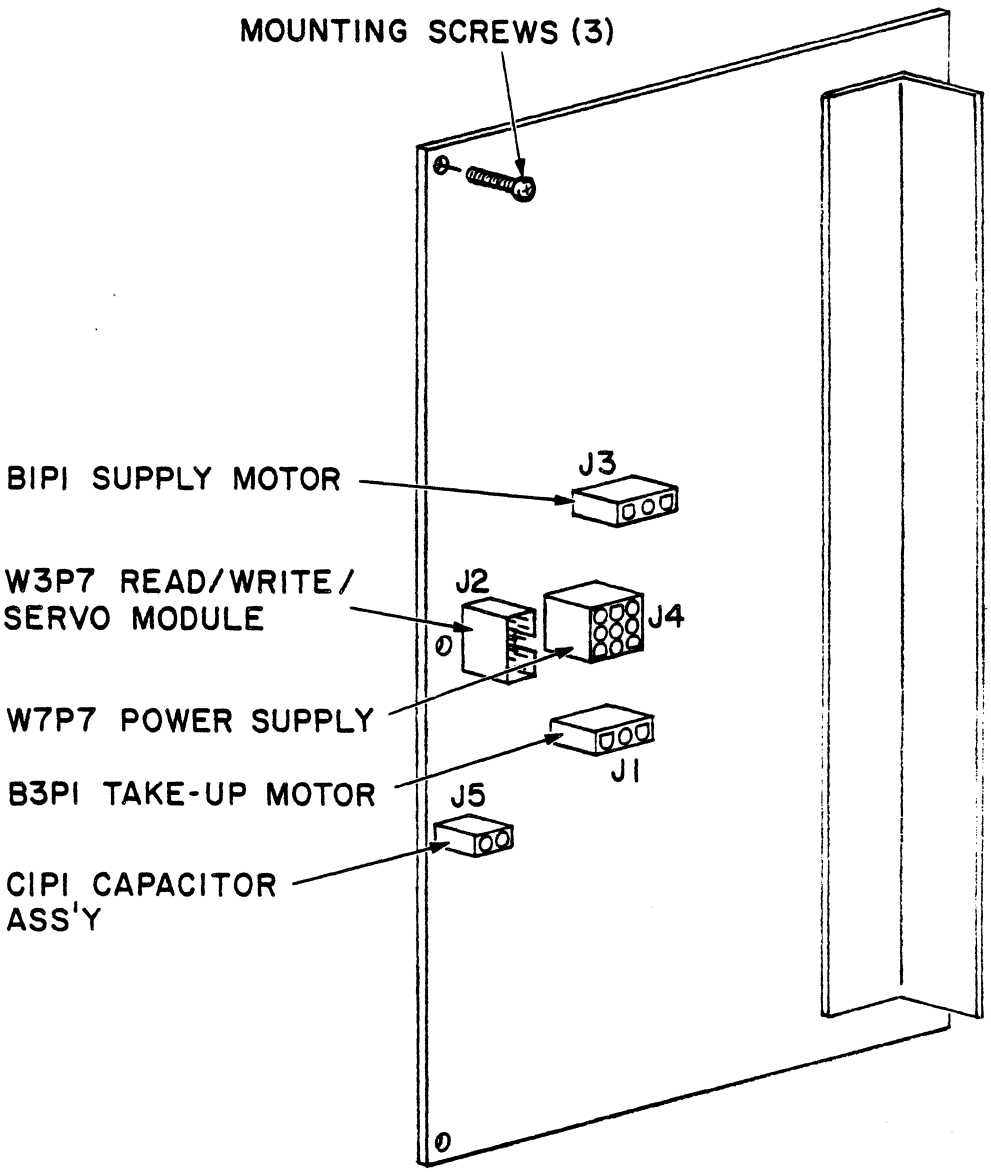


Figure 6-38. Power Driver Connectors

## PARTS DATA

A. FORMAT - A general understanding of this manual is necessary for efficient use in identifying parts and obtaining part numbers.

1. Locators are provided to aid in the location of an assembly and the figure in which it is illustrated. Isometric illustrations are provided for every major assembly and subassembly of the tape transport.

B. EXPLANATION OF TERMS AS USED IN THE PARTS LIST (See Example)

1. The number before the hyphen is the figure to which it applies. The number after the hyphen is the callout number on the figure.

2. The 8-digit number is the identifying number used in ordering replaceable parts.

3. INDENTURES - This indicates the relationship of parts to the next higher assembly.

   EXAMPLE: Guard, Spring Guide, Upper, Item -1, 1 dot, is part of the Air Bearing Assembly, Item 4-.

4. ATTACHING PARTS - The attaching parts for a particular part or assembly.

5. The part code refers to the ordering of parts and is to be read as follows:

   * = Authorized Field Replacement Part. Item is available on a routine order or an emergency order if justified.

   CNS = Cataloged Not Stocked. Item is in stock only at original manufacturing division or outside vendor.

In an emergency:

a. Order next higher assembly that contains item from WDC; that assembly must be coded with an asterisk(*).

b. Do not order any CNS items on an emergency order.

In routine cases:

a. Order the item on a routine order from WDC.

b. Expect delivery of the item in 4 to 26 weeks.

NC = Not Cataloged. Item is only available as follows:

For assembly-type items (routine or emergency):

Always order the next higher assembly that contains the item; that assembly must be coded with an asterisk (*).

All parts must be ordered from STPWDC (World Distribution Center) (612) 292-2200:
Control Data Corp., 304 North Dale Street, St. Paul, MN, 55103

EXAMPLE

| INDEX NO. | PART CODE | PART NUMBER | DESCRIPTION 1 2 3 4 5 6 |
|---|---|---|---|
| 8- | CNS | 77004215 | AIR BEARING ASSEMBLY - UPPER |
| -1 | NC | 77005020 | . GUARD, SPRING GUIDE UPPER |
| -2 | NOTE | 77004255 | . GUARD, - TAPE, SPRING AIR BEARING |
| | | | -attaching parts- |
| -3 | NC | 92748082 | . SCREW, MACH PAN HD PHL, 4-40 x .250 |
| | | | -----*----- |
| -4 | NC | 77004241 | . FOIL & HOUSING ASSEMBLY, UPPER AIR BEARING |
| -5 | NOTE | 95870205 | . 'O' RING, SILICON |
| | | | ----*----- |
| -6 | NOTE | 95967710 | . TRANSDUCER PRESS, SOLID STATE |
| | | | -attaching parts- |
| -7 | NC | 92815107 | . SCREW, CAP SOC HD, 4-40 x 1.0 |
| -8 | NC | 10125603 | . WASHER, PLAIN 4 |
| -9 | NC | 10125801 | . WASHER, SPRING LOCK 4 |
| -10 | NC | 77025281 | . ISOLATOR, SPRING GUIDE |

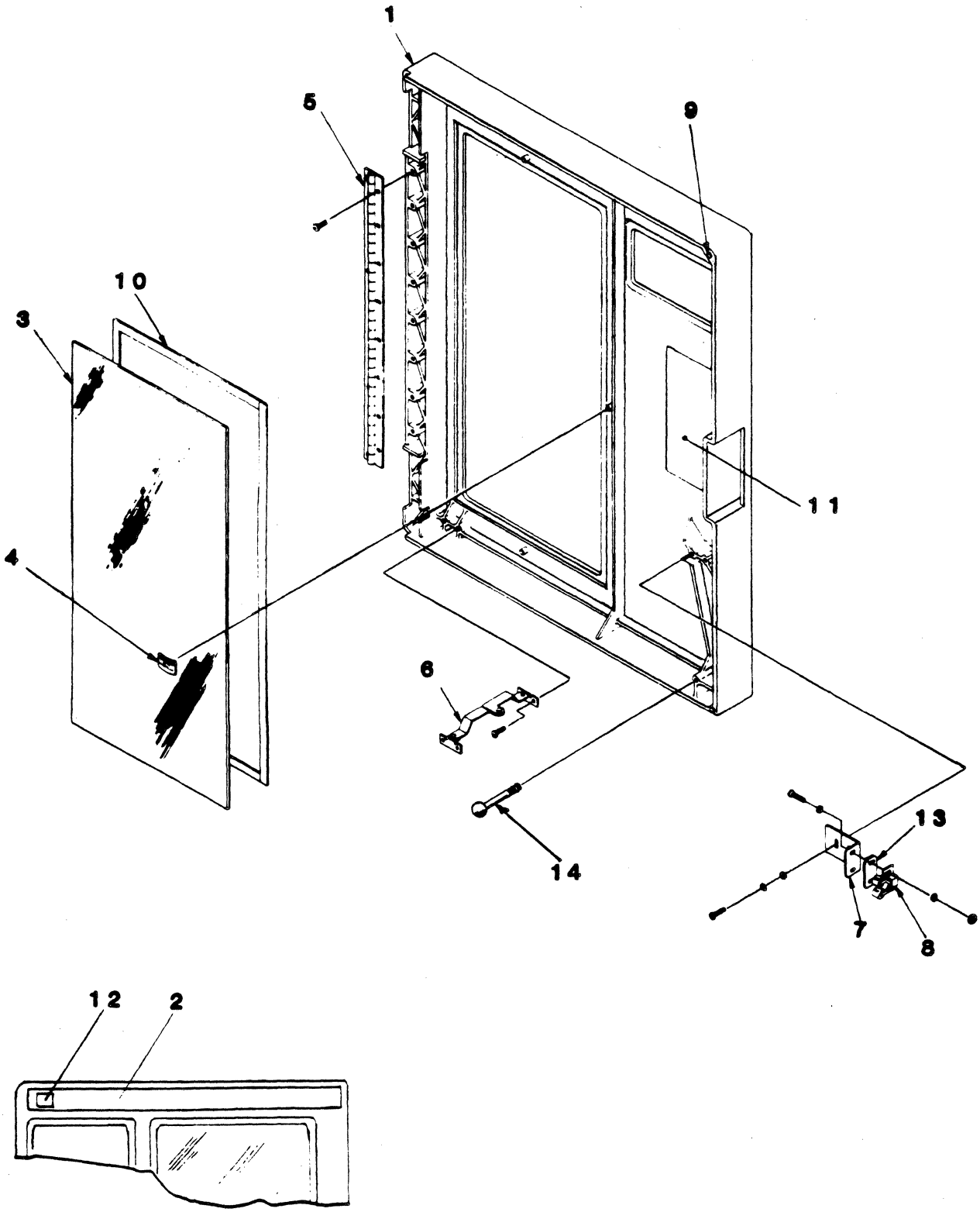


**Figure 7-1.** Door Assembly - Vertical

| INDEX NO. | PART CODE | PART NUMBER | DESCRIPTION 1 2 3 4 5 6 |
|---|---|---|---|
| 1- | CNS | 7701575X | DOOR ASSEMBLY - VERTICAL |
| -1 | CNS | 77013951 | . DOOR, VERTICAL - SEAFOAM WHITE |
| -1 | CNS | 77013952 | . DOOR, VERTICAL - LT. GRAY |
| -1 | CNS | 77013953 | . DOOR, VERTICAL - IVORY |
| -1 | CNS | 77013955 | . DOOR, VERTICAL - BLACK |
| -1 | CNS | 77013956 | . DOOR, VERTICAL - WHITE |
| -1 | CNS | 77013957 | . DOOR, VERTICAL - BEIGE |
| -1 | CNS | 77013961 | . DOOR, VERTICAL - GRAY |
| -2 | NC | 77006631 | . DECORATIVE TRIM - IMPERIAL BLUE (Tab 52 only) |
| -2 | NC | 77006632 | . DECORATIVE TRIM - BLACK (Tab 53 only) |
| -2 | NC | 77006633 | . DECORATIVE TRIM - BROWN (Tab 51 only) |
| -3 | NC | 77005081 | . WINDOW, DOOR |
| -4 | NC | 93864267 | . FASTENER, PUSH-IN |
| -5 | NC | 77005090 | . HINGE - CONTINUOUS |
| -6 | NC | 49984642 | . MECH. ASSY - HINGE STAY UPPER |
| -7 | NC | 77013910 | . BRACKET, LATCH |
| -8 | NC | 92574001 | . CATCH, ROLLER FRICTION |
| -9 | NC | 77016320 | . PAD, SELF ADHESIVE |
| -10 | NC | 95968381 | . TAPE-FOAM, DOUBLE FACE ADHESIVE .031 X .19 |
| -11 | NC | 77019823 | . LABEL, FAULT RECOVERY |
| -12 | NC | 77005514 | . PRODUCT IDENT EMBLEM (Tab 52 only) |
| -13 | NC | 77015660 | . SPACER (All except Tabs 56 & 57) |
| -14 | NC | 77010091 | . STUD, DOOR |

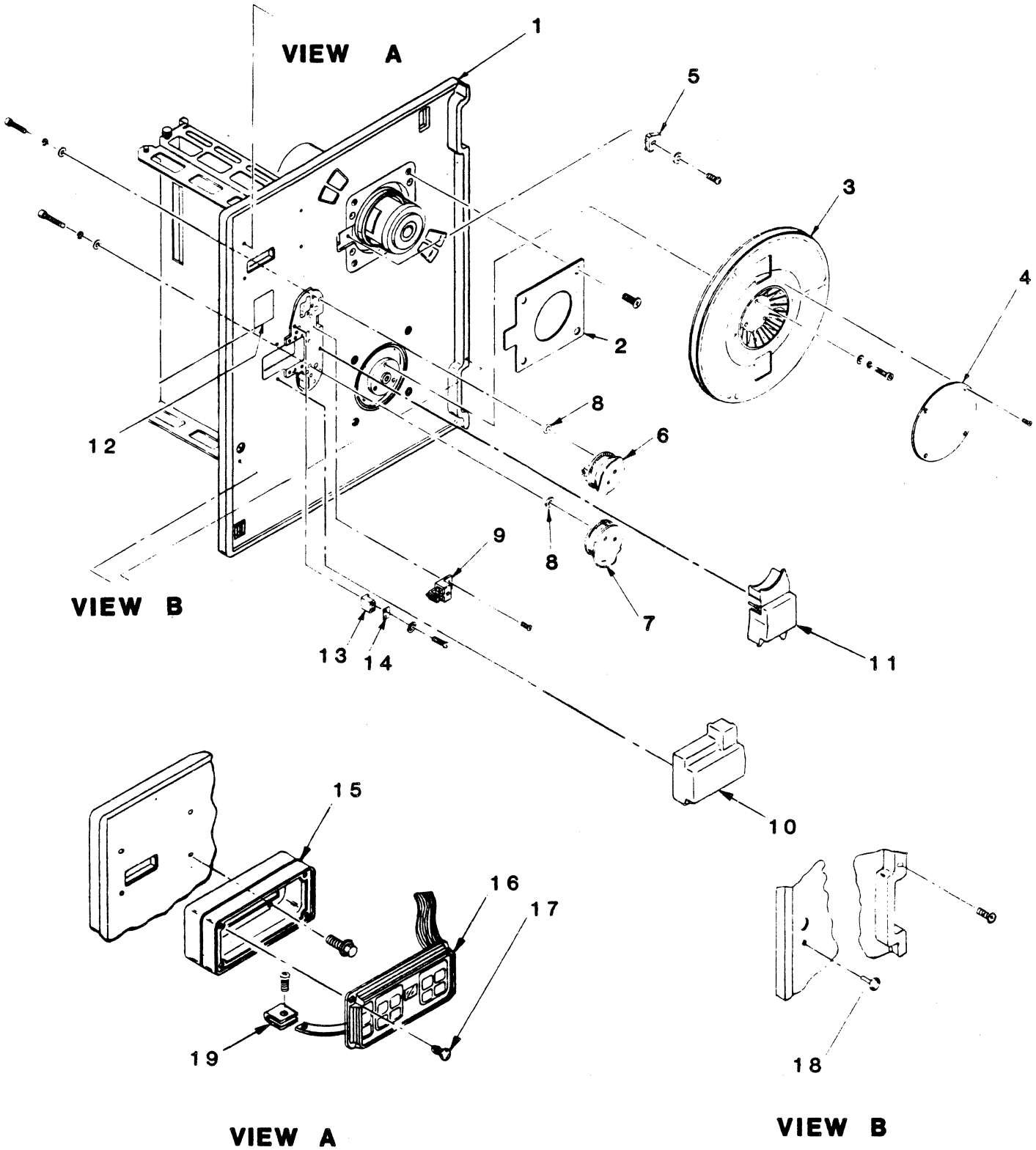


Figure 7-2. Equipment Assembly - Front

| INDEX NO. | PART CODE | PART NUMBER | DESCRIPTION 1 2 3 4 5 6 |
|---|---|---|---|
| 2- | NC | 7702024X | EQUIPMENT ASSEMBLY - FRONT (50/60 HZ) |
| -1 | NC | 77014361 | . TAPE DECK MACH. (BLACK) |
| -1 | NC | 77014362 | . TAPE DECK MACH. (WHITE) |
| -1 | NC | 77014363 | . TAPE DECK MACH. (BEIGE) |
| -2 | NC | 77014981 | . COVER - FILE PROTECT (BLACK) |
| -3 | * | 77003091 | . HUB ASSEMBLY - TAKE-UP REEL |
| -4 | NC | 77003790 | . COVER - HUB, TAKE-UP REEL |
| -5 | * | 95966083 | . SENSOR ASSEMBLY |
| -6 | CNS | 77004216 | . AIR BEARING ASSEMBLY - UPPER (See Figure 8) ** |
| -7 | CNS | 77004336 | . AIR BEARING ASSEMBLY - LOWER (See Figure 9) ** |
| -8 | * | 95870206 | . "O" RING, SILICON |
| -9 | * | 77004612 | . EOT/BOT ASSEMBLY |
| -10 | CNS | 77011571 | . COVER ASSY - MAGNETIC HEAD |
| -11 | CNS | 77011561 | . COVER ASSY - TAPE PATH |
| -12 | NC | 77006990 | . LABEL - TAPE PATH |
| -13 | * | 77031270 | . SCRAPER ASSEMBLY |
| -14 | NC | 77004720 | . PLATE; TAPE CLEANER |
| -15 | * | 77014220 | . HOUSING - OPERATOR PANEL |
| -16 | * | 77022014 | . OPERATOR PANEL GCR |
| -16 | * | 77022016 | . OPERATOR PANEL ASSEMBLY (BY3K6R/T) |
| -17 | NC | 95968770 | . CLIP, PUSH-IN |
| -18 | CNS | 77014130 | . DOOR CATCH STRIKE, BALL END |
| -19 | NC | 77009840 | . TERMINAL, FOIL GROUNDING |

** AIR BEARING ASSEMBLIES ARE NOT REPLACEABLE.

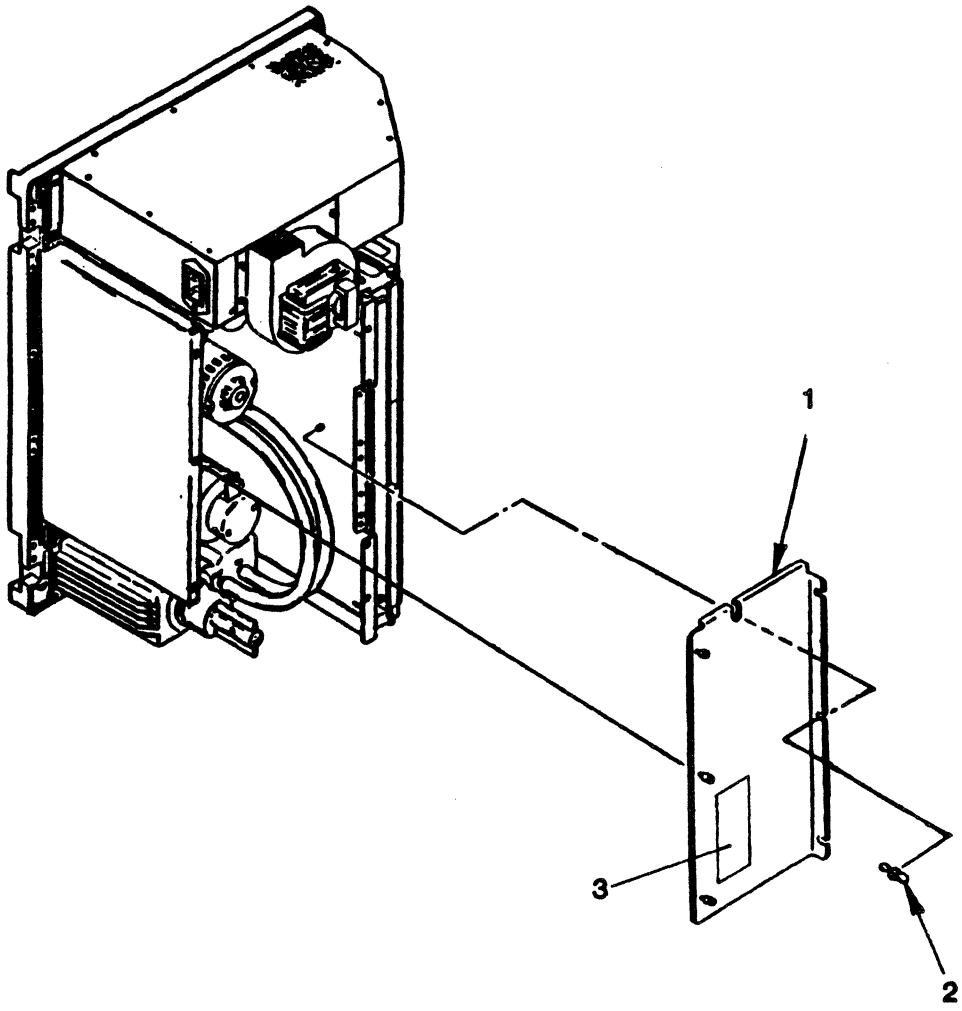


Figure 7-3. Equipment Assembly - Rear

| INDEX NO. | PART CODE | PART NUMBER | DESCRIPTION 1 2 3 4 5 6 |
|---|---|---|---|
| 3- | NC | 7702024X | EQUIPMENT ASSY - REAR (60/50 HZ) |
| -1 | NC | 77023611 | . DRIVE COVER ASSY |
| -2 | NC | 93031001 | . NUT - WING (NC) 6-32 |
| -3 | NC | 21987646 | . LABEL - FCC, RFI, CLASS A, METRIC |
| - | NC | 77015830 | . POWER CORD (60 HZ UNIT ONLY) |
| - | NC | 95967880 | . POWER CONNECTOR (50 HZ UNIT ONLY) |

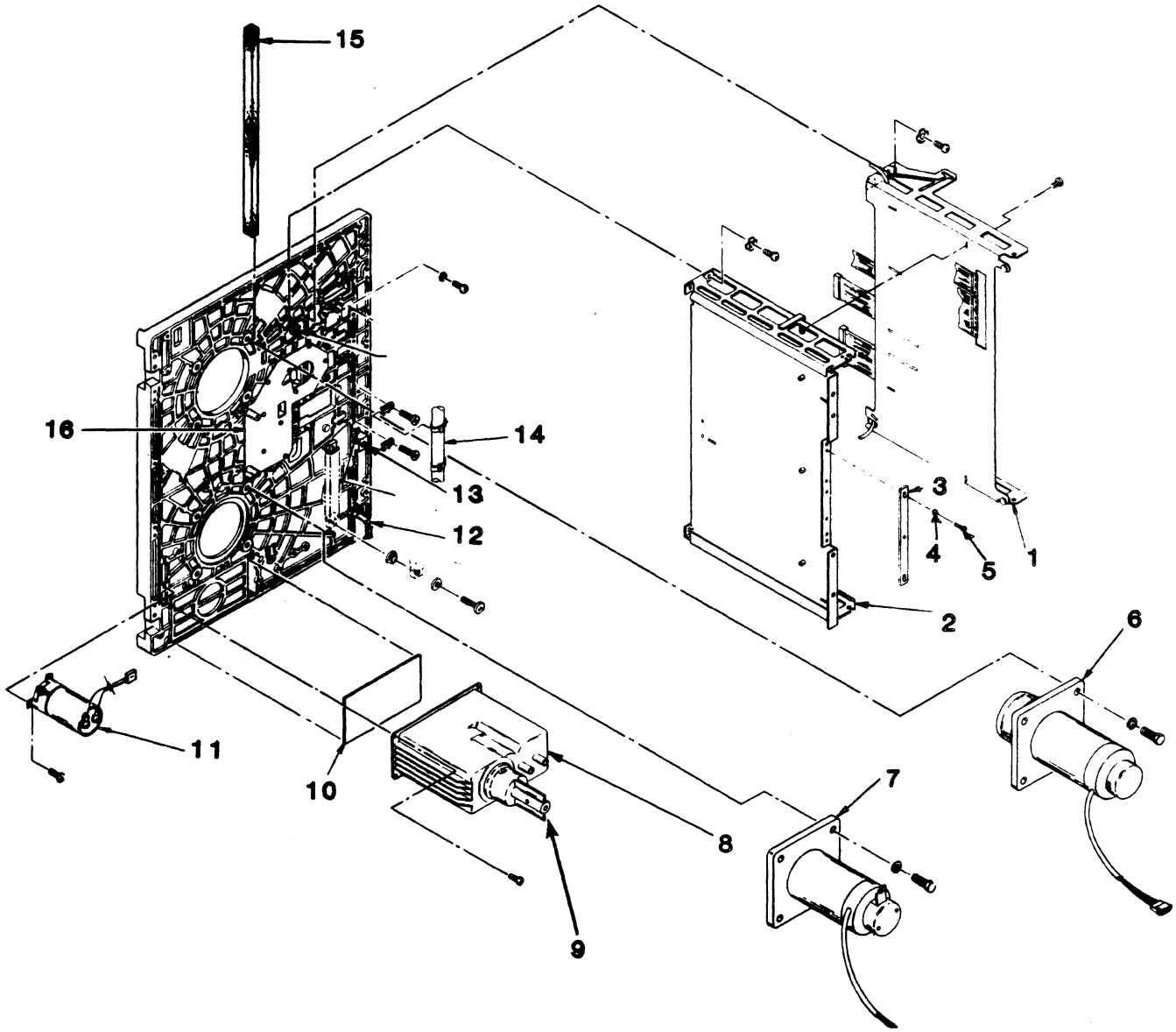


Figure 7-4. Equipment Assembly - Rear

| INDEX NO. | PART CODE | PART NUMBER | DESCRIPTION 1 2 3 4 5 6 |
|---|---|---|---|
| 4- | NC | 7702024X | EQUIPMENT ASSY - REAR (50/60 HZ) |
| -1 | NC | 77024112 | . CAGE ASSEMBLY, DUAL GCR STD OEM |
| -2 | NC | 77018861 | . CAGE ASSEMBLY, TRIPLE GCR |
| -3 | NC | 77017195 | . STRIP - CLAMP, CA DUAL, 6.72 LG |
| -4 | NC | 10125605 | . WASHER PLAIN 6 |
| -5 | NC | 95959731 | . SCREW - PAN HEAD/EXT TOOTH, LW 6-32 X .750 |
| -6 | * | 77006579 | . MOTOR ASSEMBLY - SUPPLY REEL |
| -7 | * | 77006162 | . MOTOR ASSEMBLY - TAKE UP REEL |
| -8 | NC | 77025191 | . AIR CHAMBER ASSEMBLY |
| -9 | CNS | 77011551 | . . PRESSURE REGULATOR ASSEMBLY |
| - | NC | 77015420 | . . STUD - HOLLOW |
| -10 | CNS | 77024250 | . GASKET - AIR CHAMBER |
| -11 | NC | 77015912 | . CAP - CA, 13-17K MF/2 SKT/09LG |
| -12 | * | 95966651 | . INTERLOCK SWITCH |
| -13 | NC | 94802306 | . FASTENER - ADJ. PAWL |
| -14 | NC | 77023333 | . CA - PWR, TTGS 25-75 DC GCR OEM |
| -15 | NC | 77016921 | . FOAM STRIP, ADH. .75T, .5W, 14.5L |
| -16 | NC | 77025261 | . PLENUM COVER ASSEMBLY |
| - | NC | 77027453 | . CA - PWR TO XDUCER 9.25LG |
| - | NC | 77015431 | . GASKET - FILTER |
| - | * | 95966090 | . . FILTER |

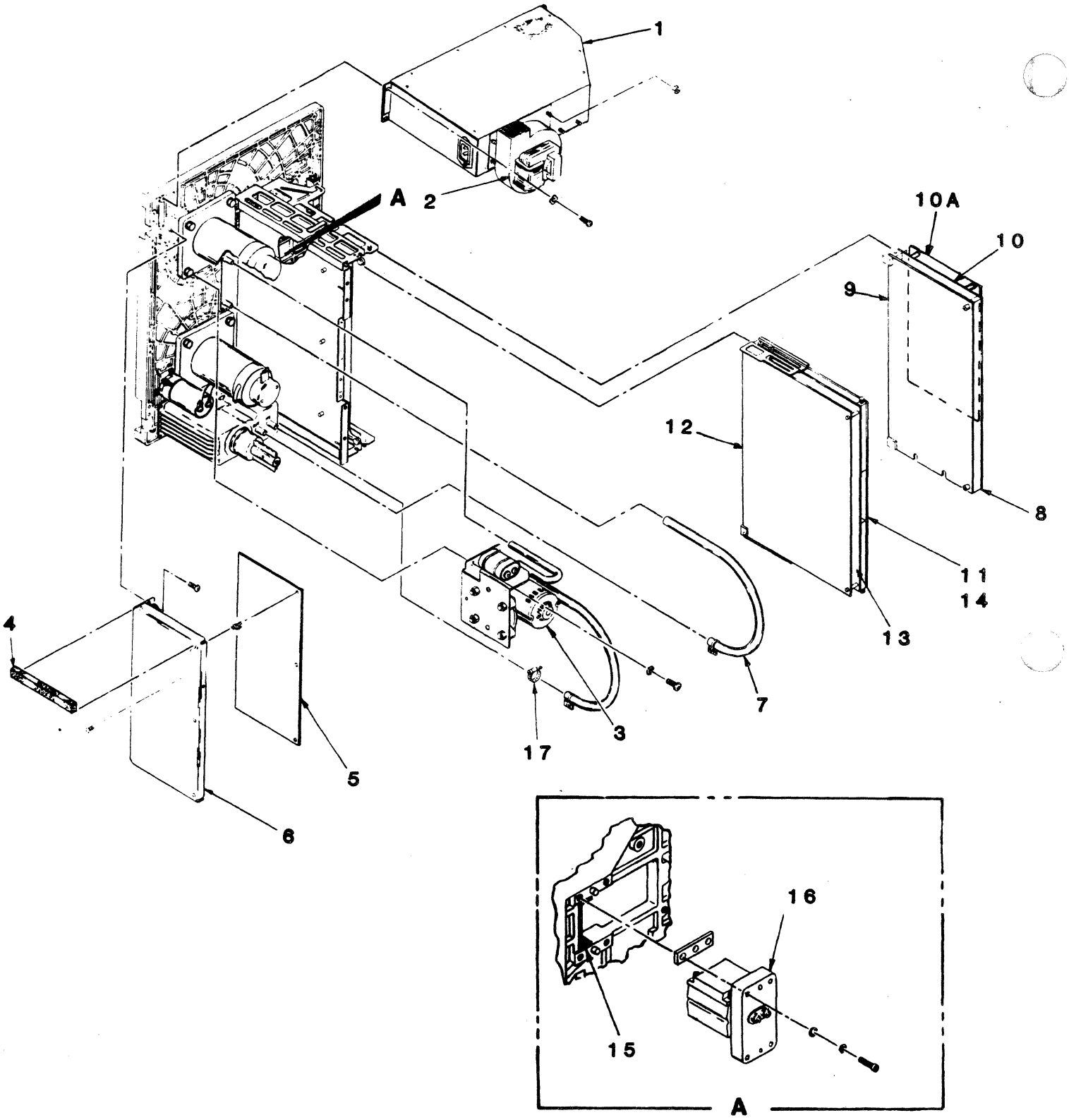


Figure 7-5. Equipment Assembly - Rear

| INDEX NO. | PART CODE | PART NUMBER | DESCRIPTION 1 2 3 4 5 6 |
|---|---|---|---|
| 5- | NC | 7702024X | EQUIPMENT ASSY - REAR (50/60 HZ) |
| -1 | * | 77018963 | . POWER SUPPLY ASSEMBLY 60 HZ SERIES CODE 01-16 |
| -1 | * | 77018964 | . POWER SUPPLY ASSEMBLY 50 HZ SERIES CODE 01-16 |
| -1 | * | 77029341 | . POWER SUPPLY ASSEMBLY 60 HZ SERIES CODE 17 & UP |
| -1 | * | 77029342 | . POWER SUPPLY ASSEMBLY 50 HZ SERIES CODE 17 & UP |
| -2 | * | 95968431 | . BLOWER (BY3L6C,D ONLY) |
| -2 | * | 95968433 | . BLOWER 30/CFM, 220/120V, 50/60 HZ |
| -3 | NC | 77011537 | . COMPRESSOR ASSEMBLY, BRACKET & CAP, 50/60 HZ |
| -4 | NC | 77016920 | . FOAM STRIP, ADHESIVE 0.75T, .50W, 7.5L |
| -5 | * | 77041194 | . PWA - POWER DRIVER 10 AMP |
| -6 | NC | 77023560 | . BRACKET - PWR AMP (PWA Mtg) |
| -7 | NC | 77011934 | . TUBING - PVC .500, .31ID, 22.0L |
| -8 | NC | 77027112 | . CARD SET ASSEMBLY 25/75 IPS |
| -8 | NC | 77027114 | . CARD SET ASSEMBLY BFRD STC ENHANCED |
| -9 | * | 77025933 | . . PWA-SRVO/CNTRL w/PROMS |
| -9 | * | 77025952 | . . PWA-SRVO/CNTRL ASSY (BY3G6J,K & BY3K6J,K ONLY) |
| -9 | * | 77025924 | . . PWA-SRVO/CNTRL ASSY (BY3K6C,D,E,F,G,H,M,N,R,T ONLY) |
| -10 | * | 77041225 | . . PWA-READ AMPLIFIER |
| -10A | * | 77041217 | . . PWA-WRITE DRIVER |
| -11 | NC | 77018152 | . CARD SET - TRIPLE GCR w/STD INTERFACE |
| -11 | NC | 77028971 | . CARD SET - BFRD STC ENHANCED |
| -12 | * | 77041415 | . . PWA-PERTEC I/O |
| -12 | * | 77041416 | . . PWA-PERTEC I/O (BY3G6E,F,G,H ONLY) |
| -12 | * | 77028042 | . . PWA-PERTEC I/O (BY3G6J,K ONLY |
| -12 | * | 77042473 | . . PWA-BFRD PERTEC I/O (BY3H6C,D,G,H,J,K ONLY) |
| -12 | * | 77042642 | . . PWA-BFRD PERTEC I/O (BY3H6A,B ONLY) |
| -12 | * | 77042359 | . . PWA-BFRD STC I/O (BY3J6A,B,C,D,E ONLY) |
| -12 | * | 77031222 | . . PWA-BFRD PERTEC ENHANCED I/O (BY3L6A,B ONLY) |
| -12 | * | 77031212 | . . PWA-BFRD PERTEC ENHANCED I/O (BY3L6C/D) |
| -12 | * | 77028922 | . . PWA-BFRD STC ENH I/O (BY3K6A,B,L,P ONLY) |
| -12 | * | 77028931 | . . PWA-BFRD STC ENH I/O (BY3K6C THRU H,M,N,R,T ONLY) |
| -12 | * | 77042783 | . . PWA-BFRD STC ENH I/O (BY3K6J,K ONLY) |
| -12 | * | 77042711 | . . PWA-SCSI DIFF (BY3P6E,F) |
| -12 | * | 77042712 | . . PWA-SCSI DIFF (BY3P6J,K) |
| -12 | * | 77042811 | . . PWA-SCSI S.E. (BY3N6E,F) |
| -12 | * | 77042812 | . . PWA-SCSI S.E. (BY3N6J,K) |
| -13 | * | 77033551 | . . PWA-FMTR WRITE (BY3G6E THRU H; BY3H6C THRU K; BY3N6J,K; BY3P6J,K) |
| -13 | * | 77033561 | . . PWA-FMTR WRITE (BY3G6J,K; BY3K6C THRU H; BY3K6M,N) |
| -13 | * | 77033571 | . . PWA-FMTR WRITE (BY3K6J,K) |
| -13 | * | 77033562 | . . PWA-FMTR WRITE (ALL OTHERS) |
| -14 | * | 77033621 | . . PWA-FORMATTER READ w/PROMS |
| -15 | NC | 77007090 | . LINER SILICONE FOAM RUBBER |
| -16 | NC | 77021291 | . WR CURR LABEL + R/W HD ASSY (SERIES CODE 01 TO 07) |
| -16 | * | 77025380 | . MAG HD ASSY 9-TRK R/W/E GCR (SERIES CODE 08 TO 25) |
| -16 | * | 77034710 | . MAG HD STT DUAL GAP 9 TRK (SERIES CODE 26 & ABOVE) |

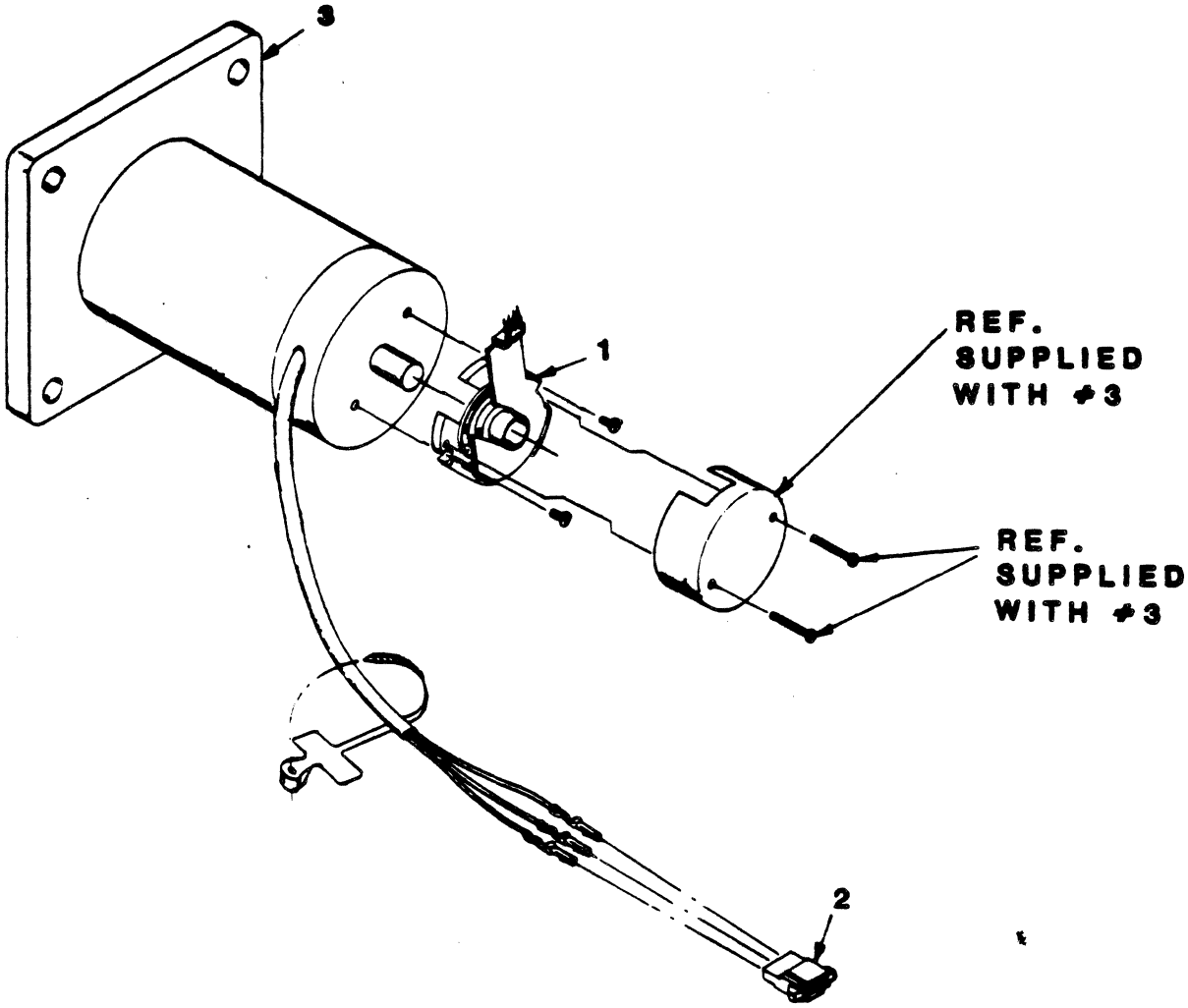


Figure 7-6. Motor Assembly, Take-up Reel

| INDEX NO. | PART CODE | PART NUMBER | DESCRIPTION 1 2 3 4 5 6 |
|---|---|---|---|
| 6- | * | 77006162 | MOTOR ASSEMBLY, TAKE-UP REEL |
| -1 | NC | 95966061 | . TACHOMETER, 1000 LINE * |
| -2 | NC | 95929001 | . CONNECTOR, HOUSING, PIN/SOCKET |
| -3 | NC | 77015532 | . MOTOR ASSEMBLY, REEL |

* TACH 1000 LINE IS NOT FIELD REPLACEABLE.

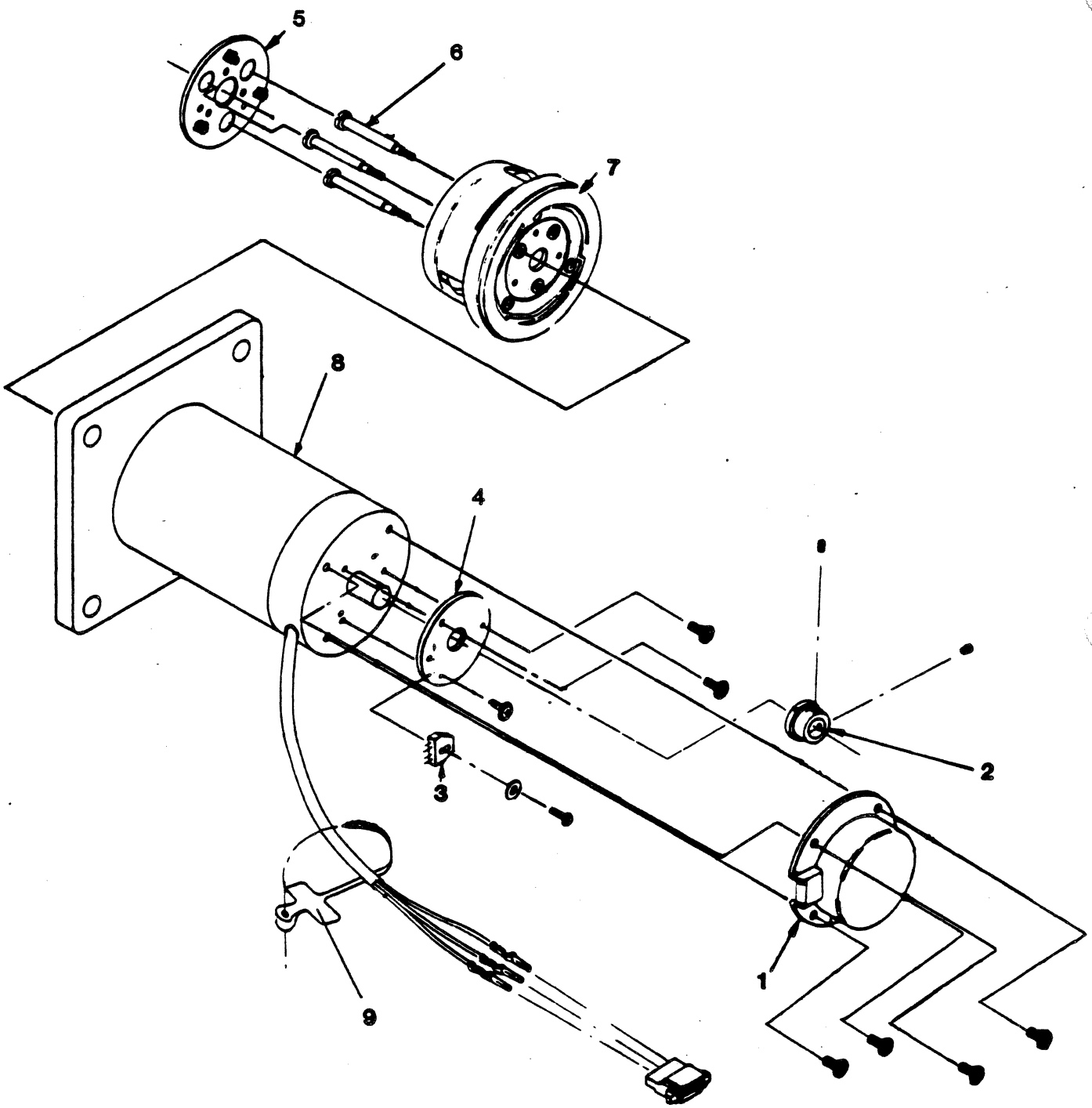


Figure 7-7. Motor Assembly, Supply Reel

| INDEX NO. | PART CODE | PART NUMBER | DESCRIPTION 1 2 3 4 5 6 |
|---|---|---|---|
| 7- | * | 77006579 | MOTOR ASSEMBLY, SUPPLY REEL |
| -1 | NC | 77002240 | . COVER, TACHOMETER |
| -2 | * | 77007560 | . HUB ASSEMBLY - TACHOMETER |
| -3 | * | 95966082 | . SENSOR ASSEMBLY |
| -4 | NC | 77002230 | . PLATE, MOUNTING, SENSOR |
| -5 | NC | 77029241 | . COVER - SUPPLY REEL HUB |
| -6 | NC | 77003970 | . SCREW, SHOULDER |
| -7 | * | 77003916 | . HUB ASSEMBLY - SUPPLY REEL |
| -8 | * | 77015532 | . MOTOR ASSEMBLY - REEL |
| -9 | NC | 94277407 | . STRAP, MARKET TIE 18 LB, .091W 3.63L |

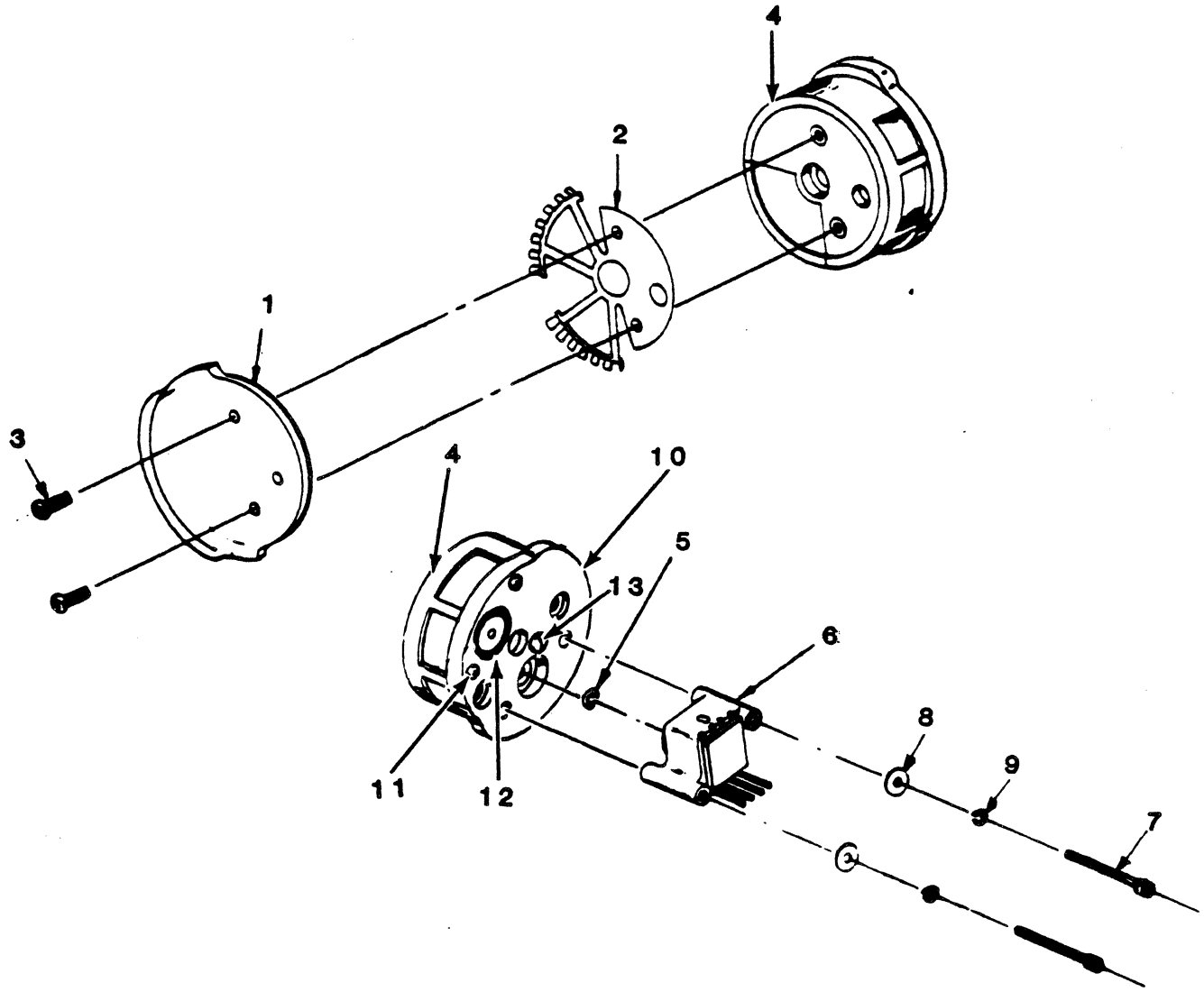


Figure 7-8. Air Bearing Assembly - Upper

| INDEX NO. | PART CODE | PART NUMBER | DESCRIPTION 1 2 3 4 5 6 |
|---|---|---|---|
| 8- | CNS | 77004216 | AIR BEARING ASSEMBLY - UPPER ** |
| -1 | NC | 77005020 | . GUARD, SPRING GUIDE UPPER |
| -2 | NOTE * | 77032713 | . GUIDE - TAPE, SPRING |
| -3 | NC | 92748082 | . SCREW, MACH PAN HD PHL, 4-40 x .250 |
| -4 | NC | 77034391 | . HOUSING ASSEMBLY, UPPER AIR BEARING |
| -5 | NOTE * | 95870205 | . 'O' RING, SILICON |
| -6 | NOTE * | 95967710 | . TRANSDUCER PRESS, SOLID STATE |
| -7 | NC | 92815107 | . SCREW, CAP SOC HD, 4-40 x 1.0 |
| -8 | NC | 10125603 | . WASHER, PLAIN 4 |
| -9 | NC | 10125801 | . WASHER, SPRING LOCK 4 |
| -10 | NC | 77031480 | . TAPE GUIDE |
| -11 | NC | 10127103 | . SCREW, PAN HEAD, MACH, 4-40 x .312 |
| -12 | NC | 95870206 | . O-RING, SILICON |
| -13 | NC | 10125702 | . SCREW, FL HEAD, MACH, 4-40 x 1/4 |

* NOTE: KIT, AIR BEARING P/N 77015691 HAS PARTS 2, 5, and 6.
** NOT FIELD REPLACEABLE.

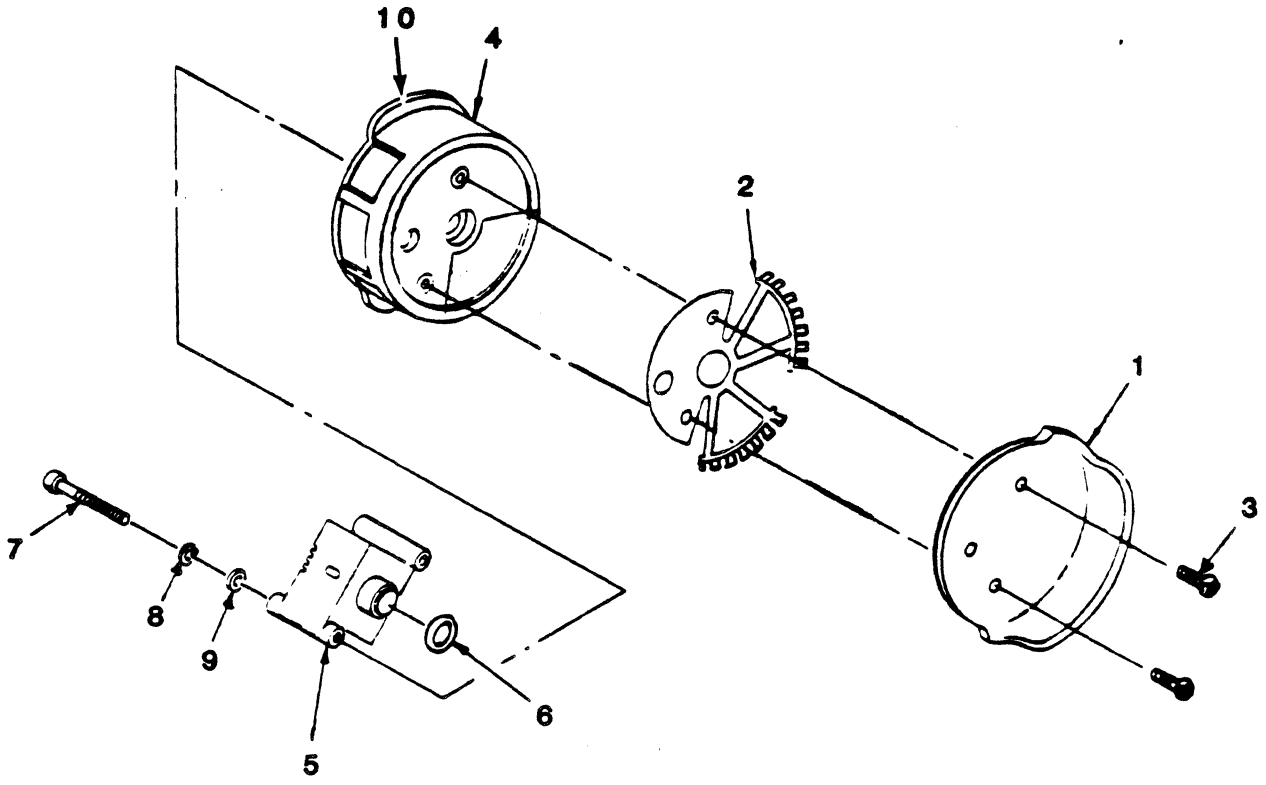


Figure 7-9. Air Bearing Assembly - Lower

* NOTE - Kit, Air Bearing P/N 77015691 has parts 2, 5, 6 & 7

| INDEX NO. | PART CODE | PART NUMBER | DESCRIPTION 1 2 3 4 5 6 |
|---|---|---|---|
| 9- | CNS | 77004336 | AIR BEARING ASSEMBLY - LOWER ** |
| -1 | NC | 77005030 | . GUARD SPRING GUIDE LOWER |
| -2 | NOTE * | 77032712 | . GUIDE - TAPE, SPRING |
| -3 | NC | 92748082 | . SCREW, MACHINE PAN HD PHL, 4-40 x .250 |
| -4 | NC | 77034411 | . HOUSING ASSEMBLY, LOWER AIR BEARING |
| -5 | NOTE * | 95967710 | . TRANSDUCER PRESS SOLID STATE |
| -6 | NOTE * | 95870205 | . 'O' RING, SILICON |
| -7 | NC | 92815107 | . SCREW, CAP, SOC HD, 4-40 x 1.0 |
| -8 | NC | 10125801 | . WASHER, SPRING LOCK 4 |
| -9 | NC | 10125603 | . WASHER, PLAIN 4 |
| - | NC | 95870206 | . 'O' RING, SILICON |
| -10 | NC | 77031490 | . SPRING GUIDE |

* NOTE: KIT, AIR BEARING P/N 77015691 HAS PARTS 2, 5, and 6.

** NOTE: NOT FIELD REPLACEABLE.

Table 7-1. PWA Complement

| PART NO. | PART CODE | PWA TYPE |
|---|---|---|
| 77041194 | * | PWA - POWER DRIVER 10 AMP |
| 77025933 | * | PWA - SERVO/CONTROL w/PROMS |
| 77025952 | * | PWA - SERVO/CONTROL w/PROMS (BY3G6J,K & BY3K6J,K) |
| 77025924 | * | PWA - SERVO/CONTROL w/PROMS (BY3K6C,D,E,F,G,H,M,N,R,T) |
| 77041225 | * | PWA - READ AMPLIFIER |
| 77041217 | * | PWA - WRITE DRIVER |
| 77041415 | & | PWA - PERTEC INTERFACE (BY3G6A,B,C,D ONLY) |
| 77041416 | * | PWA - PERTEC INTERFACE (BY3G6E,F,G,H ONLY) |
| 77028042 | * | PWA - PERTEC INTERFACE (BY3G6J,K ONLY) |
| 77042473 | * | PWA - BUFFERED PERTEC I/O (BY3H6C,D,G,H,J,K ONLY) |
| 77042642 | * | PWA - BUFFERED PERTEC I/O (BY3H6A,B ONLY) |
| 77042359 | * | PWA - BUFFERED STC I/O (BY3J6A,B,C,D,E ONLY) |
| 77031222 | * | PWA - BUFFERED PERTEC ENHANCED I/O (BY3L6A,B ONLY) |
| 77031212 | * | PWA - BUFFERED PERTEC ENHANCED I/O (BY3L6C,D ONLY) |
| 77028922 | * | PWA - BUFFERED STC ENHANCED I/O (BY3K6A,B,L,P ONLY) |
| 77028931 | * | PWA - BUFFERED STC ENHANCED I/O (BY3K6C THRU H,M,N,R,T ONLY) |
| 77042783 | * | PWA - BUFFERED STC ENHANCED I/O (BY3K6J,K ONLY) |
| 77042711 | * | PWA - SCSI DIFF (BY3P6E, F) |
| 77042712 | * | PWA - SCSI DIFF (BY3P6J, K) |
| 77042811 | * | PWA - SCSI S.E. (BY3N6E, F) |
| 77042812 | * | PWA - SCSI S.E. (BY3N6J, K) |
| 77033551 | * | PWA - FMTR WR (BY3G6E TO H; BY3H6C TO K; BY3N6J,K; BY3P6J,K) |
| 77033561 | * | PWA - FMTR WR (BY3G6J,K; BY3K6C TO H; BY3K6M,N) |
| 77033571 | * | PWA - FMTR WR (BY3K6J,K) |
| 77033562 | * | PWA - FMTR WR (ALL OTHERS) |
| 77033621 | * | PWA - FORMATTER READ w/PROMS |

NOTE

See Section 5, Table 5-1, for illustrations of printed wiring assemblies.

Table 7-2. Cable Assemblies

| PART NO. | PART CODE | DESCRIPTION |
|---|---|---|
| 77015562 | * | CABLE ASSEMBLY - W5, WRITE HEAD |
| 77021041 | * | CABLE ASSEMBLY - W6, READ HEAD |
| 77013531 | CNS | CABLE ASSEMBLY - W2 |
| 77023333 | CNS | CABLE ASSEMBLY - W7 |
| 77015830 | CNS | CABLE ASSEMBLY - AC POWER, CB1/PS PWA |
| 77027451 | CNS | CABLE ASSEMBLY - W9 |
| 77027452 | CNS | CABLE ASSEMBLY - W1 |
| 77013593 | CNS | CABLE ASSEMBLY - W12 |
| 77013542 | CNS | CABLE ASSEMBLY - W10 (USED ON PIVOT TYPE R/W CAGE) |
| 77024151 | CNS | CABLE ASSEMBLY - W10 (USED ON SLIDE TYPE R/W CAGE) |
| 77013522 | CNS | CABLE ASSEMBLY - W3 |
| 77015892 | CNS | CABLE ASSEMBLY - C1P1 |
| 77018543 | CNS | CABLE ASSEMBLY - W8, OPER PNL |
| 76992342 | CNS | GROUND CABLE |

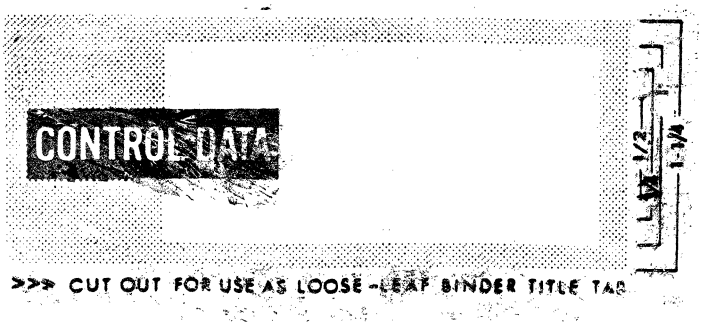


>>> CUT OUT FOR USE AS LOOSE-LEAF BINDER TITLE TAB

CONTROL DATA
CORPORATION

2621 VAN BUREN AVENUE, NORRISTOWN, PENNSYLVANIA 19401

LITHO IN U.S.A.