ELITE 1520APL
TECHNICAL MANUAL

TABLE OF CONTENTS

PAGE

INTRODUCTION-- 1

SPECIFICATIONS-- 2-3

OPERATION

UNPACKING----------------------------------- 4
INSTALLATION-------------------------------- 4
FIRST TIME OPERATION------------------------ 5
MAINTAINABILITY----------------------------- 25
MODULE REPLACEMENT-------------------------- 25
P.C. CARD REPAIR---------------------------- 25

OPERATING INFORMATION

FRONT PANEL CONTROLS------------------------ 6
GENERAL OPERATING INFORMATION--------------- 7
STANDARD FEATURES AVAILABLE----------------- 8
OPTIONAL FEATURES--------------------------- 9
CONTROLS PROVIDED WITH OPTIONAL LOWER CASE KEYBOARD----------------------------------- 10
TECHNICAL DESCRIPTION----------------------- 18-22
WARRANTY------------------------------------ 40

ILLUSTRATIONS

ELITE 1520A APL FONT CHART------------------ 11
ELITE 1520A UPPER/LOWER CASE FONT CHART----- 12
ELITE 1520A TYPEWRITER PAIRED APL FONT CHART---- 13
ELITE 1520A TYPE PAIRED APL KEYBOARD LAYOUT----- 14
ELITE 1520A BIT PAIRED APL KEYBOARD LAYOUT------ 15

TABLES

CODE GENERATION CHART----------------------- 16
CONTROL CODE FONT--------------------------- 17
DATA RATE PROGRAMMING----------------------- 23-23A
INTERFACE INFORMATION----------------------- 24
CURRENT LOOP INTERFACE---------------------- 24A
X-Y ADDRESSING TABLE------------------------ 37-39

DRAWINGS

TIMING LOGIC DIAGRAM 380DAE0600------------- 26
TIMING LOGIC DIAGRAM 380DAE1000------------- 27
MEMORY DISPLAY LOGIC DIAGRAM---------------- 28
MEMORY DISPLAY APL LOGIC DIAGRAM------------ 29
TRANSCEIVER LOGIC DIAGRAM------------------- 30
WIRING DIAGRAM POWER SUPPLY CHASSIS--------- 31
BOARD ASSEMBLY 110/125 & 220/250 VAC-------- 32
SCHEMATIC DIAGRAM 110/125 & 220/250 VAC----- 33
APL KEYBOARD LOGIC DIAGRAM------------------ 34
TYPEWRITER PAIRED APL LOGIC DIAGRAM--------- 35
BIT PAIRED APL LOGIC DIAGRAM---------------- 36

INTRODUCTION

The DATAMEDIA Elite 1520A APL/ASCII Video Terminal is a stand-alone separable terminal containing an alphanumeric display, keyboard, storage, control logic and an asynchronous communications interface.

The Elite 1520A is plug compatible with Teletypewriter* Models 33 and 35 and is a convenient substitute where the requirement for hard-copy is a secondary consideration.

There are certain additional advantages:

- APL character font
- quiet operation
- editing plus roll mode
- 50 to 9600 Baud
- 80 characters per line
- no end of line hangups
- Upper/Lower Case (ASCII)
- addressable cursor
- tape mode
- greater reliability
- electronic keyboard
- attractive modern styling
- modular construction to facilitate maintenance
- computer or operator-controlled printer output
- fixed tab

The Elite 1520A APL/ASCII is an ideal terminal for data entry and information retrieval. The applications are only limited by the imagination of the user.

The physical characteristics and styling are on level with office or data processing decor.

Both domestic and European models of the Elite 1520A APL/ASCII are available.

The low cost, low maintenance and high quality of the Elite 1520A APL/ASCII is a reason it will become an integral part of systems tailored to meet the growing demands in the data communications industry.

---

* Teletypewriter is a registered tradename of Teletype Corporation, Skokie, Illinois

ELITE 1520A APL/ASCII SPECIFICATIONS

SCREEN CAPACITY	1920 characters
SCREEN TYPE/SIZE	P4 white, 12 inch
SCREEN FILTER	Gray or Green
CHARACTERS PER LINE	80
LINES OF DISPLAY	24
CHARACTER GENERATION	5 x 7 dot matrix within a 5 x 9 dot field to provide true lower case descenders
CHARACTER SIZE	0.18"H x 0.09"W
CHARACTER SET	Full ASCII - upper/lower case 128 codes stored
REFRESH RATES	50 or 60 Hz
DATA RATES	50 to 9600bps, asynchronous
MEMORY TYPE	MOS
KEYBOARD	Electronic, typewriter layout with numeric cluster and cursor controls
CURSOR	Addressable X-Y coordinates; non-destructive, blinking cursor up, down, right, left, home and fixed tab
KEY CONTROLS	Erase screen, erase to end of page
OPERATING MODES	Full or Half Duplex, Roll or Tape Mode
ALARM	Audible on alarm code or eight characters from end of line
INTERFACE-LINE	RS232C; lamp indicators for carrier detect, and clear to send
INTERFACE-PRINTER	Printer output computer or keyboard-controlled
VIDEO OUTPUT	Provision to drive up to 16 external monitors

DIMENSIONS	Display/Controller	Keyboard
Depth	35.24cm (13.875 in.)	21.21cm (8.35 in.)
Height	37.78cm (14.875 in.)	8.38cm (3.30 in.)
Width	35.56cm (14.00 in.)	45.72cm (18.00in.)
Weight	14.06kg (31 lbs.)	3.25kg (7.16 lbs)

OPERATING ENVIRONMENT	+10°C to +40°C (+50°F to +100°F) Humidity +10% to +80% (non-Condensing)		
POWER	100/125V	50/60Hz	75 Watts
	200/250V	50/60Hz	75 Watts

TERMINAL ENVIRONMENTAL CONSIDERATIONS

The Datamedia Elite 1520A APL/ASCII Video Terminal will operate within the parameters and characteristics listed below:

Terminal Physical and Environmental Characteristics

DIMENSIONS	Display/Controller		Keyboard
Depth	35.24cm (13.875 in.)		21.21cm (8.35 in.)
Height	37.78cm (14.875 in.)		8.38cm (3.30 in.)
Width	35.56cm (14.00 in.)		45.72cm (18.00in.)
Weight	14.06kg (31 lbs.)		3.25kg (7.16 lbs)
OPERATING ENVIRONMENT	+10° to +40°C (+50°F to +100°F) Humidity +10% to +80% (non-condensing)		
POWER REQUIREMENTS	100/125V 200/250V	50/60Hz 50/60Hz	75 Watts 75 Watts
POWER CORD	6 Feet (standard length)		
DATA SET CABLE (optional)	6 Feet (standard length)		
KEYBOARD CABLE	6 Feet (standard length)		

OPERATION

UNPACKING

The Elite 1520A APL/ASCII has been carefully packed to ensure its safety during shipment. To remove the Elite 1520A APL/ASCII from the shipping carton, the terminal should be lifted by grasping the underside of the base with both hands. It is recommended that the terminal be lifted in this manner at all times and never lifted by grasping the hood. In the event that shipping damage has occurred, file a claim against the carrier and notify Datamedia Corporation immediately.

INSTALLATION

1. Check that the hood has not been shifted or the base damaged in any way.
2. Insert the power cord into a normal power outlet 100/125 VAC grounded wall plug, or if specified, 200/250 VAC.
3. Set the DATA RATE switch to any one of the two speeds which you have pre-selected.
4. Insert the modem cable into the RS-232 output of the terminal and other end into an RS-232 compatible acoustical coupler or modem. (Connector plug in the rear of the terminal marked LINE).
5. Turn on the POWER switch, (power switch is located on the right side of the terminal), wait 30 seconds for the raster to appear, adjust contrast and brightness located on the right side of the terminal to your own liking.
6. With the FULL DUP (Full Duplex) switch in the UP (Half Duplex) position, type several characters and check for the correct display.

FIRST-TIME OPERATION

Turn on primary power using the ON/OFF switch located to the right side of the Terminal. The Select switches should be set for HALF DUPLEX. Select any character and hold that key depressed along with the REPEAT key and verify that the screen fills up with that character.

Adjust the brightness control until the raster is no longer visible and then adjust the contrast control for the most pleasing presentation. A moment spent on determining the optimum setting for both brightness and contrast controls is well spent since this will reduce operator fatigue and remember that the setting may require to be changed as ambient light levels change.

When entering the data from the keyboard, an audible alarm (beep) should be heard when the eighth character position from the end of each line is reached. This alarm serves the same purpose as the bell on a typewriter. The only other condition that will cause the alarm to sound will be the reception of the bell code (CTRL) (G). Characters will enter on the bottom line and the display will move up one position as each line is filled.

For your convenience, two of the common signal indicators available from your communications modem have been extended through the Video Display Terminal to the front panel where they activate lamp indicators. The lamp (CD) will indicate CARRIER DETECT and the lamp (RS) will indicate READY TO SEND.

TRANSMISSION MODES

The Video Display Terminal is designed for serial transmission over data lines. Transmission may be HALF DUPLEX (computer to display alternates with keyboard to display and computer), or FULL DUPLEX (computer to display simultaneous with keyboard to computer). The attention of the user is drawn to the fact that the terminal is factory-programmed for two particular transmission speeds, with one or two Bits as stop mark.

CONTROLS

The control functions should now be checked in the Half Duplex Mode to verify that:

REPEAT:	Standard Keyboard Controls used in conjunction with any other character or function to cause a repeat.
CARRIAGE RETURN:	Causes the cursor to move to the first position of the line.
LINE FEED: ↓	Moves the display up one row from bottom row.
SHIFT:	Located on both sides of the keyboard; used with dual legend keys to select the upper legend.

ELITE 1520A APL/ASCII

FRONT PANEL CONTROLS

1. TAPE - when this switch is depressed, it enables the unit to store and display control codes. Its function is identical to the TAPE key located on the keyboard.

2. FULL DUP - when this switch is depressed the unit is placed in FULL DUPLEX mode. With the switch up, the unit is in HALF DUPLEX, in which data is transmitted to the line as well as to the display.

3. DATA RATE - Enables the user to select one of two factory-programmed bit rates. Speed one is selected when the switch is in the up position.

4. EIA - selects the transmit/receive interface. When pressed, the unit will operate through the EIA standard interface. If the unit is equipped with a current loop interface, it will be selected when the switch is up.

5. ASCII - with this switch depressed, the terminal will operate as a normal ASCII unit with an upper and lower case display. With the switch up, in the APL mode, the terminal will display APL character fonts and upper case ASCII characters. The transmission codes will remain the same. Overstruck characters can be formed by using the BACK CURSOR control.

GENERAL OPERATING INFORMATION

The Elite 1520A APL/ASCII has been designed to receive and transmit data up to 9600 baud and perform all functions with no additional controls.

1. Home (EM) - will return the cursor to the Home position (first character, first line).

2. Forward Cursor (FS) - a non-destruct code, will cause the cursor to advance one character position to the right. If there are no character positions to the right, the cursor will advance to the first character of the next line.

3. Back Cursor (BS) - a non-destruct code, will move the cursor one character position to the left. If the cursor is in the first character position, it will move to the eightieth character position of the line above.

4. Up Row Cursor (US) - a non-destruct code, will cause the cursor to move up one row. When the first row is reached the cursor will remain there.

5. Down Row Cursor (LF) - a non-destruct code, will move the cursor down one row. When the last row is reached it will move the data up one row leaving the last row blank.

6. Return (CR) - a non-destruct code, will move the cursor to the first character position of the line. Can be strapped to provide an automatic line feed.

7. Erase to End of Line (GS) - This code will erase all data from the cursor to the end of line.

8. Erase to End of Page (VT) - This code will erase all data from the cursor to end of page.

9. Erase (FF) - This code will erase all data and home the cursor.

10. Start Address (RS) - This code will place the terminal in the X-Y addressing mode. The next character will be the character address, and the following character the row address. Data may be entered from that point in the normal manner.

11. Printer On (SO) - This code will cause all receive or transmit data to be directed to the printer output, which is an RS232 Interface.

12. Printer Off (SI) - This code will remove the printer output connection.

13. Horizontal Tab (HT) - fixed to every eighth character position. Can be strapped to provide a tab to every fourth character position. The tabs are not dependent on the starting point of the cursor.

14. Programmable Lead-in Character (ESC) - when enabled, requires the decoding of an ESC code before any of the following codes can be operated on: HT, VT, FF, SO, SI, GS, RS.

STANDARD FEATURES AVAILABLE

A. PARITY GENERATION

The system transmits even parity; however, the parity bit may be forced to a constant mark by use of an internal program strap.

B. TWO SPEED SELECTION

The system has made two speeds available to the user in the manner of a mode switch on the keyboard panel. Speeds available are in the range of 50 baud up to 9600 baud.

C. FULL/OR HALF DUPLEX SWITCH

Selectable from front panel.

D. RECEIVE/TRANSMIT TO PRINTER

Control Code Selectable.

E. LINE CONDITIONS

Lamp indicators on the front panel, (CD) Carrier Detect and (RS) Ready to Send.

F. CURSOR CONTROL

Non-destructive, up, down, right, left, home.

G. AUDIBLE END OF LINE INDICATOR

Audible end of line bell sounds when the 72nd character of a line is entered; also, sounds when the "bell" character is received.

H. X-Y COORDINATES

X-Y coordinates cursor positioning.

I. ROLL MODE

Roll type operation from bottom line of display.

J. EIA INTERFACE

K. FIXED TAB

L. PROGRAMMABLE LEAD-IN CHARACTER

M. APL OR ASCII OPERATION

OPTIONAL FEATURES

A. Optical Interface - 20 milliamp

B. 1200 or 300 Baud Integral Modem

C. Optional Control Sets (factory-programmed as required by user)

CONTROLS PROVIDED WITH OPTIONAL LOWER CASE KEYBOARD

EOL:	Erase data from cursor to end of the line
EOS:	Erase data from cursor to end of page
CLEAR:	Erase Page and home cursor
TAPE:	Mode key controls Tape mode entry
PRINT OFF:	Stops output to printer
PRINT:	Enables output to printer
UP ROW CURSOR: ↑	Up row cursor
BACK CURSOR: ←	Back cursor
HOME:	Home
FORWARD CURSOR: →	Forward Cursor
DOWN CURSOR: ↓	Down Cursor
TAB:	Tab

ELITE 1520-APL

0	0	7	BITS		7
0	0	6			6
0	1	5	BITS		5
CONTROL		4	3	2	1
NUL	**DLE**	0	0	0	0
SOH	**DC1**	0	0	0	1
STX	**DC2**	0	0	1	0
ETX	**DC3**	0	0	1	1
EOT	**DC4**	0	1	0	0
ENQ	**NAK**	0	1	0	1
ACK	**SYN**	0	1	1	0
BEL	**ETB**	0	1	1	1
BS ← *	**CAN**	1	0	0	0
HT TAB	**EM** HOME	1	0	0	1
LF ↓ *	**SUB**	1	0	1	0
VT ERASE EOP	**ESC** ESC	1	0	1	1
FF CLEAR	**FS** → *	1	1	0	0
CR RETURN	**GS** ERASE EOL	1	1	0	1
SO PRINT	**RS** X-Y ADDRESS	1	1	1	0
SI PRINT OFF	**US** ↑ *	1	1	1	1

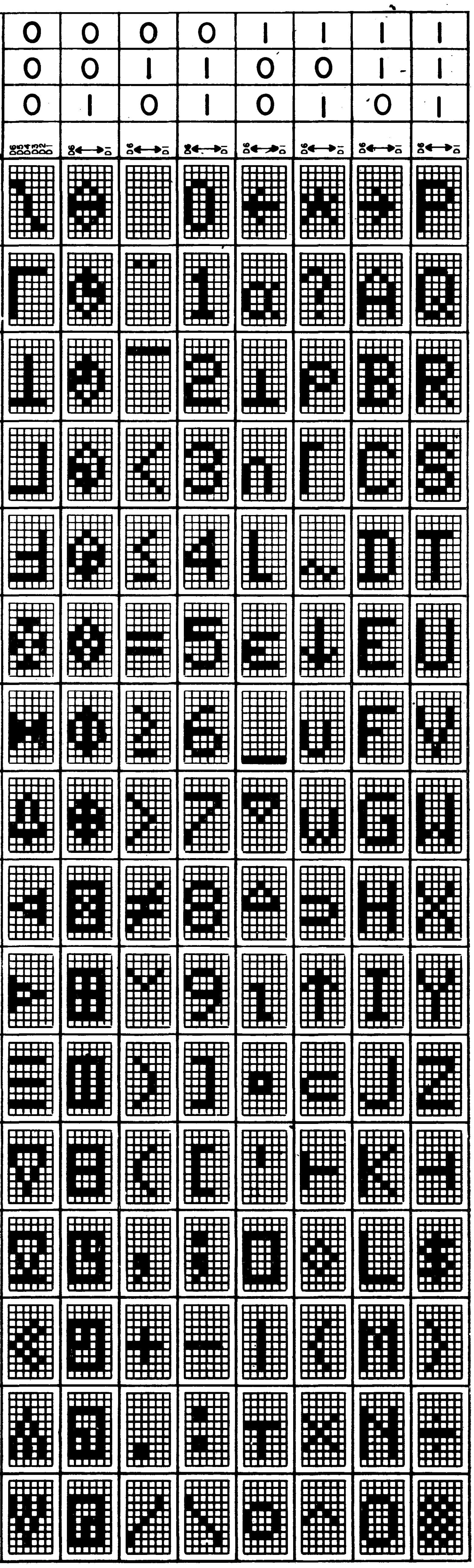
0 0 0 0 1 1 1 1
0 0 1 1 0 0 1 1
0 1 0 1 0 1 0 1
D6 D5 D4 D3 D2 D1
D6 ←→ D1
R0 R1 R2 R3 R4 R5 R6 R7 R8 R9
R0 ↕ R9

*→ CURSOR CONTROL

ELITE 1520 UPPER/LOWER CASE

0	0	7 BITS				7	0	0	0	0	1	1	1	1
0	0	6				6	0	0	1	1	0	0	1	1
0	1	5 BITS				5	0	1	0	1	0	1	0	1
CONTROL		4	3	2	1		D6 D5 D4 D3 D2 D1 D0	D6 ↔ D0	D6 ↔ D0	D6 ↔ D0	D6 ↔ D0	D6 ↔ D0	D6 ↔ D0	D6 ↔ D0
NUL	DLE	0	0	0	0	R0 R1 R2 R3 R4 R5 R6 R7 R8 R9	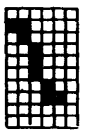	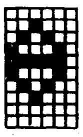		0	@	P	`	p
SOH	DC1	0	0	0	1	R0 ↕ R9	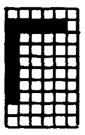	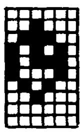	!	1	A	Q	a	q
STX	DC2	0	0	1	0	R0 ↕ R9	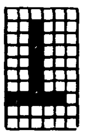	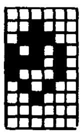	"	2	B	R	b	r
ETX	DC3	0	0	1	1	R0 ↕ R9	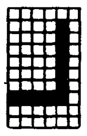	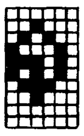	#	3	C	S	c	s
EOT	DC4	0	1	0	0	R0 ↕ R9	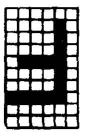	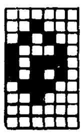	$	4	D	T	d	t
ENQ	NAK	0	1	0	1	R0 ↕ R9	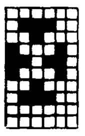	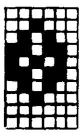	%	5	E	U	e	u
ACK	SYN	0	1	1	0	R0 ↕ R9	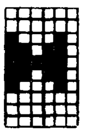	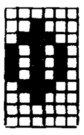	&	6	F	V	f	v
BEL	ETB	0	1	1	1	R0 ↕ R9	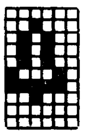	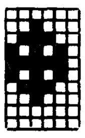	'	7	G	W	g	w
BS ←*	CAN	1	0	0	0	R0 ↕ R9	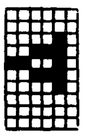	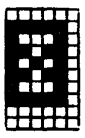	(	8	H	X	h	x
HT TAB	EM HOME	1	0	0	1	R0 ↕ R9	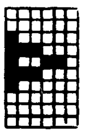	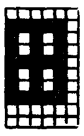	)	9	I	Y	i	y
LF ↓*	SUB	1	0	1	0	R0 ↕ R9	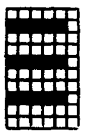	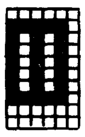	*	:	J	Z	j	z
VT ERASE EOS	ESC ESC	1	0	1	1	R0 ↕ R9	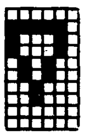	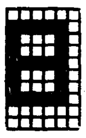	+	;	K	[	k	{
FF MASTER RESET	FS →*	1	1	0	0	R0 ↕ R9	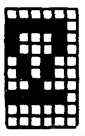	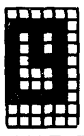	,	<	L	\	l	|
CR RETURN	GS ERASE EOL	1	1	0	1	R0 ↕ R9	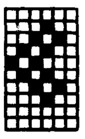	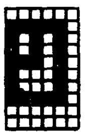	-	=	M	]	m	}
SO PRINT	RS X-Y ADDRESS	1	1	1	0	R0 ↕ R9	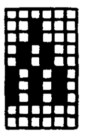	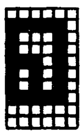	.	>	N	↑	n	~
SI PRINT OFF	US ↑*	1	1	1	1	R0 ↕ R9	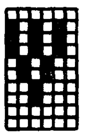	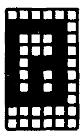	/	?	O	←	o	▒

*→ CURSOR CONTROL

ELITE-1520
TYPEWRITER PAIRED-APL

Bit 7	0	0				
Bit 6	0	0				
Bit 5	0	1				
	CONTROL		BITS 4	3	2	1
	NUL	**DLE**	0	0	0	0
	SOH	**DC1**	0	0	0	1
	STX	**DC2**	0	0	1	0
	ETX	**DC3**	0	0	1	1
	EOT	**DC4**	0	1	0	0
	ENQ	**NAK**	0	1	0	1
	ACK	**SYN**	0	1	1	0
	BEL	**ETB**	0	1	1	1
	BS ← *	**CAN**	1	0	0	0
	HT TAB	**EM** HOME	1	0	0	1
	LF ↓ *	**SUB**	1	0	1	0
	VT ERASE EOP	**ESC** ESC	1	0	1	1
	FF CLEAR	**FS** → *	1	1	0	0
	CR RETURN	**GS** ERASE EOL	1	1	0	1
	SO PRINT	**RS** X-Y ADDRESS	1	1	1	0
	SI PRINT OFF	**US** ↑ *	1	1	1	1

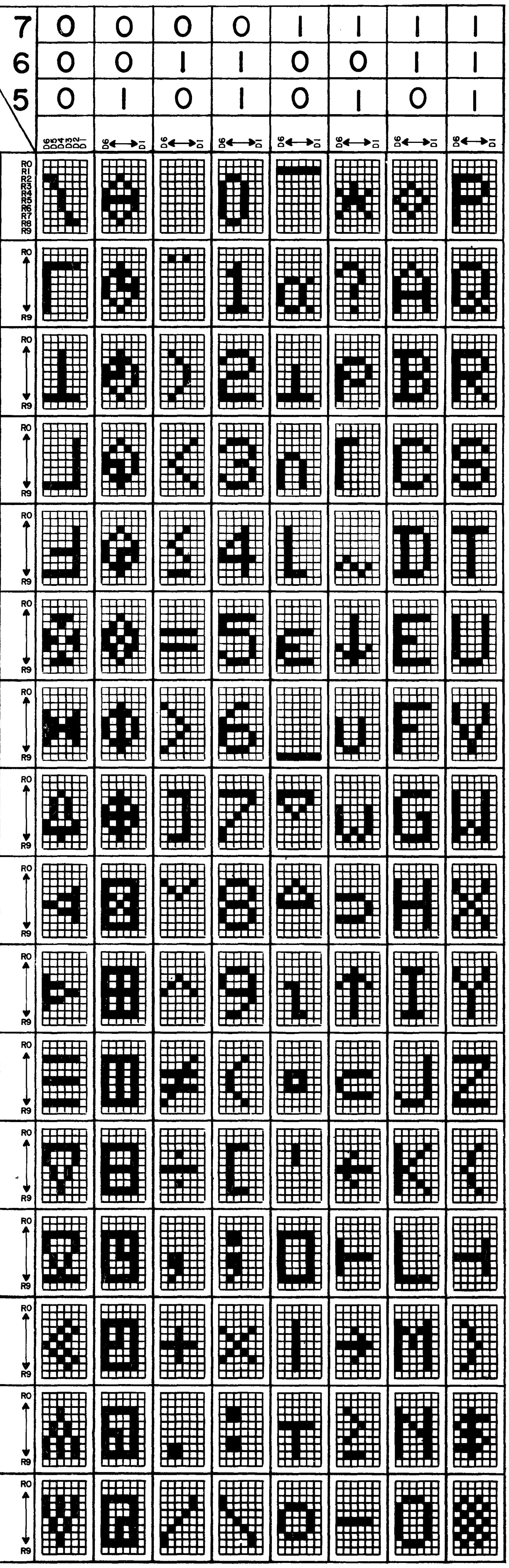

7 0 0 0 0 1 1 1 1
6 0 0 1 1 0 0 1 1
5 0 1 0 1 0 1 0 1
D6 D5 D4 D3 D2 D1
D6 ↔ D1
R0 R1 R2 R3 R4 R5 R6 R7 R8 R9
R0 ↕ R9

* → CURSOR CONTROL

ELITE 1520 UPPER/ LOWER CASE
ANSI STANDARD

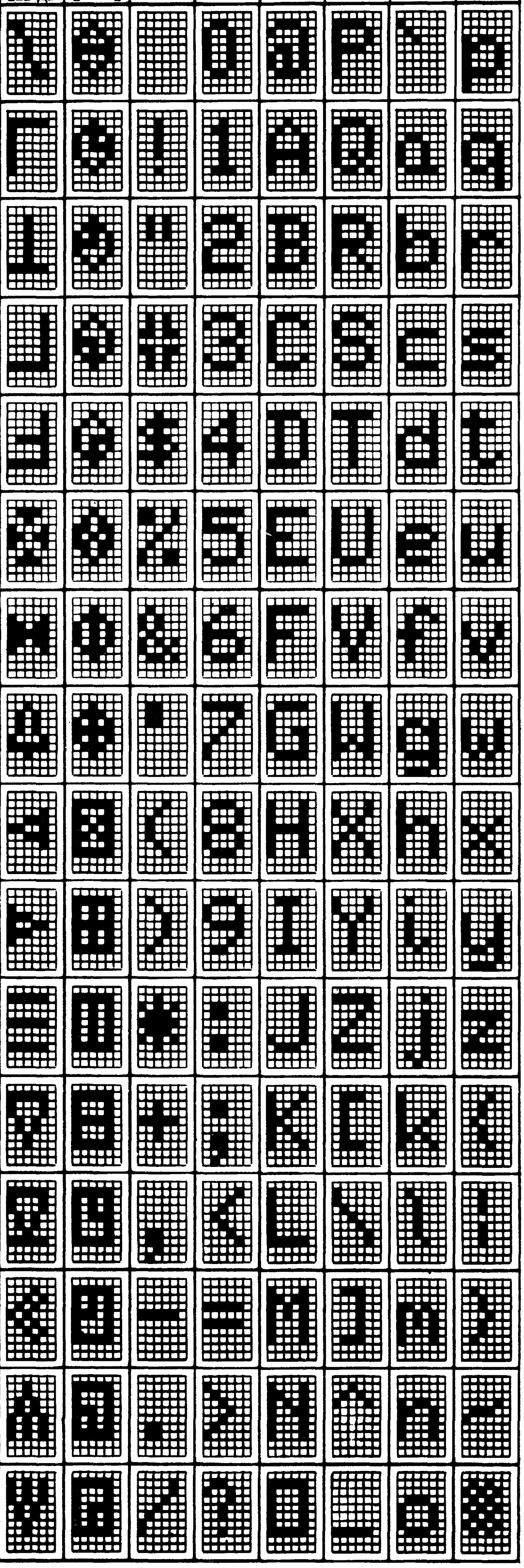

0	0	7 BITS				7	0	0	0	0	1	1	1	1
0	0	6				6	0	0	1	1	0	0	1	1
0	1	5 BITS				5	0	1	0	1	0	1	0	1
CONTROL		4	3	2	1		D6 D5 D4 D3 D2 D1	D6←→D1	D6←→D1	D6←→D1	D6←→D1	D6←→D1	D6←→D1	D6←→D1
NUL	DLE	0	0	0	0	R0 R1 R2 R3 R4 R5 R6 R7 R8 R9				0	@	P	`	p
SOH	DC1	0	0	0	1	R0 ↕ R9			!	1	A	Q	a	q
STX	DC2	0	0	1	0	R0 ↕ R9			"	2	B	R	b	r
ETX	DC3	0	0	1	1	R0 ↕ R9			#	3	C	S	c	s
EOT	DC4	0	1	0	0	R0 ↕ R9			$	4	D	T	d	t
ENQ	NAK	0	1	0	1	R0 ↕ R9			%	5	E	U	e	u
ACK	SYN	0	1	1	0	R0 ↕ R9			&	6	F	V	f	v
BEL	ETB	0	1	1	1	R0 ↕ R9			'	7	G	W	g	w
BS ←*	CAN	1	0	0	0	R0 ↕ R9			(	8	H	X	h	x
HT TAB	EM HOME	1	0	0	1	R0 ↕ R9			)	9	I	Y	i	y
LF ↓*	SUB	1	0	1	0	R0 ↕ R9			*	:	J	Z	j	z
VT ERASE EOS	ESC ESC	1	0	1	1	R0 ↕ R9			+	;	K	[	k	{
FF MASTER RESET	FS →*	1	1	0	0	R0 ↕ R9			,	<	L	\	l	|
CR RETURN	GS ERASE EOL	1	1	0	1	R0 ↕ R9			-	=	M	]	m	}
SO PRINT	RS X-Y ADDRESS	1	1	1	0	R0 ↕ R9			.	>	N	^	n	~
SI PRINT OFF	US ↑*	1	1	1	1	R0 ↕ R9			/	?	O	_	o	▒

*→ CURSOR CONTROL

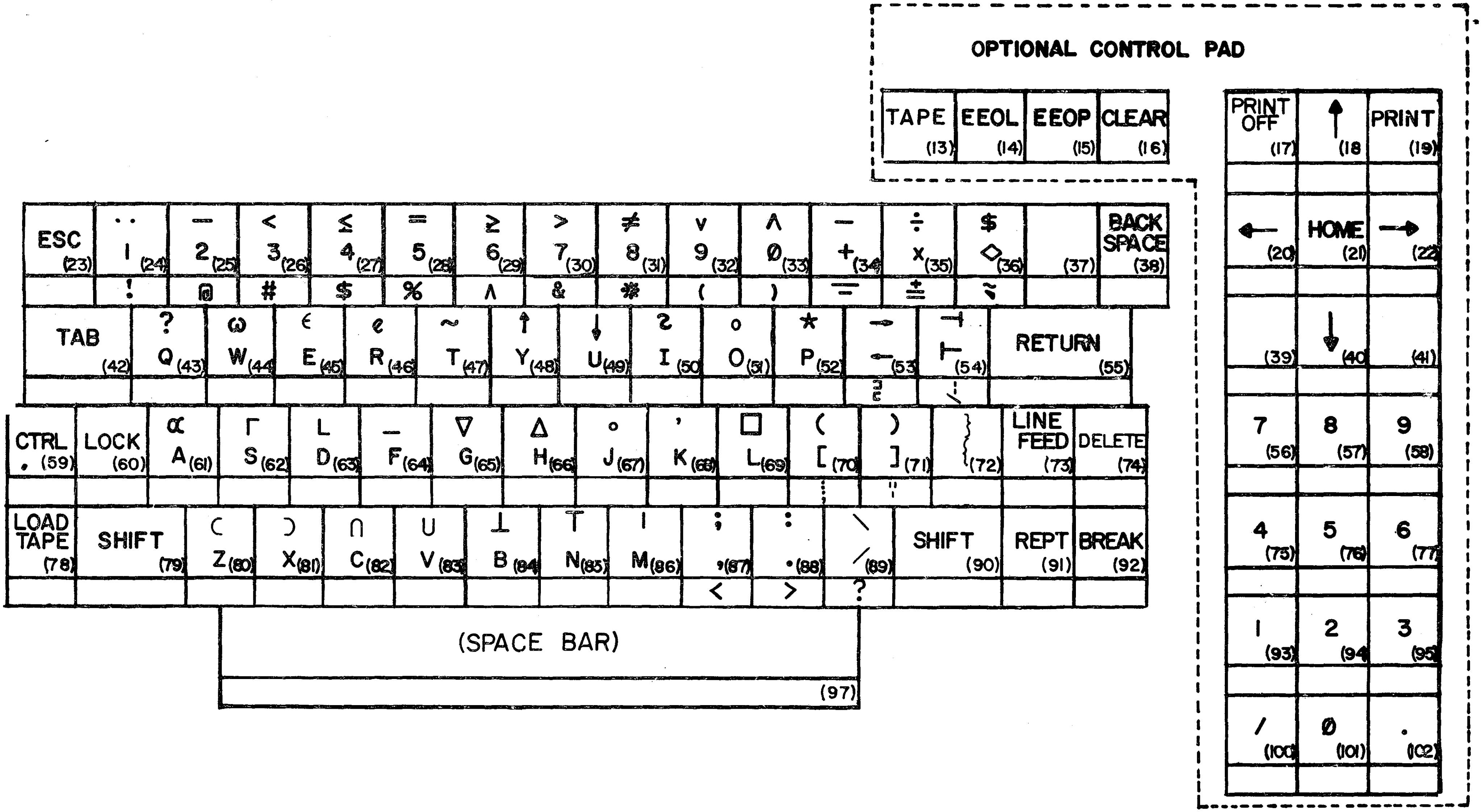
OPTIONAL CONTROL PAD
TAPE (13)
EEOL (14)
EEOP (15)
CLEAR (16)
PRINT OFF (17)
↑ (18)
PRINT (19)
← (20)
HOME (21)
→ (22)
ESC (23)
¨ 1 (24) !
¯ 2 (25) @
< 3 (26) #
≤ 4 (27) $
= 5 (28) %
≥ 6 (29) ∧
> 7 (30) &
≠ 8 (31) *
∨ 9 (32) (
∧ 0 (33))
− + (34)
÷ x (35) ±
$ ◇ (36)
(37)
BACK SPACE (38)
(39)
↓ (40)
(41)
TAB (42)
? Q (43)
ω W (44)
ϵ E (45)
ρ R (46)
~ T (47)
↑ Y (48)
↓ U (49)
ι I (50)
○ O (51)
* P (52)
→ ← (53)
⊣ ⊢ (54)
RETURN (55)
7 (56)
8 (57)
9 (58)
CTRL , (59)
LOCK (60)
α A (61)
⌈ S (62)
⌊ D (63)
_ F (64)
∇ G (65)
∆ H (66)
∘ J (67)
' K (68)
⎕ L (69)
([(70)
)] (71)
} { (72)
LINE FEED (73)
DELETE (74)
4 (75)
5 (76)
6 (77)
LOAD TAPE (78)
SHIFT (79)
⊂ Z (80)
⊃ X (81)
∩ C (82)
∪ V (83)
⊥ B (84)
⊤ N (85)
| M (86)
; , (87) <
: . (88) >
\ / (89) ?
SHIFT (90)
REPT (91)
BREAK (92)
1 (93)
2 (94)
3 (95)
(SPACE BAR) (97)
/ (100)
0 (101)
. (102)

APL KEYBOARD-TYPEWRITER PAIRED

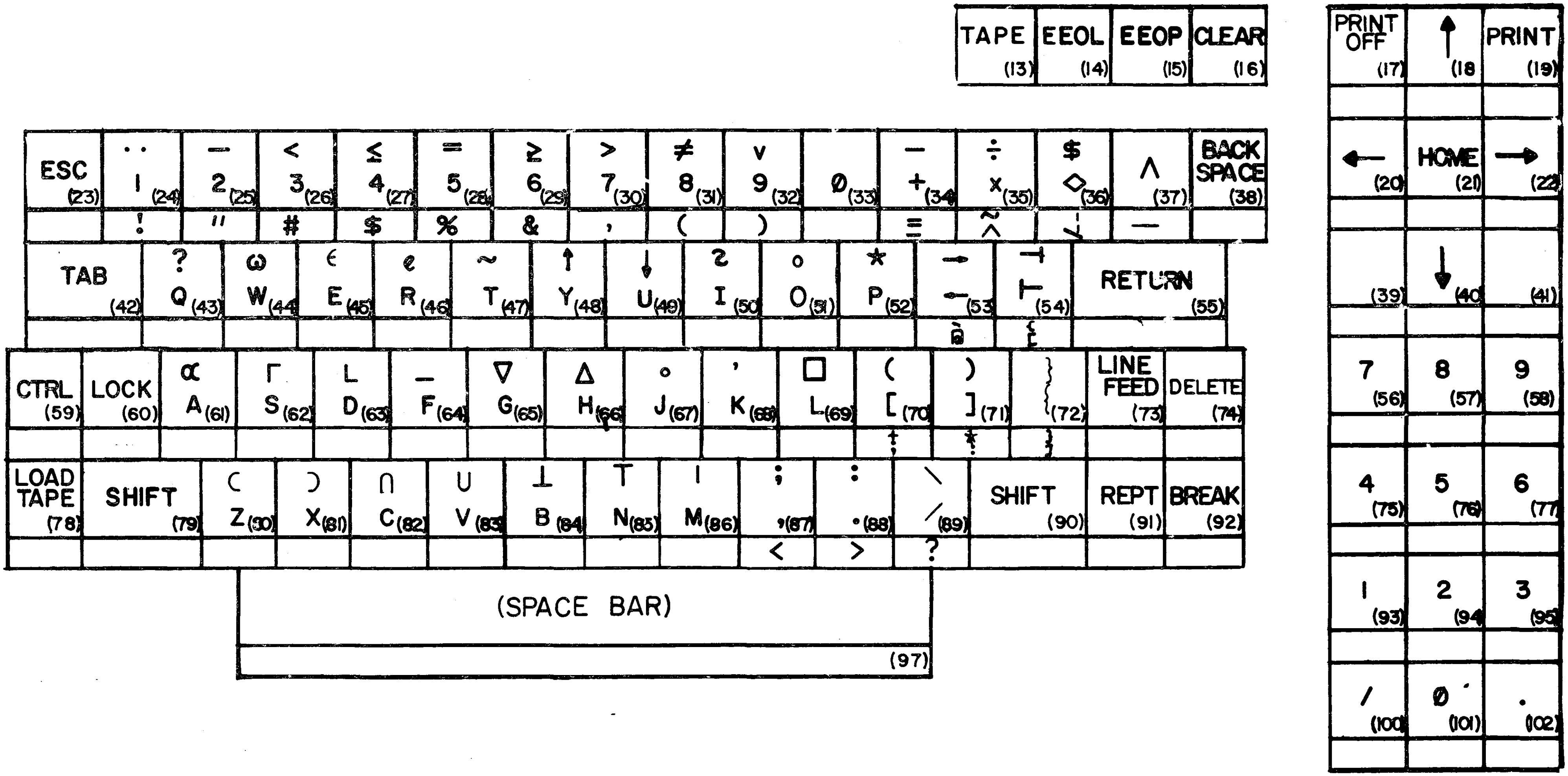
TAPE (13)
EEOL (14)
EEOP (15)
CLEAR (16)
PRINT OFF (17)
(18)
PRINT (19)
ESC (23)
1 (24) !
2 (25) "
3 (26) #
4 (27) $
5 (28) %
6 (29) &
7 (30) ,
8 (31) (
9 (32))
Ø (33)
+ (34) =
x (35)
$ (36)
∧ (37)
BACK SPACE (38)
(20)
HOME (21)
(22)
TAB (42)
Q (43)
W (44)
E (45)
R (46)
T (47)
Y (48)
U (49)
I (50)
O (51)
P (52)
(53)
(54)
RETURN (55)
(39)
(40)
(41)
CTRL (59)
LOCK (60)
A (61)
S (62)
D (63)
F (64)
G (65)
H (66)
J (67)
K (68)
L (69)
[(70)
] (71)
(72)
LINE FEED (73)
DELETE (74)
7 (56)
8 (57)
9 (58)
LOAD TAPE (78)
SHIFT (79)
Z (80)
X (81)
C (82)
V (83)
B (84)
N (85)
M (86)
, (87) <
. (88) >
/ (89) ?
SHIFT (90)
REPT (91)
BREAK (92)
4 (75)
5 (76)
6 (77)
(SPACE BAR)
(97)
1 (93)
2 (94)
3 (95)
/ (100)
Ø (101)
. (102)

CODE GENERATION

TABLE I

This chart gives the codes that can be transmitted from the Elite 1520 keyboard.

Bit 7 →					0	0	0	0	1	1	1	1
Bit 6 →					0	0	1	1	0	0	1	1
Bit 5 →					0	1	0	1	0	1	0	1
Col →					0	1	2	3	4	5	6	7
Bit 4 ↓	Bit 3 ↓	Bit 2 ↓	Bit 1 ↓	Row ↓	Note 4	Note 2	Note 3	Note 1			Note 5	
0	0	0	0	0	NUL	DLE	SP	0	@	P	`	p
0	0	0	1	1	SOH	DC1	!	1	A	Q	a	q
0	0	1	0	2	STX	DC2	"	2	B	R	b	r
0	0	1	1	3	ETX	DC3	#	3	C	S	c	s
0	1	0	0	4	EOT	DC4	$	4	D	T	d	t
0	1	0	1	5	WRU	NAK	%	5	E	U	e	u
0	1	1	0	6	ACK	SYN	&	6	F	V	f	v
0	1	1	1	7	BEL	ETB	'	7	G	W	g	w
1	0	0	0	8	BS*	CAN	(	8	H	X	h	x
1	0	0	1	9	HT*	EM*	)	9	I	Y	i	y
1	0	1	0	10	LF*	SUB	*	:	J	Z	j	z
1	0	1	1	11	VT*	ESC	+	;	K	[	k	{
1	1	0	0	12	FF*	FS*	,*	<	L	\	l	¦
1	1	0	1	13	CR*	GS*	-*	=	M	]	m	}
1	1	1	0	14	SO*	RS*	.*	>	N	↑	n	~
1	1	1	1	15	SI*	US*	/*	?	O	←	o	Rub

Note 1. *available on the keyboard (see General Operating Information). (Optional)

Note 2. Can be transmitted by (CTRL) key and adjacent character column 5 (some characters available on the keyboard).

Note 3. Can be displayed by (shift) key and adjacent character column 3 (some characters available on the keyboard).

Note 4. Can be transmitted by (CTRL) key and adjacent character column 4 (some characters available on the keyboard). (displayed in Tape Mode)

Note 5. Can be transmitted and displayed in the lower case form. (Optional)

CONTROL CODE FONT
ASCII

B1	B2	B3	B4	B5	B6	B7	Octal	Display Char.	ASCII
0	0	0	0	0	0	0	000		NUL
1	0	0	0	0	0	0	001		SOH
0	1	0	0	0	0	0	002		STX
1	1	0	0	0	0	0	003		ETX
0	0	1	0	0	0	0	004		EOT
1	0	1	0	0	0	0	005		WRU
0	1	1	0	0	0	0	006	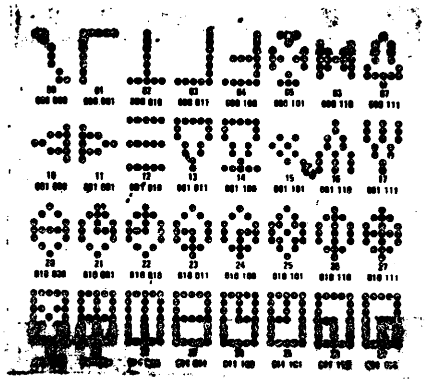	ACK
1	1	1	0	0	0	0	007		BEL
0	0	0	1	0	0	0	010		BS
1	0	0	1	0	0	0	011		HT
0	1	0	1	0	0	0	012		LF
1	1	0	1	0	0	0	013		VT
0	0	1	1	0	0	0	014		FF
1	0	1	1	0	0	0	015		CR
0	1	1	1	0	0	0	016		SO
1	1	1	1	0	0	0	017		SI
0	0	0	0	1	0	0	020		DLE
1	0	0	0	1	0	0	021		DC1
0	1	0	0	1	0	0	022		DC2
1	1	0	0	1	0	0	023		DC3
0	0	1	0	1	0	0	024		DC4
1	0	1	0	1	0	0	025		NAK
0	1	1	0	1	0	0	026		SYN
1	1	1	0	1	0	0	027		ETB
0	0	0	1	1	0	0	030		CAN
1	0	0	1	1	0	0	031		EM
0	1	0	1	1	0	0	032		SUB
1	1	0	1	1	0	0	033		ESC
0	0	1	1	1	0	0	034		FS
1	0	1	1	1	0	0	035		GS
0	1	1	1	1	0	0	036		RS
1	1	1	1	1	0	0	037		US

TECHNICAL DESCRIPTION

A. INTRODUCTION

The information contained in this manual applies to the Upper/ Lower case Elite 1520A APL/ASCII Video Display Terminal.

B. GENERAL

1. Power Supply
2. Monitor
3. Backplane
4. Mode Switches
5. Memory Display Board
6. 7-Level Memory (Part of Unit 5)
7. Recirculation Registers (Part of Unit 5)
8. ROM (Part of Unit 5)
9. Output Register and Mixer (Part of Unit 5)
10. Timing Board
11. Video Timing (Part of Unit 10)
12. Memory Timing (Part of Unit 10)
13. Transceiver
14. Speed Control Timing (Part of Unit 13)
15. UAR/T (Part of Unit 13)
16. Memory Coincidence Timing (Part of Unit 13)
17. Memory Control Timing (Part of Unit 13)
18. Upper and Lower Case Keyboard
19. Keyboard Cable and Base
20. APL Memory Display

1. Power Supply provides four independently regulated voltage buss levels: +15, +12, -12 and +5. The three higher voltage regulators are 1 Amp regulator chips, using external components for voltage adjustments. These chips are internally current limited, have thermal shut down and are essentially blowout proof. The 5 Volt circuit has an IC regulator with external booster transistors added. Foldback current limiting is employed. Protective diodes across the busses protect each regulator against accidental buss-to-buss shorts. The output voltage of each buss is adjustable over a limited voltage range by 'trim-pots' mounted on the power supply PC board.

   The 5V supply is provided with over-voltage protection which is normally set up so that a rise of voltage on the buss above the preset limit will cause the over-voltage protective circuit to trip, which effectively crowbars the supply. The load connected externally to the 5V supply is further protected against a catastrophic power supply failure, such as a shorted 'pass transistor' by a fuse in series with the raw DC input to the regulator. If the over-voltage protection is tripped as a result of some transient phenomena, the supply may be reset by momentarily turning off the primary AC power input.

   The power supply transformer is provided with a split primary winding which allows the primary to be connected for either 117V AC or 230V AC nominal operation to suit domestic and/or European requirements. The transformer is also provided with an electrostatic shield between primary and secondary windings in accordance with GPO requirements. Since AC fusing appears in the Elite 1520A APL/ASCII of which the power supply is a sub-assembly, there is no provision for primary fusing on the supply itself.

2.1 MONITOR DESCRIPTION

The TV monitor is a solid-state unit for use in industrial and commercial installations where reliability and high quality video reproduction are desired.

The monitor features printed circuit board construction for reliability and uniformity. All circuits of the TV monitor are transistorized. The synchronization circuits have been custom designed to accept vertical and horizontal drive signals thus enabling the interfacing of this monitor with industrial or simple sync sources. This feature simplifies the user's sync processing and mixing and allows the unit to operate without requiring composite sync. The electronic packaging has been miniaturized for compatibility with small volume requirements.

Internal Set Up Controls

(1) Height

(2) Vertical Linearity

(3) Vertical Hold

(4) Focus

(5) Width

External Set Up Controls

(1)	Brightness	(100 Kilohm potentiometer ≥ 1/8 Watt)
(2)	Contrast	(500 ohm potentiometer ≥ 1/8 Watt)

The Brightness and Contrast controls are mounted on the right-hand side of the controller above the ON/OFF switch.

3. Backplane - utilizes four 60 pin leaf pin type connections.

4. Mode Switch - an eight-position, double pole, double throw switch assembly. Five switches are used as single pole, single throw.

5. Memory Display Board - 2DAAA018 (Units 6, 7, 8, 9)

6. Memory - made up of dual 512-bit MOS dynamic shift registers. These registers are arranged to make a 2048 bit shift register. The seven ASCII Data bits are stored in these registers in a parallel arrangement.

7. Recirculating Registers - are Quad 80-bit dynamic shift registers with an internal recirculating path.

8. R.O.M. - SCM3094L - is an Upper/Lower case, 128 character, 5 x 9 static character generator.

9. Output Register and Mixer - the output register is a 5-bit parallel in, werial out shift register. The mixer modulates Video Data and Composite Sync to develop Composite Video.

10. Video Timing - 380DAE0600, 380DAE1000 (Units 11, 12)

11. Memory Timing - the memory timing is driven by a 9.36 MHz oscillator. There are three memory counters: Video Bit Counter is a three-stage shift register, Memory Character Counter is a seven-stage divide by 80 counter, and Memory Row Counter is a five-stage divide by 32 counter. The arrangement of these counters develop 01 and 02 memory clocks, which occur 2048 times per memory timing cycle.

12. Video Timing - driven by a 9.36 MHz oscillator. There are four Video Counters: the Video Bit Counter is a four-stage divide by six counter shift register, Video Character Counter is an eight-stage divide by 100 counter, Video Line Counter is a four-stage divide by 10 counter, and Video Row Counter is a five-stage divide by 26 or 31 counter for 60 Hz or 50 Hz respectively, exactly 260 lines or 312 lines respectively.

13. Transceiver - 2DAAA016 (Units 14, 15, 16, 17)

14. Special Control Timing - a 12-stage programmable counter designed to divide 3.12 MHz by 2 to 4097. Its output is equal to 16 times the operating baud rate. It is controlled by two program gates. (See Page 20 for Programming Information)

15. UAR/T - The Universal Asynchronous Receiver/Transmitter is an LSI subsystem which receives and transmits binary characters from the Keyboard in parallel or from a computer in serial.

    FEATURES

    DTL and TTL Compatible--no interfacing circuits required--drives one TTL load.

    Fully Double Buffered--eliminates need for system synchronization, facilitates high-speed operation.

    Full Duplex Operation--can handle multiple baud rates (receiving-transmitting) simultaneously.

    Start Bit Verification--decreases error rate with center sampling.

    Receiver center sampling of serial input; above 40% distortion immunity.

16. Memory Coincidence Timing - is a comparison of Memory Character Timing (MC#) to the Static Character count (CC#) along with Memory Row count (MR#) to the Static Row count (CR#) to develop (MC) and (DCOIN).

17. Memory Control Timing - is the gating control circuits necessary to recognize control codes as they are received and complete their operation within one character time at 9600 baud. (See General Operating Information for Control Codes)

18. Upper/Lower Case Keyboard - The Elite 1520A APL/ASCII Keyboard circuit is designed with a divide by 16 counter for keyboard bits 1 through 4. The counter advances continuously until a key is depressed. When a key is depressed, the counter will stop at the count determined by the key depressed. The counter outputs will be gated into bits 5 through 7 in order to develop output bits 1 through 7. The gating that develops bits 5 through 7 generates Keyboard Strobe.

    Keyboard Strobe is delayed to compensate for switch bounce. Keyboard Strobe remains for a short period of time after the key has been released. The coding of the key is determined by the ASCII character code required.

19. Keyboard Cable and Base - The keyboard cable length is 6' long and is terminated in a 25-pin male cinch Jones connector.

20. APL Memory Display - The APL Memory Display has the same basic blocks as the ASCII Memory Display. The only basic difference is in APL Mode, it generates an $\overline{LD2}$ for the second Memory and has output recirculating gates that control R.O.M. output of ASCII or APL data to display.

DATA RATE PROGRAMMING

Data Rate selector switch: programmable for two speed control.

DATA RATE PROGRAMMING

SPEED	F	E	D	C	B	A	H	ACTUAL SPEED
50	9	10	11	12	4	5	6	50
75	2	10	3	12	6			75
110	2	10	11	4	6	7	8	110
150	9	2	11	5				150
300		10	4				8	300
600	1	2				7	9	600
1200	1				6		8	1196
1800	2		4		6	7		1806
2400	2	3	4			7	1	2407
3600		3	4		6			3611
4800	2	3			6		1	4756
7200			4	5			1	7222
9600	2			5				9750

$$\frac{195000}{\text{SPEED IN BAUD}} - 2 = \text{WEIGHT TO BE PROGRAMMED}$$

PROGRAMMING INFORMATION

It is recommended that whenever possible, logic cards should be returned to the factory for programming. Should you find it desirable to do it yourself, the following information is provided for your convenience.

A. Jack Locations - In the Elite 1520A APL/ASCII, the logic cards are arranged as follows:

Jack One - APL MEMORY DISPLAY
Jack Two - MEMORY DISPLAY
Jack Three - TIMING
Jack Four - TRANSCEIVER

Jacks are numbered from top to bottom. Access to the card cage is through the front panel.

B. Transceiver (J4) Programming:

1. Back Space: No back space from first character position--TT-UU.

2. Return: Auto line feed on CR--G1-F1.
   No auto line feed on CR--G1-H1.

3. Horizontal Tab: Every eighth character position--YY-ZZ
   Every fourth character position--cut YY-ZZ

4. Escape Lead-in Enabled--A1-B1

5. Parity:

Odd	G to M
Even	V to M (Factory)
None	V to J
One	J, G disconnected

6. Stop Bits:

1 Stop Bit (Speed 1)	Z to Y
1 Stop Bit (Speed 2)	AA to BB
2 Stop Bits	No Strap

7. Mark Parity: No Parity (See 5)
   2 Stop Marks (See 6)

Meta-char: J on UART: G ⇒ one, V ⇒ short.

INTERFACE INFORMATION

RS-232 Line Interface

The connectors shown in Table Two (2) are the communications interface for the Elite 1520A APL/ASCII.

TABLE 2
CONNECTION TO MODEM, EIA RS-232 INTERFACE
CONNECTOR TYPE CINCH DB-25

PIN ASSIGNMENT	FUNCTION
2	Transmit Data Mark = -6V, space = +6V
3	Receive Data Mark = -V, space = +V
4	Request to send +12 Volts
5	Clear to send
7	Signal Ground
8	Carrier on
10	Current loop receive +
11	Current loop receive -
20	Data terminal ready +12 Volts
18	Current loop Xmit +
25	Current loop Xmit -

INTERFACE INFORMATION

RS-232 Printer Interface

PIN ASSIGNMENT	FUNCTION
3	Transmit data mark = -6V, space = +6V
6	Request to send +12 Volts
8	Data terminal ready +12 Volts
7	Signal Ground

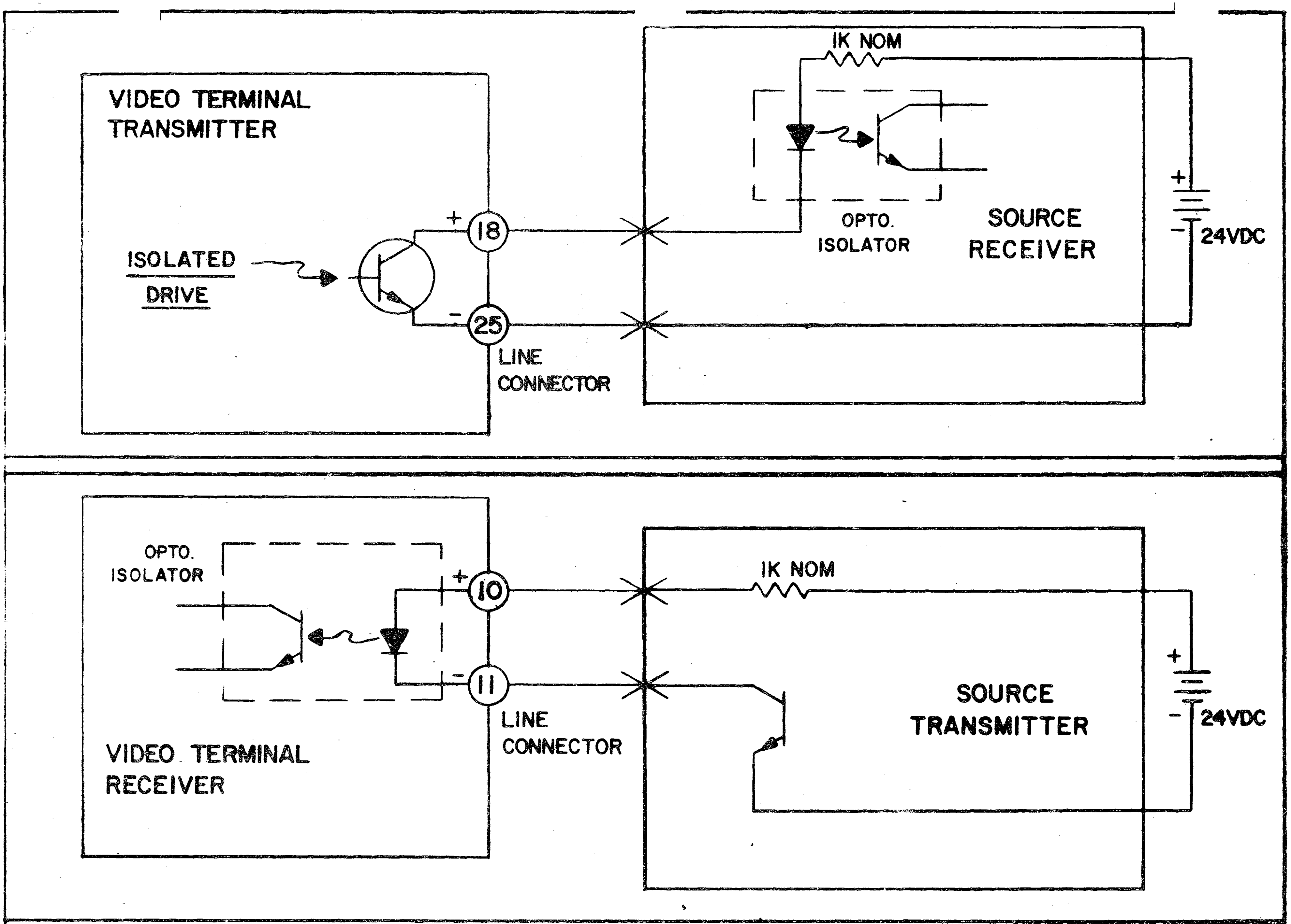
VIDEO TERMINAL TRANSMITTER
ISOLATED DRIVE
+
18
-
25
LINE CONNECTOR
IK NOM
OPTO. ISOLATOR
SOURCE RECEIVER
+
-
24VDC
OPTO. ISOLATOR
+
10
-
11
LINE CONNECTOR
VIDEO TERMINAL RECEIVER
IK NOM
SOURCE TRANSMITTER
+
-
24VDC

CURRENT LOOP INTERFACE EQUIVALENT TRANSMIT AND RECEIVE CIRCUITS SHOWING REQUIRED EXTERNAL CONNECTIONS

MAINTAINABILITY

The terminal is comprised of a group of modular sub-assemblies, bolted on a rigid metal chassis. The standard logic functions are contained on a group of four printed circuit cards mounted in a single card cage. All logic function cards are readily removable. The backplane wiring for the card cage is accessible by removing the back panel.

The power supply is a sub-assembly bolted to the main frame below the video monitor. The video monitor is a readily replaceable sub-assembly which is plug-connected to the control section of the terminal.

MODULE REPLACEMENT

The modular construction of the terminal lends itself to this approach; it is quite simple to diagnose video monitor or power supply failures, and replacement of either sub-assembly is also quite simple. Logic card failure can be diagnosed even if their functions are not known by a simple card substitution test. The above mentioned procedures, in most cases, will permit rapid restoral of normal operation. Problems with the keyboard can be similarly isolated.

P.C. CARD REPAIR

All sub-assemblies are burned-in and tested for a minimum of 72 hours before shipment; however, if a problem should occur, the factory or local facility has adequate test equipment on hand to permit rapid isolation of card and/or component failure.

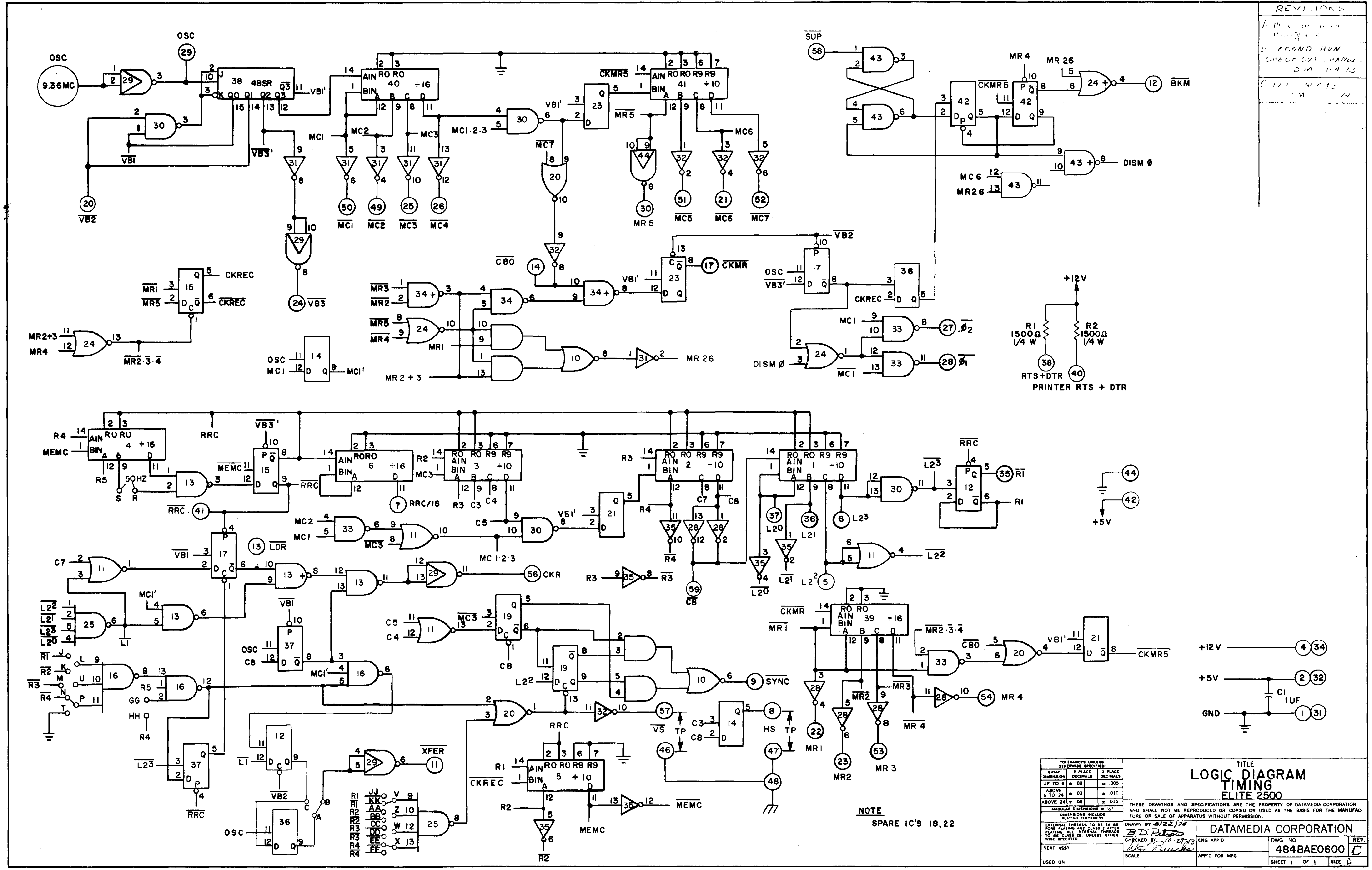
OSC
9.36MC
OSC
VB1
VB2
VB3'
4BSR
VB1'
÷16
MC1
MC2
MC3
MC4
MC1·2·3
CKMR5
MR5
MC7
MR 5
MC5
MC6
SUP
MR 4
MR 26
CKMR5
BKM
DISM Ø
MC 6
MR26
VB3
CKREC
MRI
MR5
MR2+3
MR4
MR2·3·4
MR3
MR2
MR4
MRI
MR 26
MR 2 + 3
C80
CKMR
OSC
VB3'
VB2
DISM Ø
Ø2
Ø1
+12V
R1 1500Ω 1/4 W
R2 1500Ω 1/4 W
RTS+DTR
PRINTER RTS + DTR
R4
MEMC
RRC
50HZ
S R
R5
RRC/16
R2
MC3
R3 C3 C4
÷10
R3
C7
C8
L20
L21
L22
L23
RI
+5V
C5
MC 1·2·3
LDR
CKR
XFER
MCI'
SYNC
VS
HS
TP
C1 1UF
GND
+12V
+5V
CKMR5
MR 4
MR1
MR2
MR3
CKREC
MEMC
R2
JJ KK AA BB CC DD EE FF
V Z W X
GG HH
J K L M N P T U

NOTE

SPARE IC'S 18,22

REVISIONS

A [illegible]

B SECOND RUN CHECKOUT CHANGE - DM 1-4-73

C [illegible] DM [illegible] 74

TOLERANCES UNLESS OTHERWISE SPECIFIED:		
BASIC DIMENSION	2 PLACE DECIMALS	3 PLACE DECIMALS
UP TO 6	± .02	± .005
ABOVE 6 TO 24	± .03	± .010
ABOVE 24	± .06	± .015

ANGULAR DIMENSIONS ± ½°

DIMENSIONS INCLUDE PLATING THICKNESS

EXTERNAL THREADS TO BE 2A BEFORE PLATING AND CLASS 2 AFTER PLATING ALL INTERNAL THREADS TO BE CLASS 2B, UNLESS OTHERWISE SPECIFIED

NEXT ASSY

USED ON

TITLE
LOGIC DIAGRAM
TIMING
ELITE 2500

THESE DRAWINGS AND SPECIFICATIONS ARE THE PROPERTY OF DATAMEDIA CORPORATION AND SHALL NOT BE REPRODUCED OR COPIED OR USED AS THE BASIS FOR THE MANUFACTURE OR SALE OF APPARATUS WITHOUT PERMISSION.

DRAWN BY 5/22/73 B.D. Petrow

CHECKED BY 10-29-73 W. Bucks

SCALE

DATAMEDIA CORPORATION

ENG APP'D

APP'D FOR MFG

DWG. NO. 484BAE0600

REV. C

SHEET 1 OF 1

SIZE C

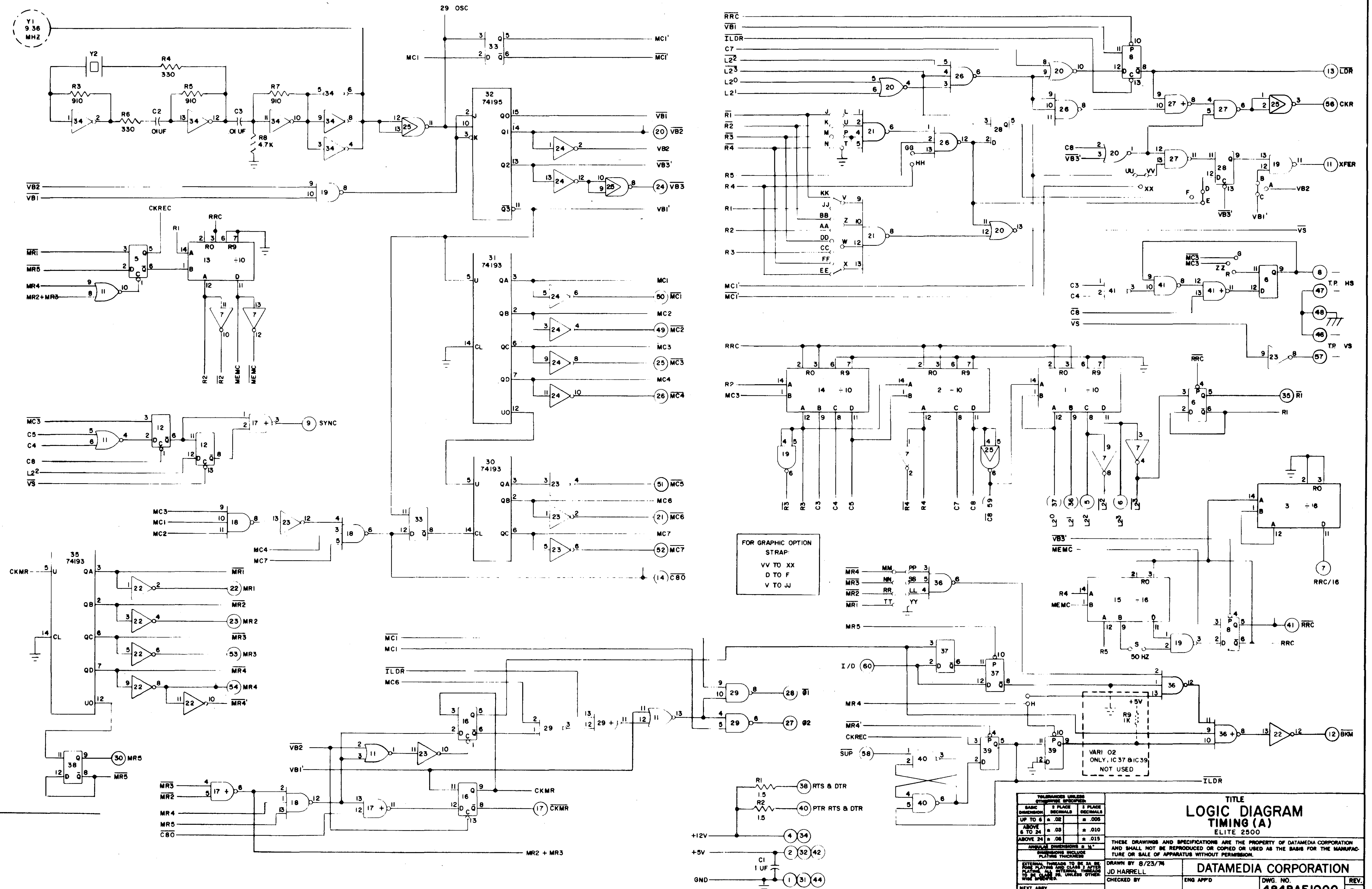

Y1 9.36 MHZ
Y2
29 OSC
32 74195
31 74193
30 74193
35 74193
CKREC
RRC
SYNC
CKMR
MR2 + MR3
RTS & DTR
PTR RTS & DTR
+12V
+5V
GND
LDR
CKR
XFER
T.P. HS
T.P. VS
RRC/16
50 HZ
BKM
I/D
SUP

FOR GRAPHIC OPTION STRAP:
VV TO XX
D TO F
V TO JJ

VARI 02 ONLY, IC 37 & IC 39 NOT USED

REV.
B RELEASED EN0086 5-29-74 WLB
C REV PER EN 0118 8-26-74 JDH
D REV PER EN 0251 7-18-75 RMS

TOLERANCES UNLESS OTHERWISE SPECIFIED:			
BASIC DIMENSION	2 PLACE DECIMALS		3 PLACE DECIMALS
UP TO 6	± .02		± .005
ABOVE 6 TO 24	± .03		± .010
ABOVE 24	± .06		± .015

ANGULAR DIMENSIONS ± ½°
DIMENSIONS INCLUDE PLATING THICKNESS
EXTERNAL THREADS TO BE 2A BEFORE PLATING AND CLASS 2 AFTER PLATING. ALL INTERNAL THREADS TO BE CLASS 2B, UNLESS OTHERWISE SPECIFIED.
NEXT ASSY
USED ON

TITLE
LOGIC DIAGRAM
TIMING (A)
ELITE 2500

THESE DRAWINGS AND SPECIFICATIONS ARE THE PROPERTY OF DATAMEDIA CORPORATION AND SHALL NOT BE REPRODUCED OR COPIED OR USED AS THE BASIS FOR THE MANUFACTURE OR SALE OF APPARATUS WITHOUT PERMISSION.

DRAWN BY 8/23/74
JD HARRELL
CHECKED BY
SCALE
ENG APP'D
APP'D FOR MFG
DATAMEDIA CORPORATION
DWG. NO. 484BAE1000
REV. D
SHEET 1 OF 1
SIZE D

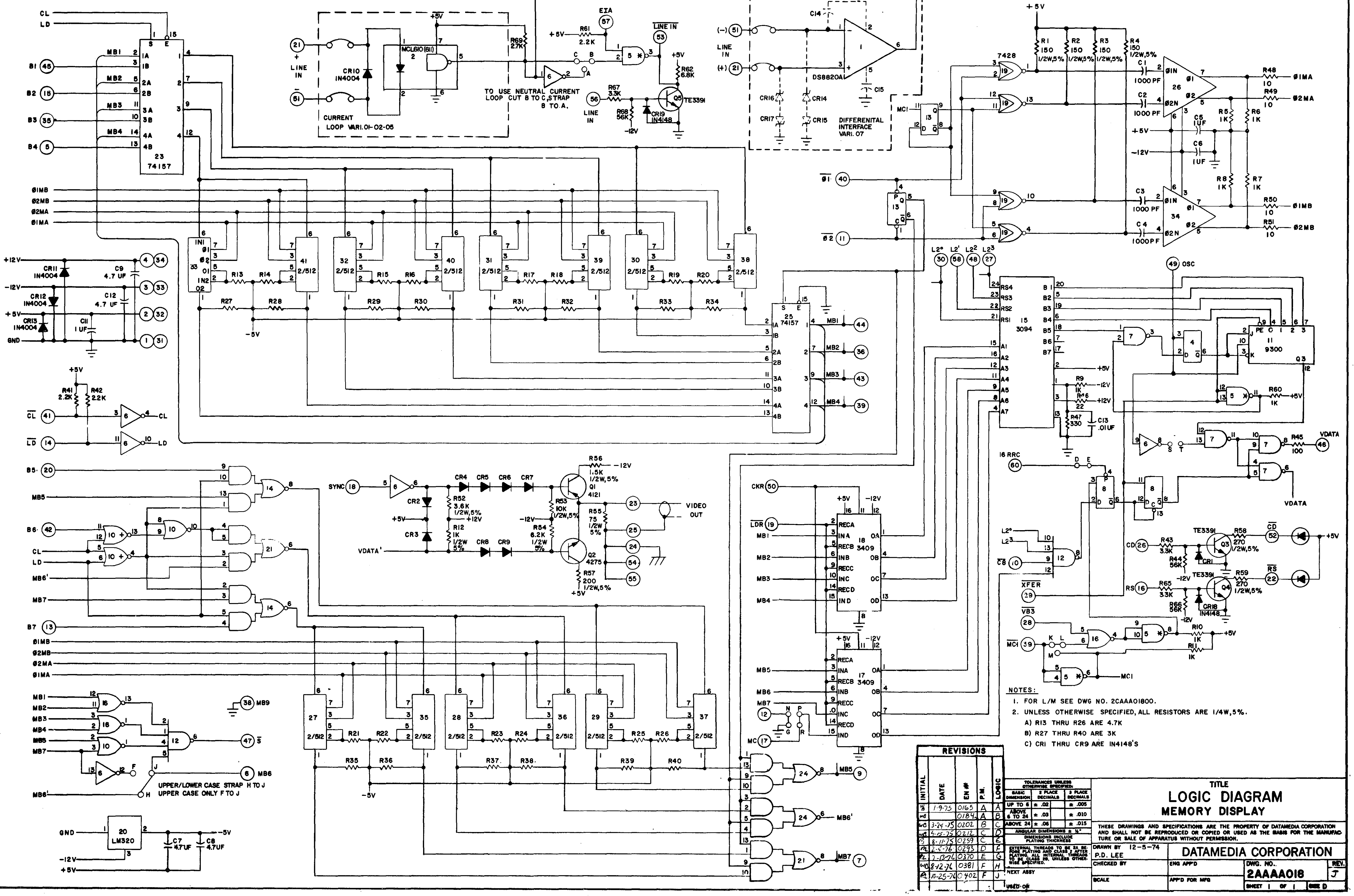
CL
LD
B1 (46)
B2 (15)
B3 (35)
B4 (5)
23 74157
LINE IN
CURRENT LOOP VARI.01-02-05
MCL610(611)
CR10 1N4004
TO USE NEUTRAL CURRENT LOOP CUT B TO C,STRAP B TO A.
EIA (57)
LINE IN (53)
R61 2.2K
R62 6.8K
R67 3.3K
R68 56K
R69 2.7K
CR19 IN4148
Q5 TE3391
DS8820A
DIFFERENITAL INTERFACE VARI. 07
CR14 CR15 CR16 CR17
C14 C15
+5V
-12V
7428
R1 150 R2 150 R3 150 R4 150 1/2W,5%
C1 1000 PF
C2 1000 PF
C3 1000 PF
C4 1000 PF
ØIN Ø2N Ø1 Ø2
R48 10 Ø1MA
R49 10 Ø2MA
R50 10 Ø1MB
R51 10 Ø2MB
R5 1K R6 1K R7 1K R8 1K
C5 1UF C6 1UF
MC1
Ø1 (40)
Ø2 (11)
Ø1MB Ø2MB Ø2MA Ø1MA
33 IN1 Ø1 Ø2 O1 IN2 O2
41 2/512
32 2/512
40 2/512
31 2/512
39 2/512
30 2/512
38 2/512
R13 R14 R15 R16 R17 R18 R19 R20
R27 R28 R29 R30 R31 R32 R33 R34
-5V
25 74157
MB1 (44)
MB2 (36)
MB3 (43)
MB4 (39)
+12V (4)(34)
-12V (3)(33)
+5V (2)(32)
GND (1)(31)
CR11 1N4004
CR12 1N4004
CR13 1N4004
C9 4.7 UF
C12 4.7 UF
C11 1 UF
R41 2.2K
R42 2.2K
CL (41)
LD (14)
L2° L2¹ L2² L2³
(30) (58) (48) (27)
49 OSC
15 3094
RS4 RS3 RS2 RS1
A1 A2 A3 A4 A5 A6 A7
B1 B2 B3 B4 B5 B6 B7
R9 1K
R46 22
R47 330
C13 .01UF
11 9300
PE C 1 2 3 J K Q3
R60 1K
R45 100
VDATA (46)
VDATA
16 RRC (60)
B5 (20)
MB5
B6 (42)
MB6'
MB7
B7 (13)
SYNC (18)
CR2 CR3 CR4 CR5 CR6 CR7 CR8 CR9
R52 3.6K 1/2W,5%
R12 1K 1/2W 5%
VDATA'
R53 10K 1/2W,5%
R54 8.2K 1/2W 5%
R55 75 1/2W 5%
R56 1.5K 1/2W,5%
R57 200 1/2W,5%
Q1 4121
Q2 4275
VIDEO OUT
(23) (25) (24) (54) (55)
CKR (50)
LDR (19)
18 3409
17 3409
RECA INA RECB INB RECC INC RECD IND
OA OB OC OD
MB7 (12)
MC (17)
MB5 (9)
MB6'
MB7 (7)
CD (26)
RS (16)
R43 3.3K
R44 56K
R65 3.3K
R66 56K
CR1 CR18 IN4148
Q3 TE3391
Q4 TE3391
R58 270 1/2W,5%
R59 270 1/2W,5%
CD (52)
RS (22)
C8 (10)
XFER (29)
VB3 (28)
MCI (39)
R10 1K
R11 1K
MCI
27 2/512
35 2/512
28 2/512
36 2/512
29 2/512
37 2/512
R21 R22 R23 R24 R25 R26
R35 R36 R37 R38 R39 R40
MB1 MB2 MB3 MB4 MB5 MB7
(47) S
(38) MB9
(6) MB6
UPPER/LOWER CASE STRAP H TO J
UPPER CASE ONLY F TO J
20 LM320
C7 4.7UF
C8 4.7UF
GND
-12V
+5V
-5V

NOTES:

1. FOR L/M SEE DWG NO. 2CAAA01800.
2. UNLESS OTHERWISE SPECIFIED, ALL RESISTORS ARE 1/4W,5%.
   A) R13 THRU R26 ARE 4.7K
   B) R27 THRU R40 ARE 3K
   C) CR1 THRU CR9 ARE IN4148'S

REVISIONS

INITIAL	DATE	EN #	P.M.	LOGIC
WB	1-9-75	0165	A	A
WB		0184	A	B
WB	3-24-75	0202	B	C
WB	4-15-75	0212	C	D
B	8-11-75	0259	C	E
M	2-5-76	0293	D	F
PL	7-13-76	0370	E	G
WB	8-12-76	0381	F	H
PL	10-25-76	0402	F	J

TOLERANCES UNLESS OTHERWISE SPECIFIED:

BASIC DIMENSION	2 PLACE DECIMALS	3 PLACE DECIMALS
UP TO 6	± .02	± .005
ABOVE 6 TO 24	± .03	± .010
ABOVE 24	± .06	± .015

ANGULAR DIMENSIONS ± ½°

DIMENSIONS INCLUDE PLATING THICKNESS

EXTERNAL THREADS TO BE 2A BEFORE PLATING AND CLASS 2 AFTER PLATING. ALL INTERNAL THREADS TO BE CLASS 2B, UNLESS OTHERWISE SPECIFIED.

NEXT ASSY

USED ON

TITLE

LOGIC DIAGRAM
MEMORY DISPLAY

THESE DRAWINGS AND SPECIFICATIONS ARE THE PROPERTY OF DATAMEDIA CORPORATION AND SHALL NOT BE REPRODUCED OR COPIED OR USED AS THE BASIS FOR THE MANUFACTURE OR SALE OF APPARATUS WITHOUT PERMISSION.

DRAWN BY 12-5-74
P.D. LEE

DATAMEDIA CORPORATION

CHECKED BY

ENG APP'D

DWG. NO. 2AAAA018

REV. J

SCALE

APP'D FOR MFG

SHEET 1 OF 1

SIZE D

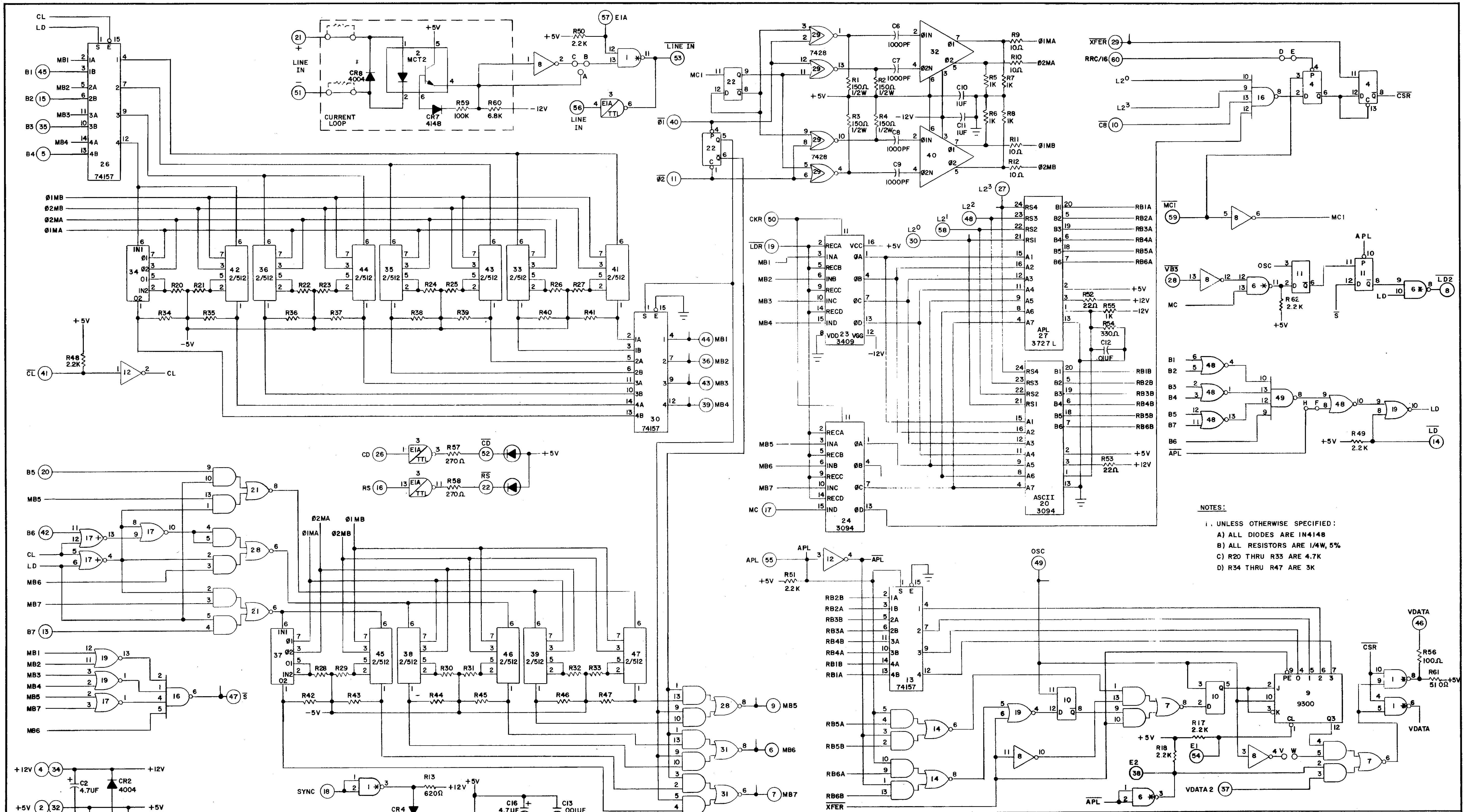
CL
LD
MB1
MB2
MB3
MB4
B1 45
B2 15
B3 35
B4 5
26 74157
LINE IN
CURRENT LOOP
CR8 4004
MCT2
CR7 4148
R59 100K
R60 6.8K
-12V
+5V
R50 2.2K
57 EIA
LINE IN 53
56 LINE IN
EIA TTL
Ø1MB
Ø2MB
Ø2MA
Ø1MA
34 IN1
42 2/512
36 2/512
44 2/512
35 2/512
43 2/512
33 2/512
41 2/512
R20 R21 R22 R23 R24 R25 R26 R27
R34 R35 R36 R37 R38 R39 R40 R41
-5V
30 74157
44 MB1
36 MB2
43 MB3
39 MB4
R48 2.2K
CL 41
CD 26
RS 16
R57 270Ω
R58 270Ω
CD 52
RS 22
B5 20
MB5
B6 42
MB6
MB7
B7 13
17
21
28
19
16
47 S
Ø2MA Ø1MB Ø1MA Ø2MB
37 IN1
45 2/512
38 2/512
46 2/512
39 2/512
47 2/512
R28 R29 R30 R31 R32 R33
R42 R43 R44 R45 R46 R47
28 9 MB5
31 6 MB6
31 7 MB7
+12V 4 34
+5V 2 32
GND 1 31
-12V 3 33
C2 4.7UF
CR2 4004
C1 1UF
CR1 4004
C3 4.7UF
CR3 4004
25 LM320
C4 4.7UF
C5 4.7UF
SYNC 18
R13 620Ω
Q1 1N4275
CR4 4148
VDATA'
CR5 4148
R14 1K
CR6 4148
R15 1K
R19 47Ω
R16
C14 .001UF
C15 4.7UF
C16 4.7UF
C13 .001UF
23 25 24
VIDEO OUT
MC1
22
Ø1 40
Ø2 11
29 7428
C6 1000PF
C7 1000PF
C8 1000PF
C9 1000PF
R1 150Ω 1/2W
R2 150Ω 1/2W
R3 150Ω 1/2W
R4 150Ω 1/2W
C10 1UF
C11 1UF
32
40
R5 1K R6 1K R7 1K R8 1K
R9 10Ω Ø1MA
R10 10Ω Ø2MA
R11 10Ω Ø1MB
R12 10Ω Ø2MB
CKR 50
LDR 19
MB1 MB2 MB3 MB4
L2⁰ 30
L2¹ 58
L2² 48
L2³ 27
23 3409
APL 27 3727L
RB1A RB2A RB3A RB4A RB5A RB6A
RB1B RB2B RB3B RB4B RB5B RB6B
R52 22Ω
R55 1K
R54 330Ω
C12 .01UF
R53 22Ω
24 3094
ASCII 20 3094
MB5 MB6 MB7
MC 17
XFER 29
RRC/16 60
C8 10
16
4
CSR
MC1 59
MC1
VB3 28
OSC
R62 2.2K
LD2 8
B1 B2 B3 B4 B5 B7 B6 APL
48
49
R49 2.2K
LD 14
LD
APL 55
R51 2.2K
13 74157
RB2B RB2A RB3B RB3A RB4B RB4A RB1B RB1A
OSC 49
VDATA 46
R56 100Ω
R61 510Ω
9 9300
PE 0 1 2 3
Q3
R17 2.2K
R18 2.2K
E1 54
E2 38
RB5A RB5B RB6A RB6B XFER
VDATA 2 37
APL
VDATA

NOTES:

i. UNLESS OTHERWISE SPECIFIED:

A) ALL DIODES ARE IN4148

B) ALL RESISTORS ARE 1/4W, 5%

C) R20 THRU R33 ARE 4.7K

D) R34 THRU R47 ARE 3K

REVISIONS							
INITIAL	DATE	EN #	BD. DETAIL	P.M.	L.M.	BD. ASS'Y	LOGIC
	3-31-75	0203	A	A	A	A	A
WB	3-15-75	0268	B	B	B	B	B
RL	1-8-76	0294	B	C	B	B	C
RL	2-6-76	0309	B	C	C	C	D
RL	3-12-76	0328	B	C	D	D	E

TOLERANCES UNLESS OTHERWISE SPECIFIED:

BASIC DIMENSION	2 PLACE DECIMALS	3 PLACE DECIMALS
UP TO 6	± [illegible]	± .005
ABOVE 6 TO 24	± [illegible]	± .010
ABOVE 24	± [illegible]	± .015

ANGULAR DIMENSIONS ± ½°

DIMENSIONS INCLUDE PLATING THICKNESS

EXTERNAL THREADS TO BE 2A BEFORE PLATING AND CLASS 2 AFTER PLATING. ALL INTERNAL THREADS TO BE CLASS 2B, UNLESS OTHERWISE SPECIFIED.

NEXT ASSY

USED ON

TITLE
LOGIC DIAGRAM
APL MEMORY DISPLAY

THESE DRAWINGS AND SPECIFICATIONS ARE THE PROPERTY OF DATAMEDIA CORPORATION AND SHALL NOT BE REPRODUCED OR COPIED OR USED AS THE BASIS FOR THE MANUFACTURE OR SALE OF APPARATUS WITHOUT PERMISSION.

DRAWN BY RM SNOWDEN

DATAMEDIA CORPORATION

CHECKED BY

ENG APP'D

DWG. NO. 2AAAA023

REV. E

SCALE

APP'D FOR MFG

SHEET 1 OF 1

SIZE D

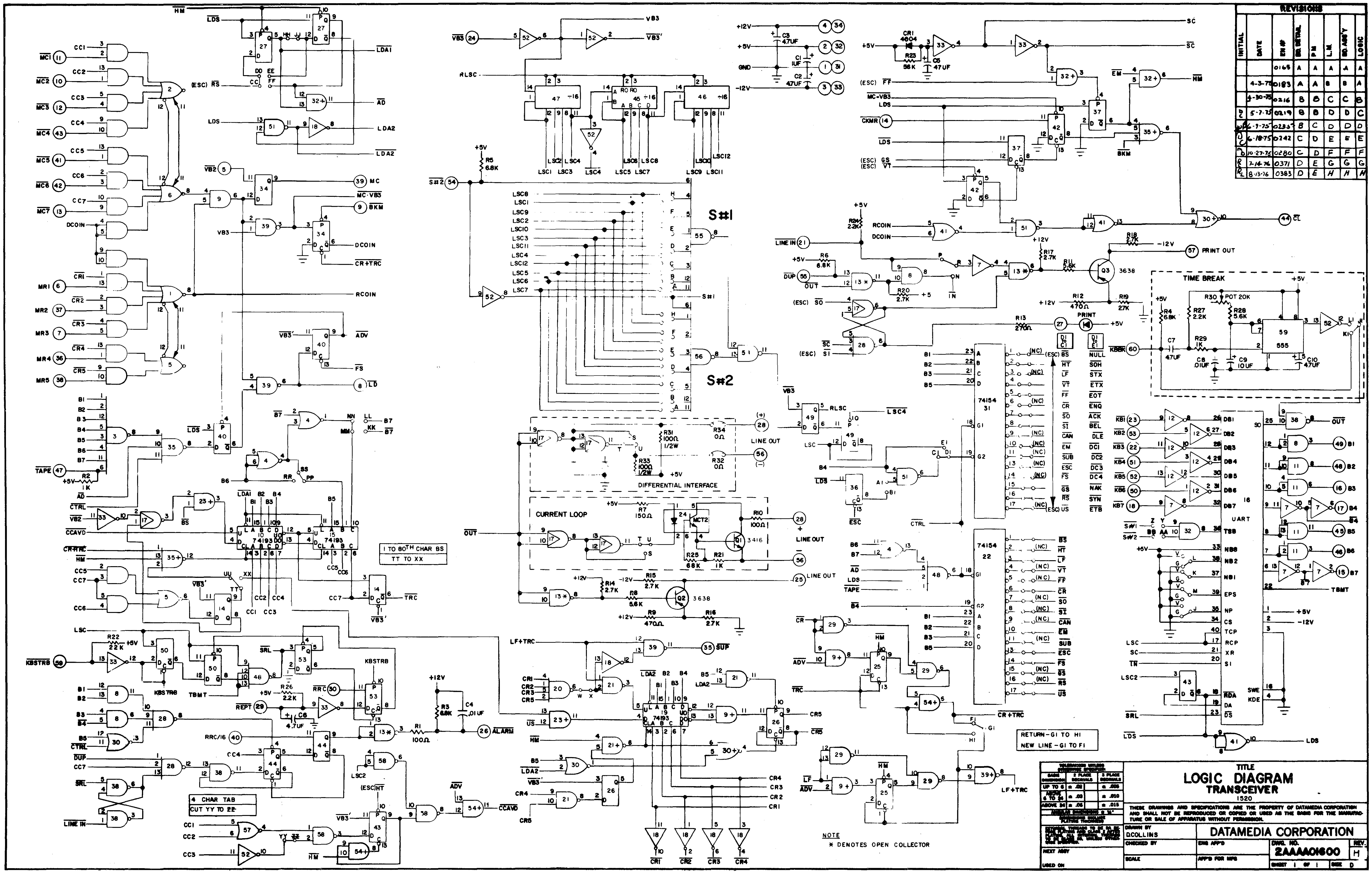
S#1
S#2
DIFFERENTIAL INTERFACE
CURRENT LOOP
TIME BREAK
1 TO 80TH CHAR BS
TT TO XX
4 CHAR TAB
CUT YY TO ZZ
RETURN-G1 TO H1
NEW LINE-G1 TO F1
PRINT OUT
LINE OUT
ALARM
UART

NOTE
* DENOTES OPEN COLLECTOR

REVISIONS

INITIAL	DATE	EN #	BD. DETAIL	P.M.	L.M.	BD. ASS'Y	LOGIC
		0165	A	A	A	A	A
	4-3-75	0183	A	A	B	B	A
	4-30-75	0216	B	B	C	C	B
DC	5-7-75	0219	B	B	D	D	C
WP	6-7-75	0235	B	C	D	D	D
DC	6-18-75	0242	C	D	E	E	E
MD	10-27-75	0280	C	D	F	F	F
RL	7-14-76	0371	D	E	G	G	G
RL	8-13-76	0383	D	E	H	H	H

TOLERANCES UNLESS OTHERWISE SPECIFIED:

BASIC DIMENSION	2 PLACE DECIMALS	3 PLACE DECIMALS
UP TO 6	± .02	± .005
ABOVE 6 TO 24	± .03	± .010
ABOVE 24	± .06	± .015

ANGULAR DIMENSIONS ± ½°
DIMENSIONS INCLUDE PLATING THICKNESS
EXTERNAL THREADS TO BE 2A BEFORE PLATING AND CLASS 3 AFTER PLATING. ALL INTERNAL THREADS TO BE CLASS 2B, UNLESS OTHERWISE SPECIFIED.
NEXT ASSY
USED ON

TITLE
LOGIC DIAGRAM
TRANSCEIVER
1520

THESE DRAWINGS AND SPECIFICATIONS ARE THE PROPERTY OF DATAMEDIA CORPORATION AND SHALL NOT BE REPRODUCED OR COPIED OR USED AS THE BASIS FOR THE MANUFACTURE OR SALE OF APPARATUS WITHOUT PERMISSION.

DRAWN BY D.COLLINS
CHECKED BY
SCALE
DATAMEDIA CORPORATION
ENG APP'D
APP'D FOR MFG
DWG. NO. 2AAAA01600
REV. H
SHEET 1 OF 1
SIZE D

TABLE "A"			
COMP.	VALUE		
	6 AMP		3 AMP
R15	.51Ω, 5W		1.0Ω, 5W
R16	↑		1.0Ω, 5W
R17			NOT USED
R18			NOT USED
R19	↓		NOT USED
R21	.51Ω, 5W		NOT USED
R22	100Ω, ½W		JUMPER
F2	10 AMP		5 AMP
C12	32,000UF		21,000UF
C15	NOT USED		11,000UF
T1	035FMC1012		035FMC1011
			035FMC1010
Q1	2N3055		NOT USED
Q4	2N3055		NOT USED

FOR 3 AMP VAR., USE EITHER 21,000 UF OR 11,000UF

FOR 3 AMP VAR., USE EITHER 1010 OR 1011.

NOTES:
1. FOR L/M, SEE DWG # 7CAAA0101 THRU 03.
2. FOR 3 AMP VARIATION, SEE TABLE "A".

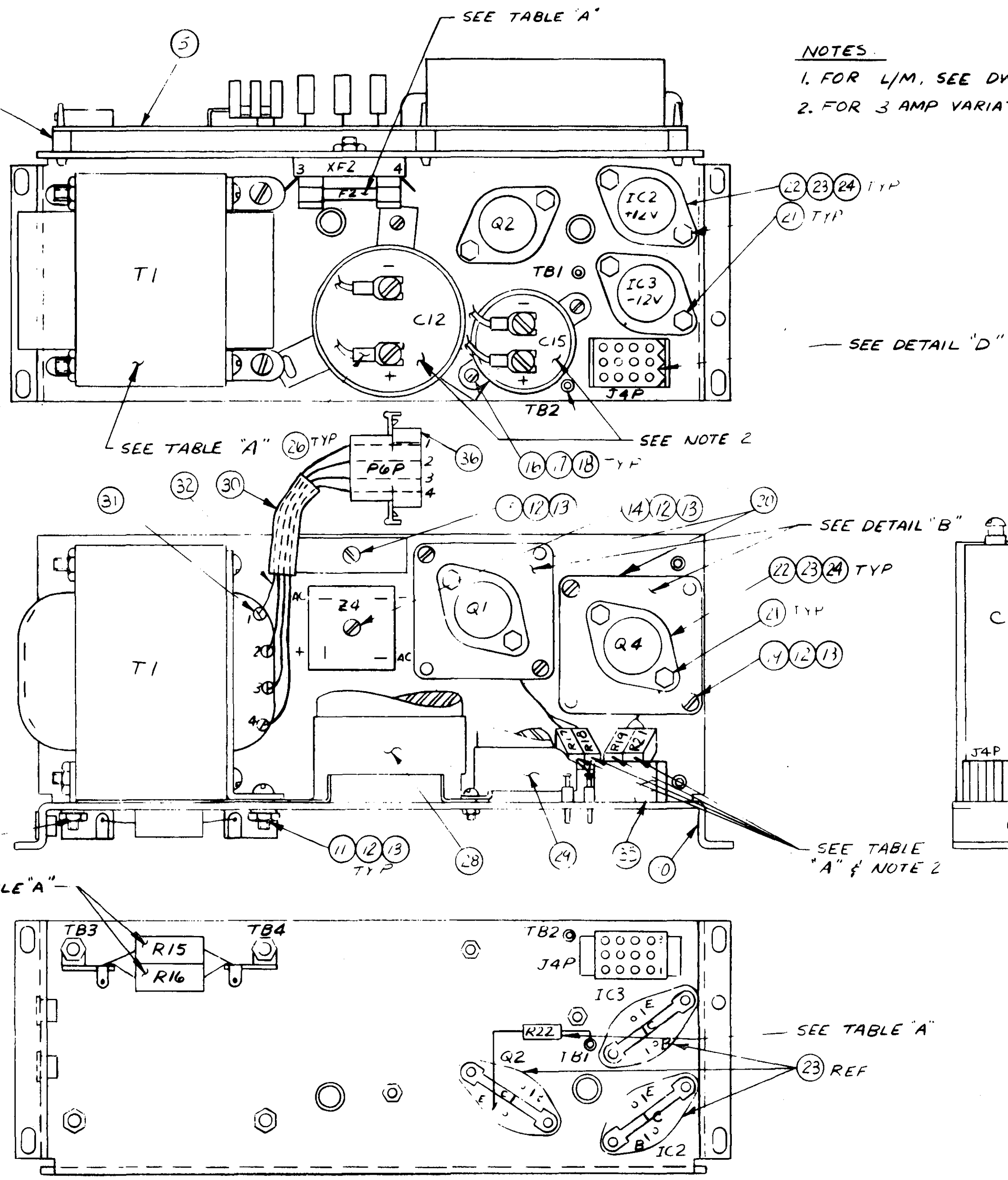

SEE TABLE "A"
③
㉕ TYP.
3 XF2 4
F2
Q2
IC2 +12V
IC3 -12V
㉒㉓㉔ TYP
㉑ TYP
TB1
T1
C12
C15
TB2
J4P
SEE DETAIL "D"
SEE TABLE "A"
㉖ TYP
P6P
1 2 3 4
㊱
⑯⑰⑱ TYP
SEE NOTE 2
㉛ ㉜ ㉚
⑪⑫⑬
⑭⑫⑬
⑳
SEE DETAIL "B"
Z4
AC
Q1
Q4
㉒㉓㉔ TYP
㉑ TYP
⑭⑫⑬
R21 R19 R17
⑪⑫⑬ TYP
⑪⑫⑬ TYP
㉘ ㉙ ㉟ ⑩
SEE TABLE "A" & NOTE 2
SEE TABLE "A"
TB3 TB4
R15
R16
TB2
J4P
IC3
R22
Q2
TB1
SEE TABLE "A"
㉓ REF
IC2

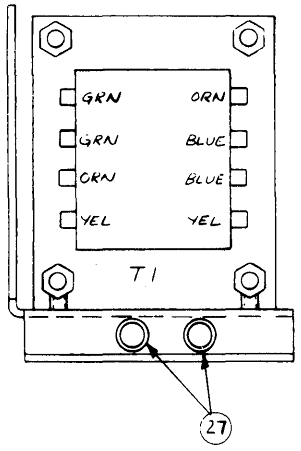

GRN
GRN
ORN
YEL
ORN
BLUE
BLUE
YEL
T1
㉗

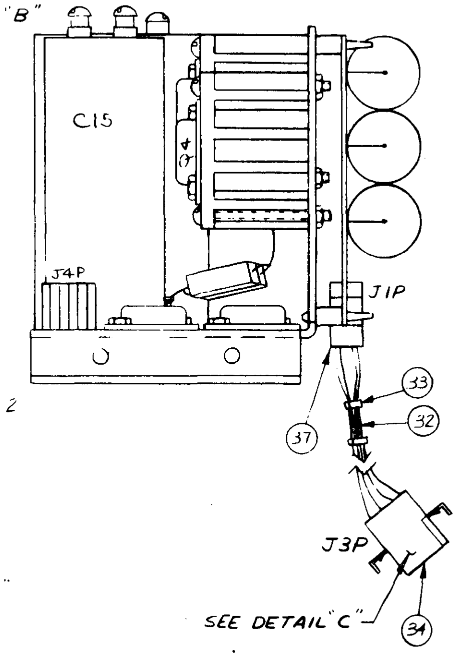

C15
J4P
J1P
㉝
㉜
㊲
J3P
SEE DETAIL "C"
㉞

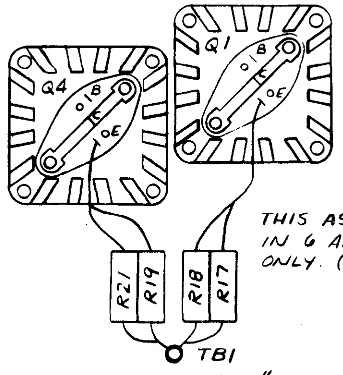

Q4
Q1
B
E
R21
R19
R18
R17
TB1

THIS ASS'Y USED IN 6 AMP VAR. ONLY. (SEE NOTE 2)

DETAIL "B"
REAR VIEW

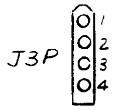

TO BE USED ONLY WHEN +15VDC IS REQ'D

DETAIL "C"

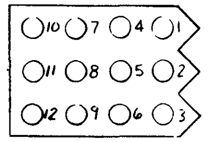

10 7 4 1
11 8 5 2
12 9 6 3

DETAIL "D"
TOP VIEW

WIRE TABLE									
WIRE NO.	FROM	TO	AWG	LTG	WIRE NO.	FROM	TO	AWG	LTG
1	T1-BLUE	Z4-AC	18		42	J3P-1	J1P-21	22	+15VDC ONLY
2	T1-BLUE	Z4-AC	18		43				
3	Z4 "+"	C15 "+"	18		44	J3P-2	J1P-22	22	
4	Z4 "-"	C15 "-"	18		45	J3P-3	J1P-4	22	
5	C15 "-"	J4P-10	18		46	J3P-4	J1P-32	22	
6	J4P-10	IC3-3	22						
7	IC3-3	J1P-26	22						
8	J4P-10	J4P-11	22		49	Q4-E	TB1 SEE DETAIL "B"		6 AMP
9	J4P-11	J4P-12	22		50	Q1-E	TB1		
10	J4P-12	TB2	18		51	Q2-E	Q4-B	22	
11	TB2	J1P-11	22		52	Q4-B	Q1-B	22	
12	TB2	J1P-7	22		53	F2-4	Q4-C	18	
13	TB2	J1P-45	22		54	Q4-C	Q1-C	18	
14	C15 "+"	F2-3	18		55	C12 "+"	Z4 "+" SEE TABLE "A"	18	
15	F2-4	Q2-C	18		56	C12 "-"	Z4 "-"	18	
16	Q2-C	J1P-46	22						
17	Q2-E	TB1 (SEE TABLE "A")	22						
18	TB1	TB4	18		59				
19	TB1	J1P-38	22		60				
20	Q2-B	J1P-41	22						
21	TB3	J4P-9	18						
22	J4P-9	J4P-8	18						
23	J4P-8	J4P-7	18						
24	J4P-7	J1P-30	22						
25	J4P-4	J4P-5	22						
26	J4P-5	J1P-31	22						
27	J4P-1	J4P-2	22						
28	J4P-2	IC2-3	22						
29	IC2-3	J1P-24	22						
30	T1-ORG	J1P-5	18						
31	T1-ORG	J1P-6	18						
32	T1-GRN	J1P-9	18						
33	T1-GRN	J1P-10	18						
34	T1-YEL	J1P-12	18						
35	T1-YEL	J1P-13	18						
36	IC2-2	J1P-23	22						
37	IC2-1	J1P-8	22						
38	IC3-2	J1P-25	22						
39	IC3-1	J1P-14	22						
40			22						
41									

3 AMP (wires 1–39)

AC WIRING				
WIRE NO.	FROM	TO	AWG	LTG
1	T1-1	P6P-1	18	
2	T1-2	P6P-2	18	
3	T1-3	P6P-3	18	
4	T1-4	P6P-4	18	
5	T1 SHLD	J4P-6		

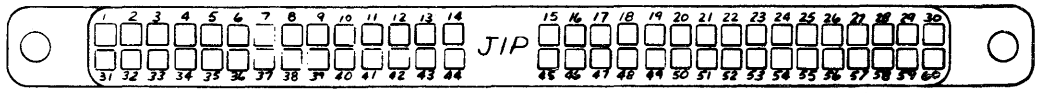

J1P
1 2 3 4 5 6 7 8 9 10 11 12 13 14
15 16 17 18 19 20 21 22 23 24 25 26 27 28 29 30
31 32 33 34 35 36 37 38 39 40 41 42 43 44
45 46 47 48 49 50 51 52 53 54 55 56 57 58 59 60

REVISIONS
A RELEASE PER EN 0071 3-20-74 WLB
B. REVISED PER EN#0181 PDL 2-3-75
C. REVISED PER EN#0185 PDL 2-6-75

TOLERANCES UNLESS OTHERWISE SPECIFIED:

BASIC DIMENSION	2 PLACE DECIMALS		3 PLACE DECIMALS
UP TO 6	± .02		± .005
ABOVE 6 TO 24	± .03		± .010
ABOVE 24	± .05		± .015

ANGULAR DIMENSIONS ± ½°
DIMENSIONS INCLUDE PLATING THICKNESS
EXTERNAL THREADS TO BE 2A BEFORE PLATING AND CLASS 2 AFTER PLATING. ALL INTERNAL THREADS TO BE CLASS 2B, UNLESS OTHERWISE SPECIFIED.
NEXT ASSY
USED ON PWR SUPPLY

TITLE
WIRING DIAGRAM
POWER SUPPLY CHASSIS
6 & 3 AMP

THESE DRAWINGS AND SPECIFICATIONS ARE THE PROPERTY OF DATAMEDIA CORPORATION AND SHALL NOT BE REPRODUCED OR COPIED OR USED AS THE BASIS FOR THE MANUFACTURE OR SALE OF APPARATUS WITHOUT PERMISSION.

DRAWN BY 2-6-74 P. D. LEE
CHECKED BY 3-20-74
ENG APP'D 3-20-74
SCALE NONE
APP'D FOR MFG
DATAMEDIA CORPORATION
DWG. NO. 482CPA0200
REV. D
SHEET 1 OF 1
SIZE D

TABLE "A"			
COMP.	VALUE		
	6 AMP		3 AMP
R9	33Ω, ½W		51Ω, ½W
R10	80.6Ω, ¼W, 1%		121Ω, ¼W, 1%

REVISIONS
A. RELEASE PER EN0071 3-20-74 WLB
B. PER EN 0107 WLB 8-24-74
C PER EN 0181 WB 2-4-75
D PER EN# 0262 DC 8-13-75
E PER EN 0380 8-11-76 WB
F PER EN 0387 RL 8-30-76

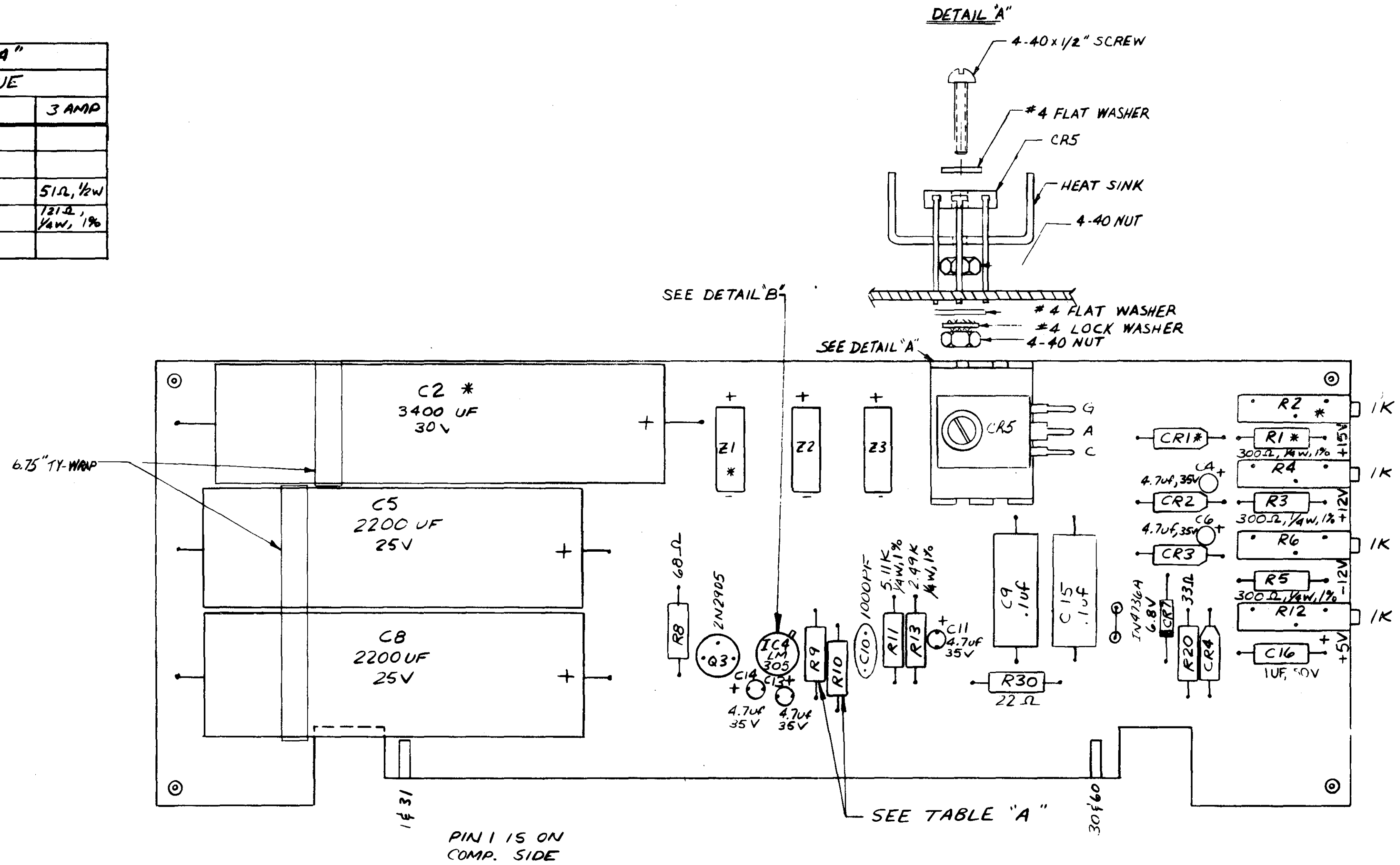

DETAIL "A"
4-40 x 1/2" SCREW
#4 FLAT WASHER
CR5
HEAT SINK
4-40 NUT
#4 FLAT WASHER
#4 LOCK WASHER
4-40 NUT
SEE DETAIL "B"
SEE DETAIL "A"
6.75" TY-WRAP
C2 *
3400 UF
30 V
C5
2200 UF
25V
C8
2200 UF
25V
Z1 *
Z2
Z3
CR5
G
A
C
R2 *
1K
CR1 *
R1 *
300Ω, ¼W, 1%
+15V
R4
1K
C4
4.7uf, 35V
CR2
R3
300Ω, ¼W, 1%
+12V
C6
4.7uf, 35V
R6
1K
CR3
R5
300Ω, ¼W, 1%
-12V
R12
1K
C16
1UF, 50V
+5V
R8
68Ω
2N2905
Q3
IC4
LM 305
C14
4.7uf 35V
C13
4.7uf 36V
R9
R10
C10
1000PF
R11
5.11K ¼W, 1%
R13
2.49K ¼W, 1%
C11
4.7uf 35V
C9 .1uf
C15 .1uf
R30
22Ω
1N4736A 6.8V
CR7
R20
33Ω
CR4
1 & 31
30 & 60
SEE TABLE "A"
PIN 1 IS ON COMP. SIDE

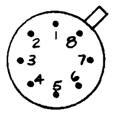

DETAIL "B"
TOP VIEW

NOTES:

1. FOR L/M SEE DWG NO. 182EPA0200
2. Z1, Z2 & Z3 ARE F903B-20 BRIDGE RECTIFIERS.
3. CR1 THRU CR4 ARE 3A, 50V DIODES.
4. UNLESS OTHERWISE SPECIFIED, ALL RESISTORS ARE 1/2 W.
5. * PARTS NOT NEEDED WHEN +15V IS NOT USED

TOLERANCES UNLESS OTHERWISE SPECIFIED		
BASIC DIMENSION	2 PLACE DECIMALS	3 PLACE DECIMALS
UP TO 6	± .02	± .005
ABOVE 6 TO 24	± .03	± .010
ABOVE 24	± .06	± .015
ANGULAR DIMENSIONS ± ½°		
DIMENSIONS INCLUDE PLATING THICKNESS		

EXTERNAL THREADS TO BE 2A BEFORE PLATING AND CLASS 3 AFTER PLATING. ALL INTERNAL THREADS TO BE CLASS 2B, UNLESS OTHERWISE SPECIFIED.

NEXT ASSY

USED ON

TITLE
BOARD ASS'Y
110/125 & 220/250 VAC
6 & 3 AMP PWR SUPPLY

THESE DRAWINGS AND SPECIFICATIONS ARE THE PROPERTY OF DATAMEDIA CORPORATION AND SHALL NOT BE REPRODUCED OR COPIED OR USED AS THE BASIS FOR THE MANUFACTURE OR SALE OF APPARATUS WITHOUT PERMISSION.

DRAWN BY P.D. LEE 2-8-74

DATAMEDIA CORPORATION

CHECKED BY 3-20-74

ENG. APPD 3-20-74

DWG. NO. 482FPA02

REV. F

SCALE 2:1

APP'D FOR MFG

SHEET 1 OF 1

SIZE D

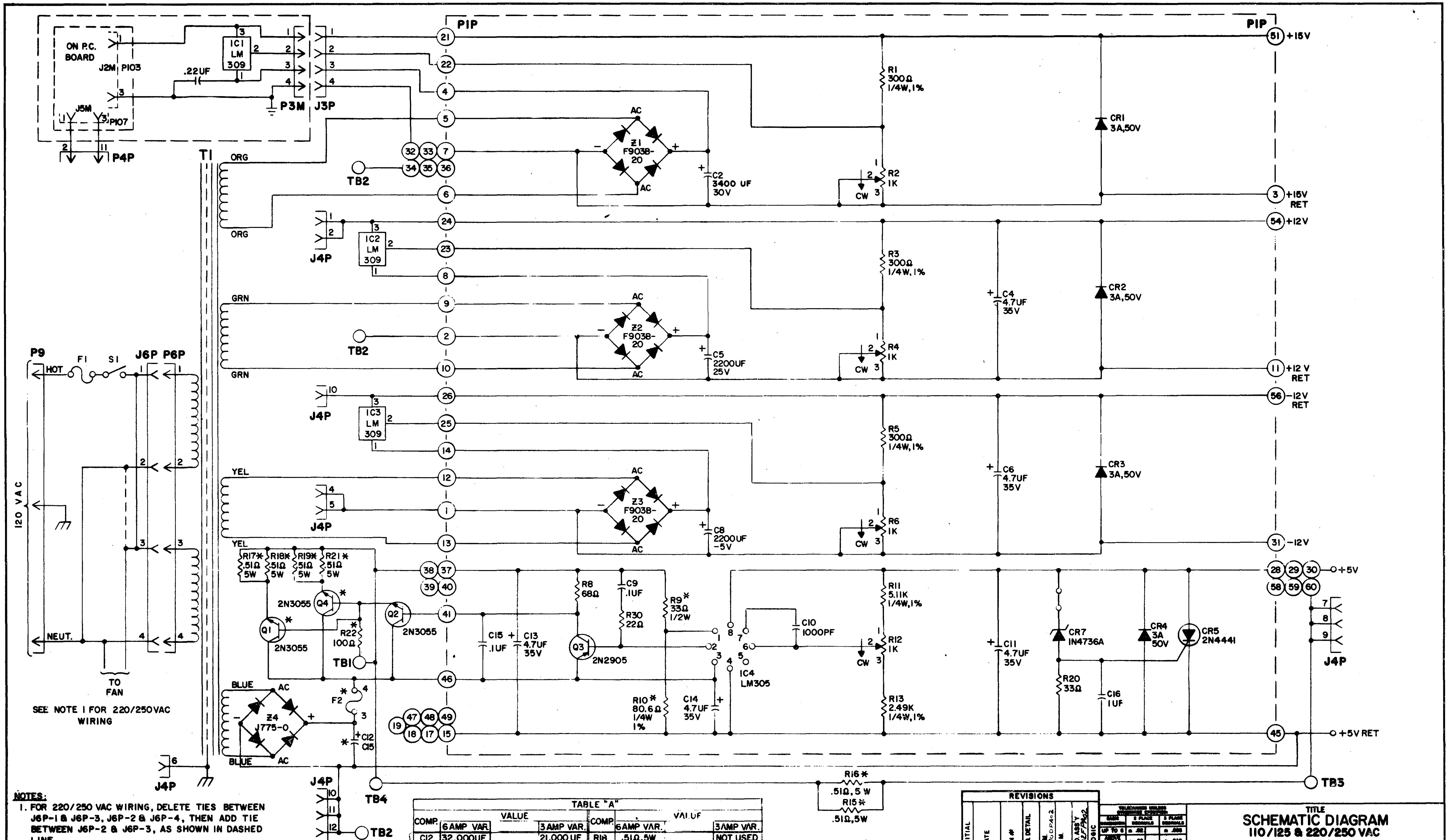
ON P.C. BOARD
J2M P103
IC1 LM 309
.22UF
J5M P107
P3M J3P
P4P
P1P
T1
ORG
GRN
YEL
BLUE
TB2
TB1
TB3
TB4
J4P
Z1 F903B-20
Z2 F903B-20
Z3 F903B-20
Z4 1775-0
AC
C2 3400 UF 30V
C5 2200UF 25V
C8 2200UF -5V
IC2 LM 309
IC3 LM 309
R1 300Ω 1/4W,1%
R2 1K
R3 300Ω 1/4W,1%
R4 1K
R5 300Ω 1/4W,1%
R6 1K
CW
CR1 3A,50V
CR2 3A,50V
CR3 3A,50V
C4 4.7UF 35V
C6 4.7UF 35V
+15V
+15V RET
+12V
+12 V RET
-12V RET
-12V
+5V
+5V RET
P9
HOT
F1
S1
J6P P6P
120 VAC
NEUT.
TO FAN
SEE NOTE 1 FOR 220/250VAC WIRING
R17* .51Ω 5W
R18* .51Ω 5W
R19* .51Ω 5W
R21* .51Ω 5W
2N3055 Q4
Q2 2N3055
Q1 2N3055
R22* 100Ω
F2
C12 C15
R8 68Ω
C9 .1UF
R30 22Ω
R9* 33Ω 1/2W
C15 .1UF
C13 4.7UF 35V
Q3 2N2905
R10* 80.6Ω 1/4W 1%
C14 4.7UF 35V
C10 1000PF
IC4 LM305
R11 5.11K 1/4W,1%
R12 1K
R13 2.49K 1/4W,1%
C11 4.7UF 35V
CR7 1N4736A
R20 33Ω
C16 1UF
CR4 3A 50V
CR5 2N4441
R16* .51Ω, 5 W
R15* .51Ω,5W

FOR 3 AMP USE EITHER C12 OR C15

NOTES:
1. FOR 220/250 VAC WIRING, DELETE TIES BETWEEN J6P-1 & J6P-3, J6P-2 & J6P-4, THEN ADD TIE BETWEEN J6P-2 & J6P-3, AS SHOWN IN DASHED LINE.
2. UNLESS OTHERWISE SPECIFIED, ALL RESISTORS ARE 1/2 W.
3. *- SEE TABLE "A".

TABLE "A"

COMP.	VALUE 6AMP VAR.	VALUE 3AMP VAR.	COMP.	VALUE 6AMP VAR.	VALUE 3AMP VAR.
C12	32,000UF	21,000 UF	R18	.51Ω,5W	NOT USED
C15		11,000 UF	R19	.51Ω,5W	NOT USED
F2	10 AMP	5 AMP	R21	.51Ω,5W	NOT USED
R9	33Ω,1/2W	51Ω,1/2W	R22	100Ω, 5W	0Ω
R10	80.6Ω,1%	121Ω, 1%	Q1	2N3055	NOT USED
R15	.51Ω, 5W	1.0Ω,5W			
R16	.51Ω, 5W	1.0Ω,5W	Q4	2N3055	NOT USED
R17	.51Ω, 5W	NOT USED			

REVISIONS

INITIAL	DATE	EN #	BD. DETAIL	P.M. 380DPA02	L.M.	BD. ASS'Y 382FPA02	LOGIC
WB	3/29/74	0071	A	A	A	A	A
WB	7/11/74	0099	A	A	B	A	A
WB	8/13/74	0107	B	B	C	B	B
WB	2/4/75	0181	B	B	0162 E	C	C
WB	11-23-76	0412		D			G
RL	8-30-76	0387	C	C	H	F	F
	8-11-76	0389	C	C	G	E	E
DC	3-17-75	0262	C	C	F	D	D

TOLERANCES UNLESS OTHERWISE SPECIFIED

BASIC DIMENSION	2 PLACE DECIMALS	3 PLACE DECIMALS
UP TO 6	± .02	± .005
ABOVE 6 TO 24	± .03	± .010
ABOVE 24	± .06	± .015

NEXT ASSY
USED ON

TITLE
SCHEMATIC DIAGRAM
110/125 & 220/250 VAC
6.3 AMP

THESE DRAWINGS AND SPECIFICATIONS ARE THE PROPERTY OF DATAMEDIA CORPORATION AND SHALL NOT BE REPRODUCED OR COPIED OR USED AS THE BASIS FOR THE MANUFACTURE OR SALE OF APPARATUS WITHOUT PERMISSION.

DRAWN BY 2-8-74
P.D. LEE
CHECKED BY 3-20-74
ENG APP'D 3-20-74
SCALE
APP'D FOR MFG

DATAMEDIA CORPORATION
DWG. NO. 482APA0200
REV. G
SHEET 1 OF 1
SIZE D

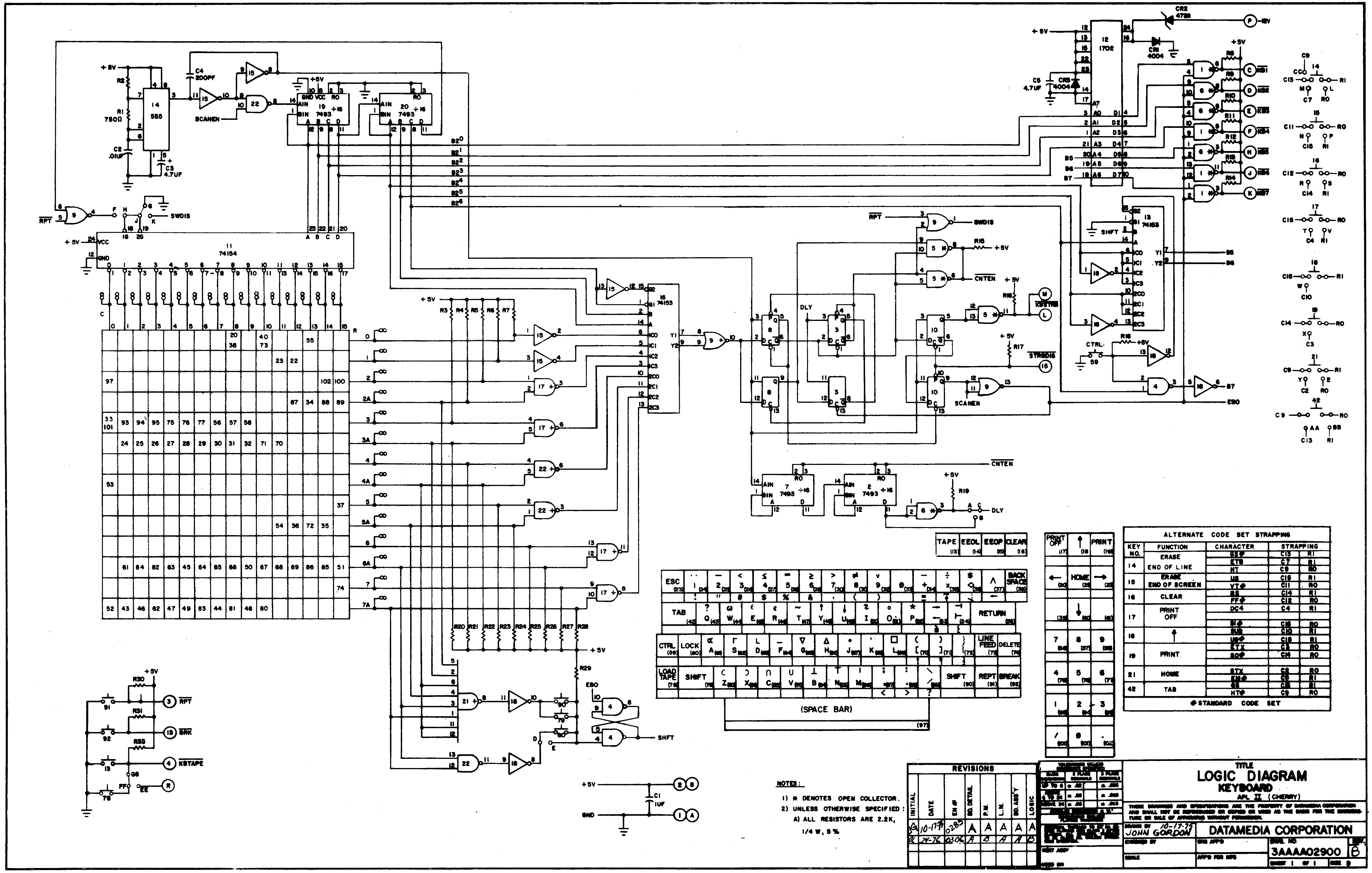
555
74154
7493
74153
1702
CR2 4728
CR1 4004
CR3 4004
C4 200PF
C2 .01UF
C3 4.7UF
C5 4.7UF
R1 750Ω
+5V
-12V
SCANEN
SWDIS
RPT
SHIFT
CTRL
STRBDIS
CNTEN
DLY
KBSTRB
KBTAPE
BRK
SHFT
EBO
B5
B6
B7
KB1
KB2
KB3
KB4
KB5
KB6
KB7
ESC
TAB
CTRL
LOCK
LOAD TAPE
SHIFT
RETURN
BACK SPACE
LINE FEED
DELETE
REPT
BREAK
(SPACE BAR)
TAPE
EEOL
EEOP
CLEAR
PRINT OFF
PRINT
HOME
GND

ALTERNATE CODE SET STRAPPING				
KEY NO.	FUNCTION	CHARACTER	STRAPPING	
14	ERASE END OF LINE	GS#	C13	RI
		ETB	C7	RI
		HT	C9	RO
15	ERASE END OF SCREEN	US	C15	RI
		VT#	C11	RO
16	CLEAR	RS	C14	RI
		FF#	C12	RO
17	PRINT OFF	DC4	C4	RI
		SI#	C16	RO
18	↑	SUB	C10	RI
		US#	C15	RI
19	PRINT	ETX	C3	RO
		SO#	C16	RO
21	HOME	STX	C2	RO
		EM#	C9	RI
42	TAB	GS	C13	RI
		HT#	C9	RO

STANDARD CODE SET

NOTES:

1) * DENOTES OPEN COLLECTOR.

2) UNLESS OTHERWISE SPECIFIED:

A) ALL RESISTORS ARE 2.2K, 1/4 W, 5 %

REVISIONS							
INITIAL	DATE	EN #	BD. DETAIL	P.M.	L.M.	BD. ASS'Y	LOGIC
JG	10-17-75	0285	A	A	A	A	A
JL	24-76	0306	A	B	A	A	B

TITLE

LOGIC DIAGRAM

KEYBOARD

APL II (CHERRY)

THESE DRAWINGS AND SPECIFICATIONS ARE THE PROPERTY OF DATAMEDIA CORPORATION AND SHALL NOT BE REPRODUCED OR COPIED OR USED AS THE BASIS FOR THE MANUFACTURE OR SALE OF APPARATUS WITHOUT PERMISSION.

DRAWN BY 10-17-75 JOHN GORDON

CHECKED BY

ENG APP'D

SCALE

APP'D FOR MFG

DATAMEDIA CORPORATION

DWG. NO. 3AAAA02900 REV. B

SHEET 1 OF 1 SIZE D

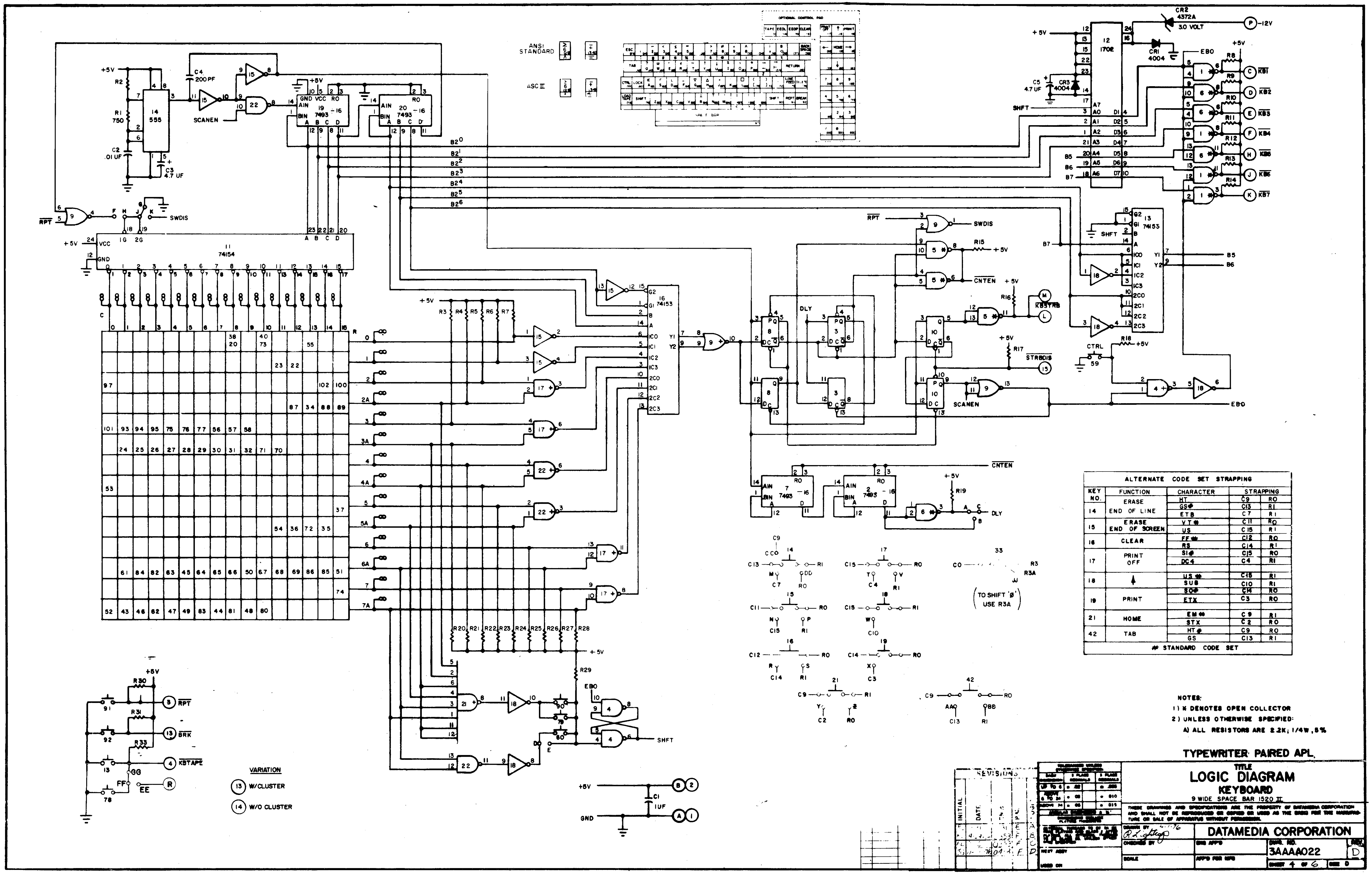
ANSI STANDARD
ASC II
OPTIONAL CONTROL PAD
14 555
15
22
19 ÷16 7493
20 ÷16 7493
11 74154
16 74153
13 74153
12 1702
CR2 4372A 3.0 VOLT
CR1 4004
CR3 4004
C4 200PF
C2 .01 UF
C3 4.7 UF
C5 4.7 UF
R1 750
SCANEN
RPT
SWDIS
CNTEN
KBSTRB
STRBDIS
DLY
SHFT
EBO
CTRL
B2⁰
B2¹
B2²
B2³
B2⁴
B2⁵
B2⁶
B5
B6
B7
KB1
KB2
KB3
KB4
KB5
KB6
KB7
+5V
-12V
GND
BRK
KBTAPE
7 ÷16 7493
2 ÷16 7493
TO SHIFT 'Ø' USE R3A
C1 1UF

VARIATION

⑬ W/CLUSTER

⑭ W/O CLUSTER

ALTERNATE CODE SET STRAPPING				
KEY NO.	FUNCTION	CHARACTER	STRAPPING	
14	ERASE END OF LINE	HT	C9	RO
		GS#	C13	RI
		ETB	C7	RI
15	ERASE END OF SCREEN	VT#	C11	RO
		US	C15	RI
16	CLEAR	FF#	C12	RO
		RS	C14	RI
17	PRINT OFF	SI#	C15	RO
		DC4	C4	RI
18	▲	US#	C15	RI
		SUB	C10	RI
19	PRINT	SO#	C14	RO
		ETX	C3	RO
21	HOME	EM#	C9	RI
		STX	C2	RO
42	TAB	HT#	C9	RO
		GS	C13	RI
# STANDARD CODE SET				

NOTES:

1) ✱ DENOTES OPEN COLLECTOR

2) UNLESS OTHERWISE SPECIFIED:

A) ALL RESISTORS ARE 2.2K; 1/4W, 5%

TYPEWRITER PAIRED APL.

REVISIONS

INITIAL	DATE			
[illegible]	[illegible]	[illegible]	E	A
[illegible]	4-4-[illegible]	[illegible]	F	B
[illegible]	[illegible]	[illegible]	F	C
[illegible]	11-[illegible]-76	[illegible]	F	D

TITLE

LOGIC DIAGRAM

KEYBOARD

9 WIDE SPACE BAR 1520 II

THESE DRAWINGS AND SPECIFICATIONS ARE THE PROPERTY OF DATAMEDIA CORPORATION AND SHALL NOT BE REPRODUCED OR COPIED OR USED AS THE BASIS FOR THE MANUFACTURE OR SALE OF APPARATUS WITHOUT PERMISSION.

DRAWN BY R.L. [illegible] 4-1-76

CHECKED BY

SCALE

NEXT ASSY

USED ON

DATAMEDIA CORPORATION

ENG APP'D

APP'D FOR MFG

DWG. NO. 3AAAA022

REV. D

SHEET 4 OF 6

SIZE D

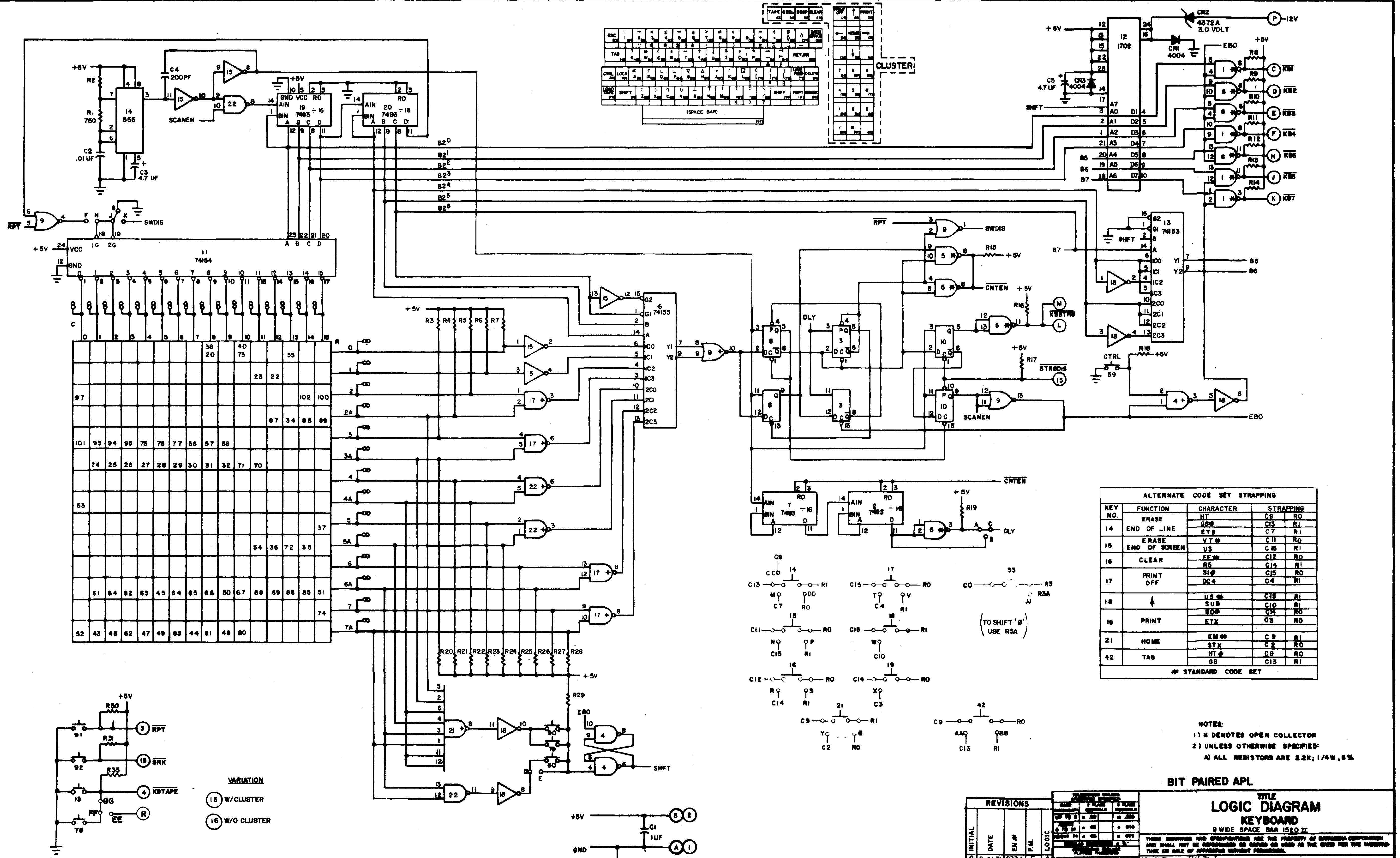

555
74154
7493 ÷16
74153
1702
CLUSTER
SPACE BAR
SCANEN
SWDIS
RPT
CNTEN
DLY
KBSTRB
STRBDIS
EBO
SHFT
KB1
KB2
KB3
KB4
KB5
KB6
KB7
B5
B6
B7
CR2 4372A 3.0 VOLT
CR1 4004
CR3 4004
C1 1UF
C2 .01 UF
C3 4.7 UF
C4 200PF
C5 4.7 UF
-12V
+5V
GND
BRK
KBTAPE
TO SHIFT 'Ø' USE R3A
VARIATION
(15) W/CLUSTER
(16) W/O CLUSTER

ALTERNATE CODE SET STRAPPING			
KEY NO.	FUNCTION	CHARACTER	STRAPPING	
14	ERASE END OF LINE	HT	C9	R0
		GS#	C13	R1
		ETB	C7	R1
15	ERASE END OF SCREEN	VT#	C11	R0
		US	C15	R1
16	CLEAR	FF#	C12	R0
		RS	C14	R1
17	PRINT OFF	SI#	C15	R0
		DC4	C4	R1
18	↓	US#	C15	R1
		SUB	C10	R1
19	PRINT	SO#	C14	R0
		ETX	C3	R0
21	HOME	EM#	C9	R1
		STX	C2	R0
42	TAB	HT#	C9	R0
		GS	C13	R1

STANDARD CODE SET

NOTES:

1) ✱ DENOTES OPEN COLLECTOR

2) UNLESS OTHERWISE SPECIFIED:

A) ALL RESISTORS ARE 2.2K; 1/4W, 5%

BIT PAIRED APL

REVISIONS				
INITIAL	DATE	EN #	P.M.	LOGIC
RL	3-31-76	0331	E	A
RL	4-15-76	0340	E	B
RL	5-24-76	0353	F	C
RL	9-10-76	0393	F	D

TITLE
LOGIC DIAGRAM
KEYBOARD
9 WIDE SPACE BAR 1520 II

THESE DRAWINGS AND SPECIFICATIONS ARE THE PROPERTY OF DATAMEDIA CORPORATION AND SHALL NOT BE REPRODUCED OR COPIED OR USED AS THE BASIS FOR THE MANUFACTURE OR SALE OF APPARATUS WITHOUT PERMISSION.

DRAWN BY R Lightcap 4-1-76
CHECKED BY
ENG APP'D
APP'D FOR MFG
SCALE

DATAMEDIA CORPORATION

DWG. NO. 3AAA4022 D

SHEET 5 OF 6

X-Y ADDRESSING FOR ELITE 1520A APL/ASCII
CURSOR ADDRESS

Character Address

Dec.	B_7	B_6	B_5	B_4	B_3	B_2	B_1	ASCII
1.	0	1	0	0	0	0	0	SPACE
2.	0	1	0	0	0	0	1	!
3.	0	1	0	0	0	1	0	"
4.	0	1	0	0	0	1	1	#
5.	0	1	0	0	1	0	0	$
6.	0	1	0	0	1	0	1	%
7.	0	1	0	0	1	1	0	&
8.	0	1	0	0	1	1	1	'
9.	0	1	0	1	0	0	0	(
10.	0	1	0	1	0	0	1	)
11.	0	1	0	1	0	1	0	*
12.	0	1	0	1	0	1	1	+
13.	0	1	0	1	1	0	0	,
14.	0	1	0	1	1	0	1	-
15.	0	1	0	1	1	1	0	.
16.	0	1	0	1	1	1	1	/
17.	0	1	1	0	0	0	0	0
18.	0	1	1	0	0	0	1	1
19.	0	1	1	0	0	1	0	2
20.	0	1	1	0	0	1	1	3
21.	0	1	1	0	1	0	0	4
22.	0	1	1	0	1	0	1	5
23.	0	1	1	0	1	1	0	6
24.	0	1	1	0	1	1	1	7
25.	0	1	1	1	0	0	0	8
26.	0	1	1	1	0	0	1	9
27.	0	1	1	1	0	1	0	:
28.	0	1	1	1	0	1	1	;
29.	0	1	1	1	1	0	0	<
30.	0	1	1	1	1	0	1	=
31.	0	1	1	1	1	1	0	>
32.	0	1	1	1	1	1	1	?
33.	1	0	0	0	0	0	0	@
34.	1	0	0	0	0	0	1	A
35.	1	0	0	0	0	1	0	B
36.	1	0	0	0	0	1	1	C
37.	1	0	0	0	1	0	0	D
38.	1	0	0	0	1	0	1	E
39.	1	0	0	0	1	1	0	F
40.	1	0	0	0	1	1	1	G
41.	1	0	0	1	0	0	0	H
42.	1	0	0	1	0	0	1	I
43.	1	0	0	1	0	1	0	J
44.	1	0	0	1	0	1	1	K
45.	1	0	0	1	1	0	0	L

X-Y ADDRESSING FOR ELITE 1520A APL/ASCII

Character Address (continued)

Dec.	B_7	B_6	B_5	B_4	B_3	B_2	B_1	ASCII
46.	1	0	0	1	1	0	1	M
47.	1	0	0	1	1	1	0	N
48.	1	0	0	1	1	1	1	O
49.	1	0	1	0	0	0	0	P
50.	1	0	1	0	0	0	1	Q
51.	1	0	1	0	0	1	0	R
52.	1	0	1	0	0	1	1	S
53.	1	0	1	0	1	0	0	T
54.	1	0	1	0	1	0	1	U
55.	1	0	1	0	1	1	0	V
56.	1	0	1	0	1	1	1	W
57.	1	0	1	1	0	0	0	X
58.	1	0	1	1	0	0	1	Y
59.	1	0	1	1	0	1	0	Z
60.	1	0	1	1	0	1	1	[
61.	1	0	1	1	1	0	0	\
62.	1	0	1	1	1	0	1	]
63.	1	0	1	1	1	1	0	↑
64.	1	0	1	1	1	1	1	←
65.	1	1	0	0	0	0	0	`
66.	1	1	0	0	0	0	1	a
67.	1	1	0	0	0	1	0	b
68.	1	1	0	0	0	1	1	c
69.	1	1	0	0	1	0	0	d
70.	1	1	0	0	1	0	1	e
71.	1	1	0	0	1	1	0	f
72.	1	1	0	0	1	1	1	g
73.	1	1	0	1	0	0	0	h
74.	1	1	0	1	0	0	1	i
75.	1	1	0	1	0	1	0	j
76.	1	1	0	1	0	1	1	k
77.	1	1	0	1	1	0	0	l
78.	1	1	0	1	1	0	1	m
79.	1	1	0	1	1	1	0	n
80.	1	1	0	1	1	1	1	o

X-Y ADDRESSING FOR ELITE 1520A APL/ASCII

Row Address

	B_7	B_6	B_5	B_4	B_3	B_2	B_1
1.	x	x	0	0	0	0	0
2.	x	x	0	0	0	0	1
3.	x	x	0	0	0	1	0
4.	x	x	0	0	0	1	1
5.	x	x	0	0	1	0	0
6.	x	x	0	0	1	0	1
7.	x	x	0	0	1	1	0
8.	x	x	0	0	1	1	1
9.	x	x	0	1	0	0	0
10.	x	x	0	1	0	0	1
11.	x	x	0	1	0	1	0
12.	x	x	0	1	0	1	1
13.	x	x	0	1	1	0	0
14.	x	x	0	1	1	0	1
15.	x	x	0	1	1	1	0
16.	x	x	0	1	1	1	1
17.	x	x	1	0	0	0	0
18.	x	x	1	0	0	0	1
19.	x	x	1	0	0	1	0
20.	x	x	1	0	0	1	1
21.	x	x	1	0	1	0	0
22.	x	x	1	0	1	0	1
23.	x	x	1	0	1	1	0
24.	x	x	1	0	1	1	1
25.	x	x	1	1	0	0	0

WARRANTY

The Warranty Period for the equipment is ninety (90) days commencing from the receipt of each unit.

Under the Warranty, Datamedia Corporation will correct any defects in materials and workmanship when the unit or relevant sub-assembly is returned to the factory prepaid. Written authorization must be obtained and confirmed in writing by Datamedia Corporation before returning units or sub-assemblies to the factory.

Under this Warranty, Datamedia Corporation will provide the necessary components required by the customer to repair the unit in the field. The components will be shipped, prepaid, on an invoice which will be cancelled upon receipt of the defective components at the factory. When ordering components for repair or replacement, the Model Number and Serial Number of the unit must be included on the customer request.

This Warranty is invalid if the Terminal is subject to misuse, abuse, neglect, accident, improper installation or application, alteration or negligence in use, storage, transportation or handling and where the Serial Number has been removed, defaced or changed.