THIS SCHEMATIC IS FURNISHED ONLY FOR TEST AND MAINTENANCE PURPOSES. THE CIRCUITS ARE PROPRIETARY IN NATURE AND SHOULD BE TREATED ACCORDINGLY.
COPYRIGHT 1966 BY DIGITAL EQUIPMENT CORPORATION

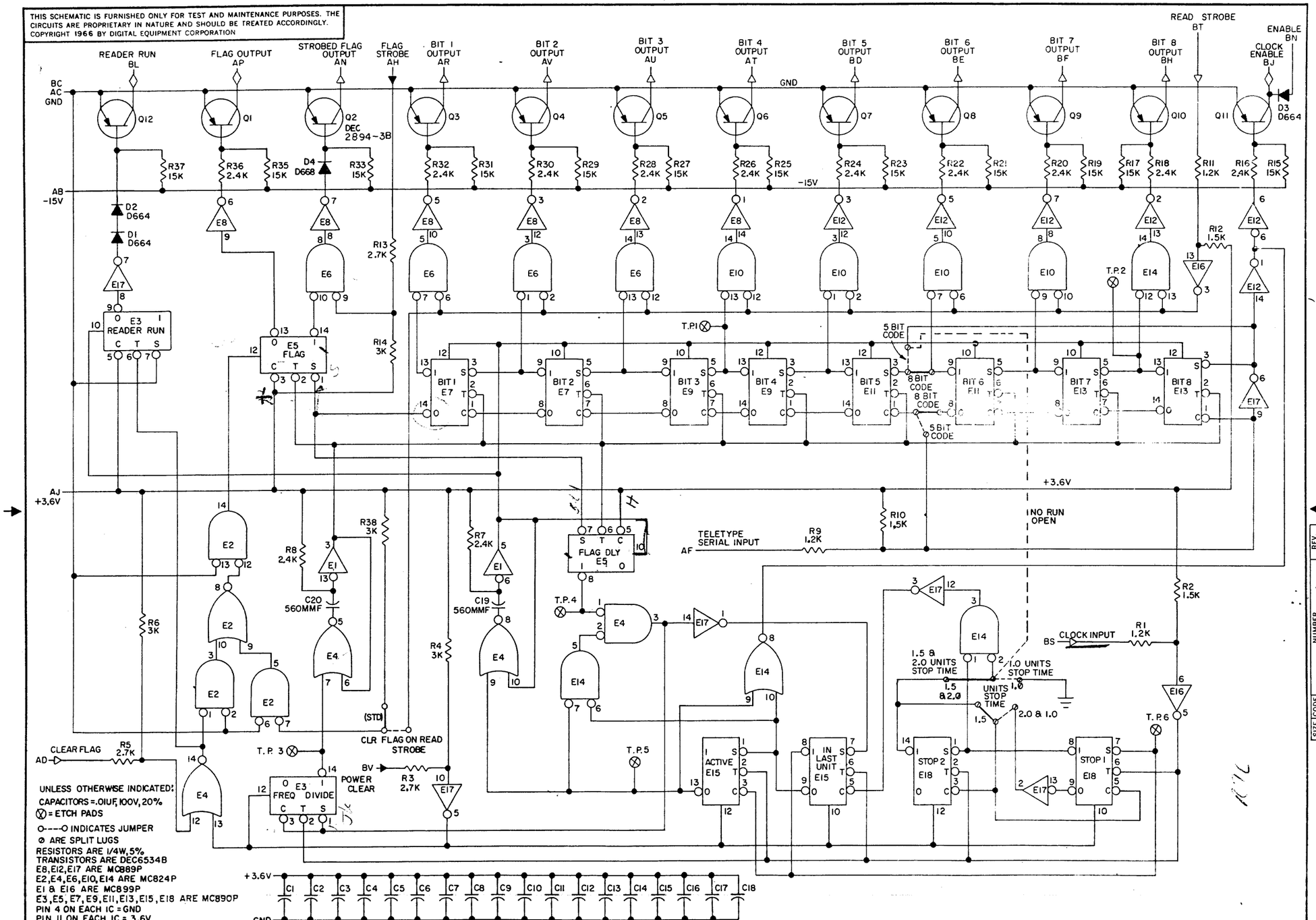

REVISIONS					
CHK	CHG NO.	REV	REV & REDR	TYM	
		B	00002	F	
			00003	H	
			00004	J	
			00005		

DRN. HALLER	DATE 10-27-66	
CHK'D PERRYMAN	DATE 10-27-66	
ENG. RICKETTS	DATE 10-27-66	
PROD.	DATE	

TRANSISTOR & DIODE CONVERSION CHART

DEC	EIA	DEC	EIA
DEC6534B	MPS6534	D668 *	
D664	IN3606		

digital EQUIPMENT CORPORATION
MAYNARD, MASSACHUSETTS

TITLE TELETYPE RECEIVER W706

SIZE	CODE	NUMBER	REV
C	CS	W706-0-1	J

PRINTED CIRCUIT REV. E

REV J | NUMBER W706-0-1 | CODE CS | SIZE C

DEC FORM NO. DRC 102