American National Standard

Adopted for Use by the Federal Government

FIPS PUB 52

See Notice on Inside Front Cover

recorded magnetic tape cartridge for information interchange 4 track, 0.250 inch (6.30 mm), 1600 bpi (63 bpmm), phase encoded

ANSI X3.56-1977

american national standards institute, inc.
1430 broadway, new york, new york 10018

JK468
.A8A3
no.57
1977
c.2

This standard has been adopted for Federal Government use.

Details concerning its use within the Federal Government are contained in FIPS PUB 52, Recorded Magnetic Tape Cartridge for Information Interchange, 4-Track, 6.30 mm (0.250 in), 63 bpmm (1600 bpi), Phase Encoded. For a complete list of the publications available in the Federal Information Processing Standards Series, write to the Office of Technical Information and Publications, National Bureau of Standards, Washington, D.C. 20234.

National Bureau of Standards
DEC 7 1978

ANSI®
X3.56-1977

American National Standard Recorded Magnetic Tape Cartridge for Information Interchange 4 Track, 0.250 inch (6.30 mm), 1600 bpi (63 bpmm), Phase Encoded

Secretariat

Computer and Business Equipment Manufacturers Association

Approved June 25, 1976

American National Standards Institute, Inc

American National Standard

An American National Standard implies a consensus of those substantially concerned with its scope and provisions. An American National Standard is intended as a guide to aid the manufacturer, the consumer, and the general public. The existence of an American National Standard does not in any respect preclude anyone, whether he has approved the standard or not, from manufacturing, marketing, purchasing, or using products, processes, or procedures not conforming to the standard. American National Standards are subject to periodic review and users are cautioned to obtain the latest editions.

CAUTION NOTICE: This American National Standard may be revised or withdrawn at any time. The procedures of the American National Standards Institute require that action be taken to reaffirm, revise, or withdraw this standard no later than five years from the date of publication. Purchasers of American National Standards may receive current information on all standards by calling or writing the American National Standards Institute.

Published by

American National Standards Institute
1430 Broadway, New York, New York 10018

Copyright © 1977 by American National Standards Institute, Inc
All rights reserved.

No part of this publication may be reproduced in any form, in an electronic retrieval system or otherwise, without the prior written permission of the publisher.

Printed in the United States of America

P6M578/425

Foreword

(This Foreword is not part of American National Standard Recorded Magnetic Tape Cartridge for Information Interchange, 1600 bpi (63 bpmm), Phase Encoded, X3.56-1977.)

This standard presents the standard technique for recording the American National Standard Code for Information Interchange X3.4-1977 (ASCII) on a magnetic tape cartridge at 1600 bpi (63 bpmm) using phase recording techniques. It is one of a series of standards implementing ASCII in media.

Related standards define more fully the physical and magnetic properties of the magnetic tape cartridge and specify a standard record format and labels.

The X3B5 Technical Committee on Magnetic Tape Cassettes, which developed this standard, consists of a group of experienced and qualified specialists on the recording of digital information on magnetic tape. In the development of this standard careful consideration was given to current practices, existing equipment and supplies, and the broadest possible acceptance, and to providing a basis for future improvement in the use of the medium.

This standard was approved as an American National Standard by ANSI on June 25, 1976.

Suggestions for improvement of this standard will be welcome. They should be sent to the American National Standards Institute, 1430 Broadway, New York, N.Y. 10018.

This standard was processed and approved for submittal to ANSI by American National Standard Committee on Computers and Information Processing, X3. Committee approval of the standard does not necessarily imply that all committee members voted for its approval. At the time it approved this standard, the X3 Committee had the following members:

J. F. Auwaerter, Chairman
R. M. Brown, Vice-Chairman
W. F. Hanrahan, Secretary

Organization Represented	*Name of Representative*
Addressograph Multigraph Corporation	A. C. Brown
	D. Anderson (Alt)
Air Transport Association	F. C. White
	C. Hart (Alt)
American Library Association	J. R. Rizzolo
	J. C. Kountz (Alt)
	M. S. Malinconico (Alt)
American Nuclear Society	D. R. Vondy
	M. K. Butler (Alt)
American Society for Information Science	M. C. Kepplinger
Association for Computing Machinery	P. Skelly
	J. A. N. Lee (Alt)
	H. E. Thiess (Alt)
Association for Educational Data Systems	A. K. Swanson
Association of American Railroads	R. A. Petrash
Association of Computer Programmers and Analysts	L. A. Ruh
	M. A. Morris, Jr (Alt)
Association of Data Processing Service Organizations	J. B. Christiansen
Burroughs Corporation	E. Lohse
	J. S. Foley (Alt)
	J. F. Kalbach (Alt)
Computer Industry Association	N. J. Ream
	A. G. W. Biddle (Alt)
Control Data Corporation	C. E. Cooper
	G. I. Williams (Alt)
Datapoint Corporation	V. D. Poor
	H. W. Swanson (Alt)
Data Processing Management Association	A. E. Dubnow
	D. W. Sanford (Alt)
Digital Equipment Corporation	P. White
	A. R. Kent (Alt)

Organization Represented	*Name of Representative*
Edison Electric Institute	S. P. Shrivastava
	J. L. Weiser (Alt)
General Services Administration	D. L. Shoemaker
	M. L. Burris (Alt)
GUIDE International	T. E. Wiese
	B. R. Nelson (Alt)
	D. Stanford (Alt)
Honeywell Information Systems, Inc	T. J. McNamara
	E. H. Clamons (Alt)
Institute of Electrical and Electronics Engineers, Communications Society	(Representation Vacant)
Institute of Electrical and Electronics Engineers, Computer Society	R. L. Curtis
	T. Feng (Alt)
International Business Machines Corporation	L. Robinson
	W. F. McClelland (Alt)
Joint Users Group	T. E. Wiese
	L. Rodgers (Alt)
Life Office Management Association	R. Ricketts
	J. F. Foley (Alt)
	E. J. Jowdy (Alt)
Litton Industries	I. Danowitz
National Association of State Information Systems	G. H. Roehm
	J. L. Lewis (Alt)
	G. I. Theis (Alt)
National Bureau of Standards	H. S. White, Jr
	R. E. Rountree (Alt)
National Communications System	M. L. Cain
	G. W. White (Alt)
National Machine Tool Builders Association	O. A. Rodriques
NCR Corporation	R. J. Mindlin
	A. R. Daniels (Alt)
	T. W. Kern (Alt)
Olivetti Corporation of America	E. J. Almquist
Pitney Bowes, Inc	R. H. Fenn
	E. T. Warzecha (Alt)
Printing Industries of America	N. Scharpf
	E. Masten (Alt)
Recognition Equipment, Inc	H. F. Schantz
	W. E. Viering (Alt)
Sanders Associates, Inc	A. L. Goldstein
	T. H. Buchert (Alt)
Scientific Apparatus Makers Association	A. Savitsky
	J. E. French (Alt)
SHARE Incorporated	T. B. Steel, Jr
	E. Brubaker (Alt)
Society of Certified Data Processors	T. M. Kurihara
	A. E. Dubnow (Alt)
Telephone Group	V. N. Vaughan, Jr
	J. C. Nelson (Alt)
	P. G. Wray (Alt)
3M Company	R. C. Smith
UNIVAC, Division of Sperry Rand Corporation	M. W. Bass
	C. D. Card (Alt)
U.S. Department of Defense	W. L. McGreer
	W. B. Rinehuls (Alt)
	W. B. Robertson (Alt)
U.S. Department of Health, Education and Welfare	W. R. McPherson, Jr
	M. A. Evans, (Alt)
VIM (CDC 6000 Users Group)	S. W. White
	M. R. Speers, (Alt)
Xerox Corporation	J. L. Wheeler
	A. R. Machell (Alt)

Subcommittee X3B5 on Magnetic Tape Cassettes, which developed this standard, had the following members:

R. C. Smith, Chairman

R. E. Arko
A. Auden
R. Bartholomew
B. D. Benz
J. A. Buchanan
D. H. Cameron
V. Chrzanowski
E. Clark
R. P. Clark
R. M. Connor
P. A. Cosby
J. B. Davis
R. Duffy
D. Fowler
R. L. Fussell
M. D. Gray
M. Grundtner
H. Hemdal
J. Hill
M. D. Hogan
C. L. Holder
V. J. Jenkins
R. Kavlick
N. A. Leifer
H. Levin
W. McCandless
J. McCoy
A. B. Manildi
R. N. Miller
D. Mills
W. T. Morin
G. S. Newton
D. P. Norman
R. F. Pariury
W. B. Poland, Jr
J. Pomian
L. A. Rice
J. Russo
H. W. Sallet
B. D. Shapely
R. Silva
R. T. Steinbrenner
R. Stillman
V. L. Thompson
R. A. vonBehren
R. G. Wampach
L. A. Whitaker
J. E. Williams
R. E. Wolff
W. D. Woo
R. Young
J. S. Zajaczkowski
S. Zalewa

Contents

SECTION PAGE

1. Scope and Purpose . . . 9
   1.1 Scope . . . 9
   1.2 Purpose . . . 9

2. Definitions and Explanations of Terms as Used in This Standard . . . 9
   2.1 Magnetic Tape Cartridge . . . 9
   2.2 Flux Reversal . . . 9
   2.3 Density . . . 9
   2.4 Recorded Block . . . 9
   2.5 Data Block . . . 12
   2.6 Interblock Gap . . . 12
   2.7 In Contact . . . 12
   2.8 Control Block (Tape Mark) . . . 12
   2.9 Reference Alignment Cartridge . . . 12
   2.10 Preamble . . . 12
   2.11 Postamble . . . 12
   2.12 CRC Character . . . 12
   2.13 Beginning of Tape (BOT) Marker . . . 12
   2.14 End of Tape (EOT) Marker . . . 12
   2.15 Load Point (LP) Marker . . . 12
   2.16 Early Warning (EW) Marker . . . 12
   2.17 Amplitude Reference Tape . . . 12
   2.18 Standard Reference Current . . . 12
   2.19 Standard Reference Amplitude . . . 12
   2.20 Track . . . 12

3. Recording . . . 12
   3.1 Method . . . 12
   3.2 Equipment . . . 14
   3.3 Density . . . 14
   3.4 Flux Reversal Spacing . . . 14
   3.5 Signal Amplitude . . . 15
   3.6 Erase . . . 15

4. Format . . . 15
   4.1 Number of Tracks . . . 15
   4.2 Use of Tracks . . . 15
   4.3 Byte and Code Requirements . . . 15
   4.4 Gaps . . . 15
   4.5 Block Length . . . 15
   4.6 Control Block (Tape Mark) . . . 16
   4.7 CRC Character . . . 16
   4.8 Useable Recording Area . . . 16

Figures
   Fig. 1 Cartridge Diagram . . . 10
   Fig. 2 Recorded Block . . . 11
   Fig. 3 Tape Position Holes and Recording Format . . . 13
   Fig. 4 Tape Guide and Track Dimensions . . . 14

American National Standard Recorded Magnetic Tape Cartridge for Information Interchange 4 Track, 0.250 inch (6.30 mm), 1600 bpi (63 bpmm), Phase Encoded

1. Scope and Purpose

1.1 Scope. This American National Standard is intended to provide a format and recording standard for a 0.250-inch (6.30-mm) -wide, 4-track, magnetic tape in a cartridge to be used for information interchange between information processing systems, communication systems, and associated equipment utilizing the American National Standard Code for Information Interchange, X3.4-1977 (ASCII). This standard refers solely to recording on the 0.250-inch (6.30-mm) magnetic tape cartridge and complements American National Standard Unrecorded Magnetic Tape Cartridge for Information Interchange, 0.250 inch (6.30 mm), 1600 bpi (63 bpmm), Phase Encoded, X3.55-1977, where the following sections are dealt with in detail: general requirements, definition, tape and cartridge, physical and magnetic requirements, speed requirements, and write enable feature. Compliance with the unrecorded standard is a requirement for information interchange.

CAUTION NOTICE: The user's attention is called to the possibility that compliance with this standard may require use of an invention covered by patent rights.

By publication of this standard, no position is taken with respect to the validity of this claim or of any patent rights in connection therewith. The patent holder has, however, filed a statement of willingness to grant a license under these rights on reasonable and nondiscriminatory terms and conditions, to applicants desiring to obtain such a license. Details may be obtained from the publisher.

No representation or warranty is made or implied that this is the only license that may be required to avoid infringement in the use of this standard.

1.2 Purpose

1.2.1 This standard defines the requirements and supporting test methods necessary to ensure interchange at acceptable performance levels. It is distinct from a specification in that it delineates a minimum of restrictions consistent with compatibility in interchange transactions.

1.2.2 Wherever feasible, quantitative performance levels that will be met or exceeded as a result of conformance to this standard are given. Quantiative limits for some of the requirements falling within the scope of this standard are not stated but are left to agreement between interchange parties. Standard test methods and measurement procedures shall be used to establish such quantities.

1.2.3 In this standard toleranced dimensions are converted from U.S. customary units to SI units in accordance with Method B in ISO R 370-1975, Toleranced Dimensions – Conversion from Inches to Millimeters and Vice Versa.[1,2] U.S. customary units are the original dimensions in this standard.

1.2.4 Except as indicated in 1.2.2 above, interchange parties conforming to the applicable standards should be able to achieve compatibility without need for additional exchange of technical information.

2. Definitions and Explanations of Terms as Used in This Standard

2.1 Magnetic Tape Cartridge. A magnetic tape cartridge refers to a cartridge containing 0.250-inch (6.30-mm) -wide magnetic tape wound on two coplanar hubs with an internal drive belt to transport the tape between the hubs (see Fig. 1).

2.2 Flux Reversal. The position of a flux reversal is defined as that point which exhibits the maximum free space flux density normal to the tape surface.

2.3 Density. Density refers to the number of data bit flux reversals per unit length of recorded track, exclusive of phase flux reversals; density is usually expressed in bits per inch.

2.4 Recorded Block. A recorded block is a group of contiguously recorded bits which extend from one interblock gap to the next interblock gap. This includes the data bits, CRC, and synchronizing bits, such as preamble and postamble (see Fig. 2).

---

[1] In the corresponding national standards of ISO member nations, additional rounding may be done to produce preferred values. These values usually lie within the original tolerance ranges.

[2] Available from American National Standards Institute, Inc, 1430 Broadway, New York, N.Y. 10018.

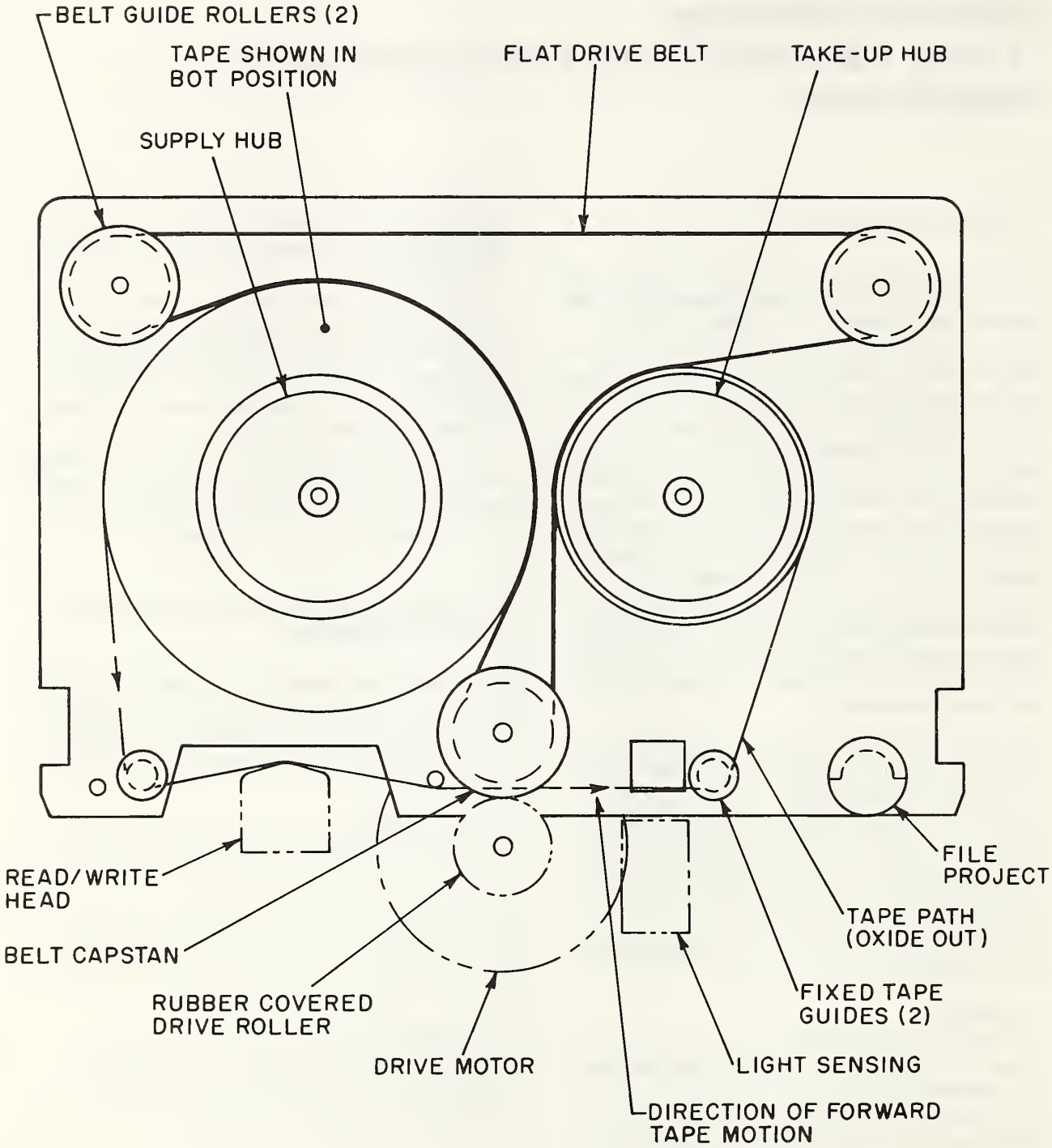

Fig. 1
Cartridge Diagram

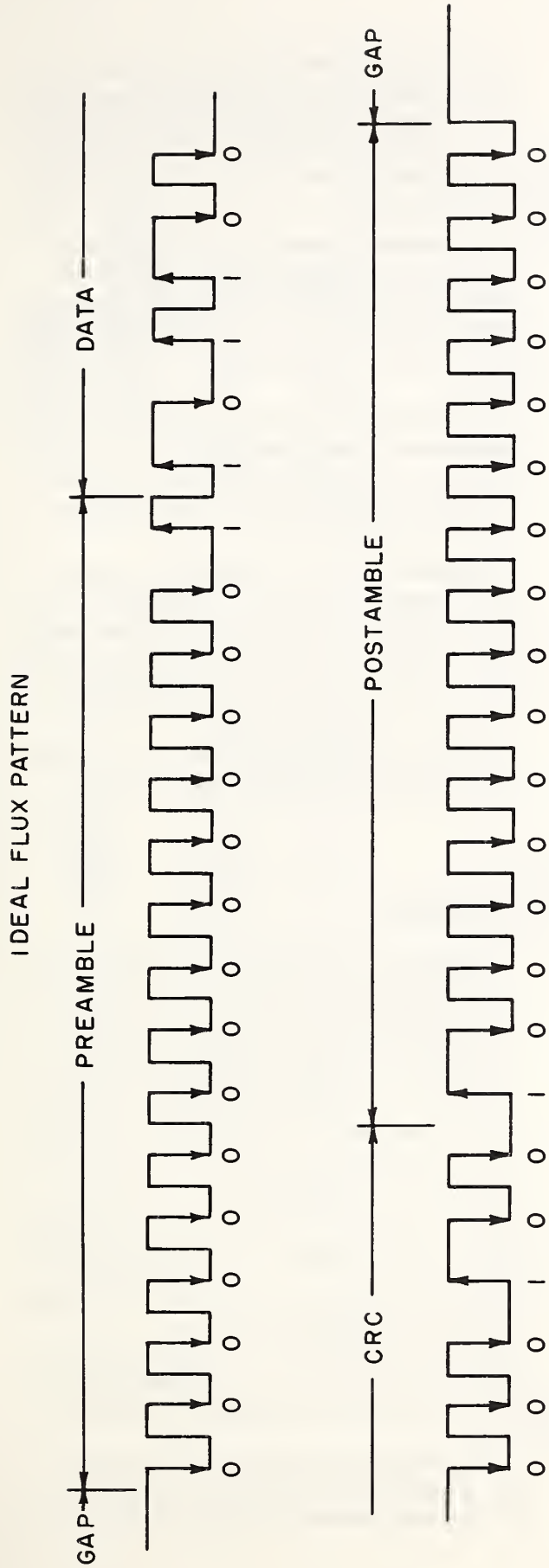

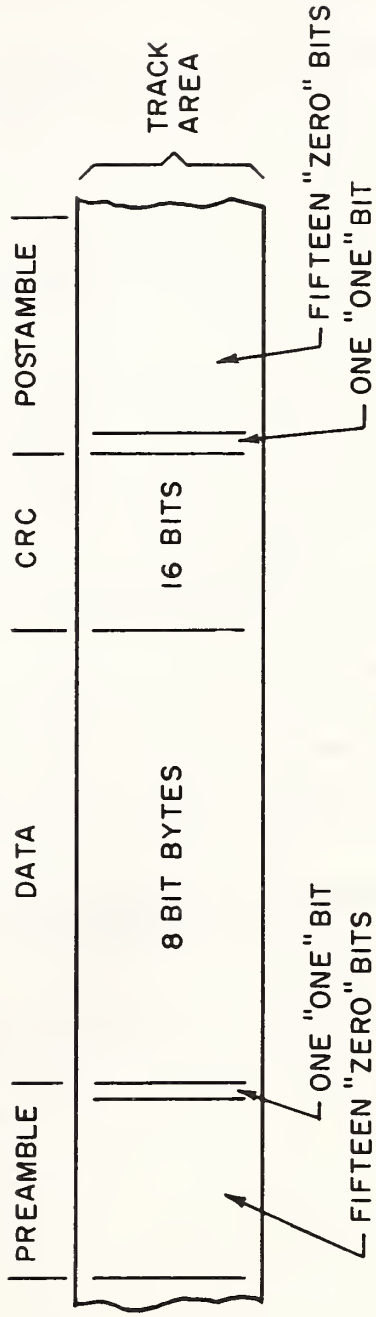

Fig. 2
Recorded Block

2.5 Data Block. A data block is a group of contiguously recorded bits, less CRC and synchronizing bits, such as preambles and postambles, considered and transported as a unit containing one or more logical records, or portions of logical records.

2.6 Interblock Gap. An interblock gap is a dc erased section of tape separating blocks of information.

2.7 In Contact. "In contact" refers to an operating condition in which the oxide side of a tape is in physical contact with a magnetic head.

2.8 Control Block (Tape Mark). A control block (tape mark) is special control block recorded on magnetic tape to serve as a separator between files and file labels, or to define the end of recorded data.

2.9 Reference Alignment Cartridge. The reference alignment cartridge is a cartridge containing tape on which continuous information has been recorded. The reference alignment cartridge has been optimized for perpendicularity of the written flux transition to the cartridge positioning plane.

2.10 Preamble. A preamble is a special sequence of bits recorded at the beginning of each recorded block.

2.11 Postamble. A postamble is a special sequence of bits recorded at the end of each recorded block.

2.12 CRC Character. The CRC is a 16-bit cyclic redundancy check character that is written after the data and preceding the postamble of each block for the purpose of error detection.

2.13 Beginning of Tape (BOT) Marker. The BOT marker is a set of two holes punched in the tape. There are three sets of holes provided, the innermost of which is used for the purpose of identifying the storage position for the cartridge. In the storage position, all of the permissible recording area is wound on the supply hub and is protected by at least one layer of tape. Cartridges to be interchanged shall be rewound to the storage position prior to interchange. The additional sets of holes are used to ensure reliability of detection (see Fig. 3).

2.14 End of Tape (EOT) Marker. The EOT marker is a single hole punched in the tape. There are three such holes along a single line. The first to pass the photo sensor during forward operation indicates that the permissible recording area has been exceeded. The additional sets of holes are used to ensure reliability of detection (see Fig. 4).

2.15 Load Point (LP) Marker. The LP marker is one hole punched in the tape to indicate the beginning of the permissible recording area in the forward direction (see Fig. 3).

2.16 Early Warning (EW) Marker. The EW marker is one hole punched in the tape between recorded tracks for the purpose of indicating the approaching end of the permissible recording area in the forward direction. Recording must halt before the EOT marker is sensed (see Fig. 3).

2.17 Amplitude Reference Tape. An amplitude reference tape is a tape selected for a given property to establish the reference output signal level when recorded with continuous "1's" at 3200 frpi [flux reversals per inch] (126 frpmm) [flux reversals per millimeter].

2.18 Standard Reference Current. The standard reference current is the minimum write current which, when applied to the amplitude reference tape, causes an output signal equal to 95% of the maximum output at 3200 frpi (126 frpmm).

2.19 Standard Reference Amplitude. The standard reference amplitude is the peak-to-peak output level which is read from the amplitude reference tape when written at 3200 frpi (126 frpmm) with a write current that is 1.5 times the value of the standard reference current.

2.20 Track. A track is a longitudinal area on the tape along which a series of magnetic signals may be recorded.

3. Recording

3.1 Method. The method of recording shall be phase encoding. Each data bit requires a reversal of flux polarity in a given direction for a logical "1," and in the opposite direction for a logical "0." Phase flux reversals will occur at the nominal midpoint between data bits in order to permit the proper polarity shift for the following data bit. "Self-clocking" is attained in this recording method through the consistent occurrence of flux reversals for each data bit, 1600 times per inch (63 times per millimeter). The erasing process described in 3.6 forms part of the recording procedure.

3.1.1 Data Bit "1." A "1" data bit is defined as a flux reversal to the same polarity as the interblock gap when reading in the forward direction.

3.1.2 Data Bit "0." A "0" data bit is defined as a flux reversal to the polarity that is opposite to that of the interblock gap when reading in the forward direction.

3.1.3 Phase Flux Reversals. Flux reversals that occur at the nominal midpoint between successive "1" bits or between successive "0" bits to establish proper

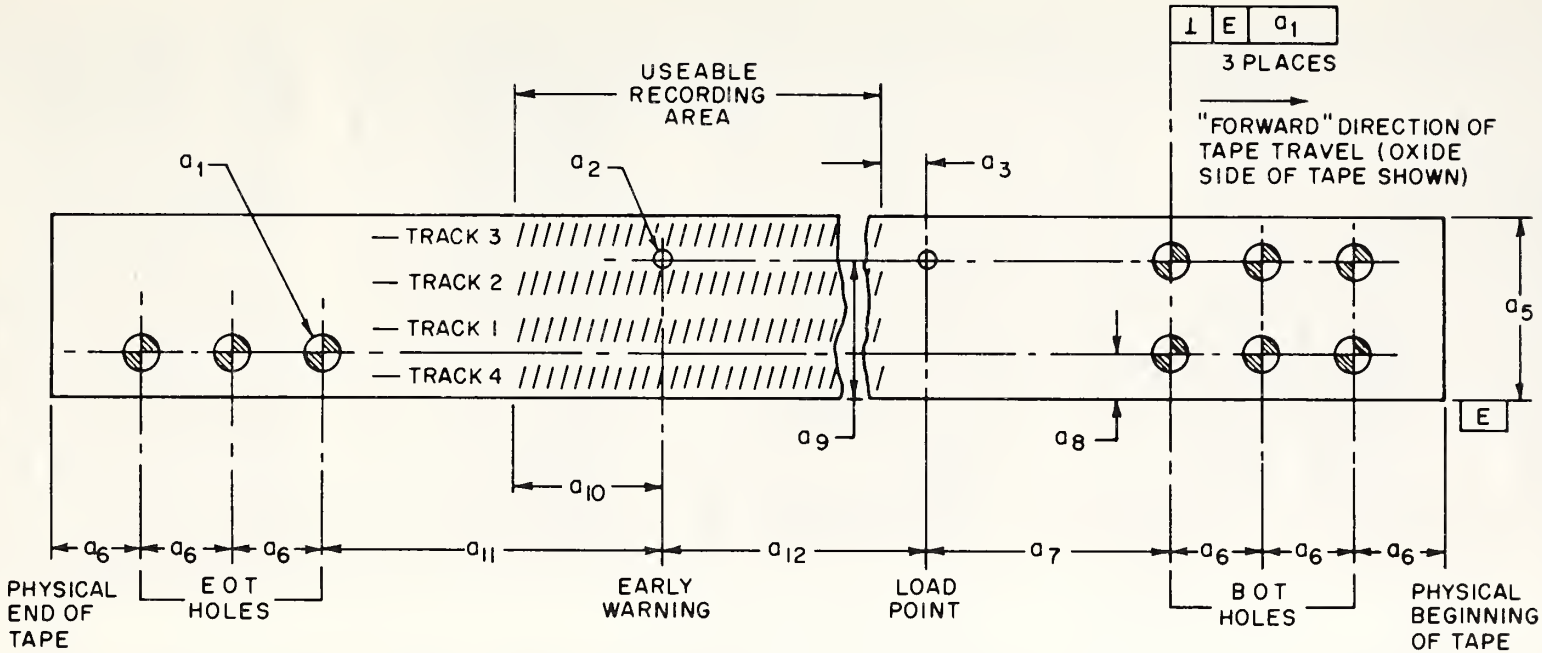

Dimension	Inches	Millimeters
a_1	0.046 (± 0.002)*	1.17 (± 0.05)*
a_2	0.023 (± 0.002)†	0.58 (± 0.05)†
a_3	6‡	152.4‡
a_4	0.005	0.12
a_5	0.2470 (± 0.0010, − 0.0015)	6.274 (+ 0.025, − 0.038)
a_6 (6×)	18 (± 3)	457 (± 76)
a_7	36 (± 3)	914 (± 76)
a_8	0.059 (± 0.002)	1.50 (± 0.05)
a_9	0.187 (± 0.002)	4.75 (± 0.05)
a_{10}	36§	915§
a_{11}	48 (± 3)	1219 (± 76)
	Feet	Meters
a_{12}	300 (+ 10, − 0)	91.5 (+ 3.0, − 0.0)

*Diameter (9 holes).
†Diameter (2 holes).
‡Minimum.
§Maximum.

Fig. 3
Tape Position Holes and Recording Format

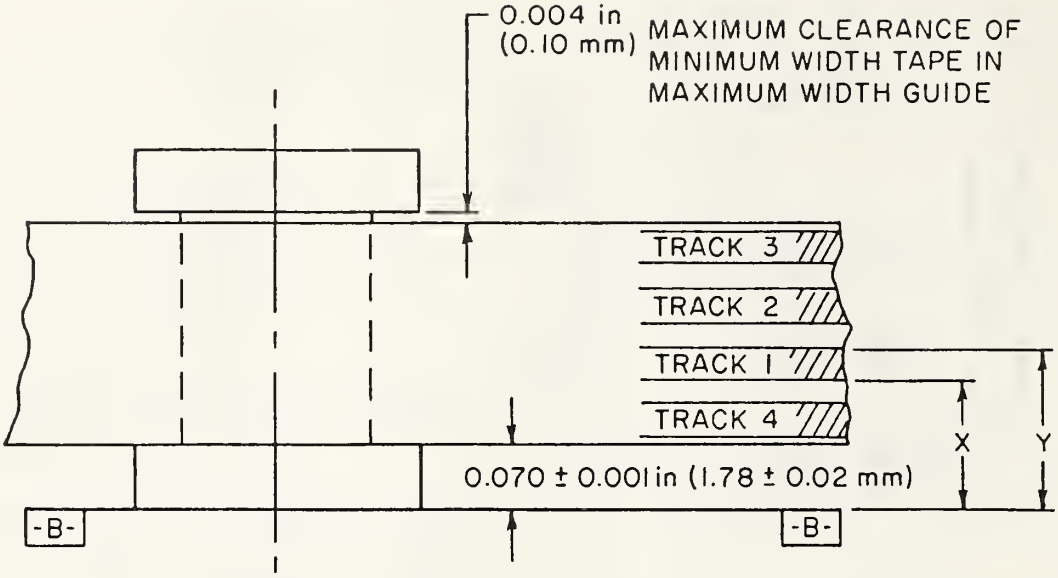

	Inches				Millimeters			
	Dimension X		Dimension Y		Dimension X		Dimension Y	
Track	Max	Min	Max	Min	Max	Min	Max	Min
1	0.146	0.130	0.194	0.178	3.71	3.30	4.93	4.52
2	0.210	0.194	0.258	0.242	5.33	4.93	6.55	6.15
3	0.274	0.258	0.322	0.306	6.96	6.55	8.18	7.77
4	0.082	0.066	0.130	0.114	2.08	1.68	3.30	2.90

Fig. 4
Tape Guide and Track Dimensions

polarity for the following data bit are called phase flux reversals.

3.2 Equipment. The equipment and cartridge used for interchange must satisfy the requirements of 3.3 through 3.6. All signal measurements are made at a point in the read chain where the amplitude is proportional to the rate of change of the longitudinal component of the flux at the tape surface. For the purpose of relating bit spacing along the tape to cartridge driving speed, the ratio of tape speed to the surface speed of the belt capstan shall be assumed to be exactly 0.76.

3.3 Density. The nominal recording density shall be 1600 bits per inch (63 bpmm). Density statements in bits per inch (bpmm) are always exclusive of phase flux reversals.

3.3.1 Bit Spacing. The nominal bit spacing exclusive of phase flux reversals is 625 μin (15.9 μm).

3.3.2 Long-Term Average Bit Spacing. The long-term average bit spacing shall be within ± 3% of the nominal spacing. This average shall be measured over a minimum tape length of 150 inches (3.81 mm).

3.3.3 Short-Term Average Bit Spacing. The short-term average bit spacing referred to a particular bit spacing is the average of the preceding four bit spacings. The short-term average bit spacing, exclusive of the effects of 3.4, shall be within ± 7% of the long-term average bit spacing. In addition, the short-term average bit spacing shall not change at a greater rate than 2% per bit.

3.4 Flux Reversal Spacing. To determine the instantaneous spacing between any two flux transitions, 3.4.1 and 3.4.2 must be taken together.

3.4.1 Data Bit to Data Bit Tolerance. The spacing between successive data bits without an intervening phase flux reversal shall be between 88% and 105% of the short-term average bit spacing. The spacing between successive data bits with an intervening phase flux reversal shall be between 95% and 112% of the short-term average bit spacing.

3.4.2 Data Bit to Phase Flux Reversal Tolerance. The spacing between a data bit and any adjacent phase

flux reversal shall be between 44% and 56% of the short-term average bit spacing.

3.5 Signal Amplitude. Paragraphs 3.5.1 through 3.5.5 apply to writing and reading in contact.

3.5.1 Average Signal Amplitude. The average peak-to-peak signal amplitude of the interchange tape at 3200 frpi (126 frpmm) shall deviate no more than +50% or -35% from the standard reference amplitude. Averaging shall be done over a minimum of 3200 flux reversals, which, for interchange cartridges, may be segmented into groups.

3.5.2 Maximum Signal Amplitude. The peak-to-peak signal amplitude at 1600 frpi (63 frpmm) shall be less than three times the standard reference amplitude.

3.5.3 Minimum Signal Amplitude. No tape when interchanged shall contain any adjacent flux reversals whose peak-to-peak signal amplitude is less than 20% of the standard reference amplitude.

3.5.4 Azimuth Alignment. When adjusted for maximum output, the read head azimuth angles for a reference alignment cartridge and for the interchange cartridge shall not differ by more than ± 10 minutes.

3.5.5 Rejected Regions. A rejected region is an area of tape extending across the track width and not more than 1.0 inch (25.4 mm) in length which exhibits permanent dropouts on two consecutive passes. The number of rejected regions in an interchange environment is a matter of agreement between interchange parties.

3.6 Erase

3.6.1 Erase Direction. The tape shall be magnetized so that the beginning of tape is a north-seeking pole.

3.6.2 Erase Function. Erasure, whether by the write head or the erase head, shall ensure that the level of the read back signal amplitude is below 3% of the average signal amplitude at 3200 frpi (126 frpmm).

4. Format

4.1 Number of Tracks. There will be up to four tracks. Each track is a data track and will be independent of the other tracks. Individual read/write units may provide one, two, or four tracks. The number one track must be readable on all units. The number two track is readable on either two or four track units (that is, track positions, track widths, and erased areas must be compatible between units with a varying number of tracks).

4.2 Use of Tracks. Each track shall be written in serial fashion starting near the BOT and continuing toward the EOT, with a rewind to BOT before initiating writing on the next track. All tracks are primarily data tracks; however, if one or more tracks are used for other than data, the number one track must always be a data track. Track locations and designations are shown in Fig. 4.

4.3 Byte and Code Requirements

4.3.1 Byte Size. The system shall be capable of reading and writing an 8-bit byte. The ASCII 7-bit coded character set (ANSI X3.4-1977) is recorded in the seven least significant bit-positions of an 8-bit byte. The eighth position is always a zero bit.

4.3.2 Bit Sequence. Bits are recorded on the tape in serial fashion. The low-order data bit (b_1) is recorded first, then the next data bit (b_2), and so on to the high-order data bit (b_8). The data bits of ASCII are numbered b_8, b_7, b_6, b_5, b_4, b_3, b_2, and b_1 from the high order to low order.

4.4 Gaps

4.4.1 Initial Gap. The initial gap is the distance between the load point and the first bit of the first recorded block on tape. The minimum distance is 6.0 inches (152.4 mm).

4.4.2 Interblock Gap (IBG). For data interchange, the length of the interblock gap shall be a minimum of 1.2 inches (30.5 mm), and a maximum of 48 inches (1.22 m). Preambles and postambles are not considered as part of the IBG.

4.4.3 Gap Polarity. The polarity of all gaps shall be established by the erase function in the direction specified in 3.6.1.

4.4.4 Integrity of Gaps. The gaps shall be dc erased. Immediately before and after each block there shall be a length of at least 0.09 in (2.5 mm) in which, exclusive of residual edge signals, there is no flux discontinuity capable of producing a read signal of more than 10% of half the standard reference amplitude.

In the remaining part of the gap one burst of spurious transitions can be tolerated, provided that the total number of transitions are seven or less.

4.5 Block Length

4.5.1 Minimum Data Block Length. The minimum data block is that group of bits, exclusive of preamble and postamble, and CRC, that can be considered a valid block. This minimum block length, exclusive of the tape mark, is six 8-bit data bytes.

4.5.2 Maximum Data Block Length. The maximum data block length is 2048 bytes.

4.5.3 Preamble. Preceding the data in each block a preamble shall be written consisting of 15 zero bits followed by a 1-bit (see Fig. 2). The preamble may be used to establish a timing sequence so that data can be read in the forward direction.

4.5.4 Postamble. Following the data and the CRC character in each block, a postamble shall be written

consisting of one 1-bit followed by 15 zero bits (see Fig. 2). The postamble may be used to establish a timing sequence so that data may be read in the reverse direction.

4.6 Control Block (Tape Mark). The control block (tape mark) shall consist of a preamble, two bytes of eight "zero" bits each, and a postamble.

4.7 CRC Character. A 16-bit CRC shall be written in each data block following the data and immediately preceding the postamble. The CRC is generated by the polynomial $X^{16} + X^{15} + X^2 + 1$.

4.8 Useable Recording Area. All data to be interchanged shall be written within the useable recording area as defined in Fig. 3.

American National Standards on Computers and Information Processing

X3.1-1976 Synchronous Signaling Rates for Data Transmission

X3.2-1970 (R1976) Print Specifications for Magnetic Ink Character Recognition

X3.3-1970 (R1976) Bank Check Specifications for Magnetic Ink Character Recognition

X3.4-1977 Code for Information Interchange

X3.5-1970 Flowchart Symbols and Their Usage in Information Processing

X3.6-1965 (R1973) Perforated Tape Code for Information Interchange

X3.9-1966 FORTRAN

X3.10-1966 Basic FORTRAN

X3.11-1969 Specification for General Purpose Paper Cards for Information Processing

X3.12-1970 Vocabulary for Information Processing

X3.14-1973 Recorded Magnetic Tape for Information Interchange (200 CPI, NRZI)

X3.15-1976 Bit Sequencing of the American National Standard Code for Information Interchange in Serial-by-Bit Data Transmission

X3.16-1976 Character Structure and Character Parity Sense for Serial-by-Bit Data Communication in the American National Standard Code for Information Interchange

X3.17-1977 Character Set and Print Quality for Optical Character Recognition (OCR-A)

X3.18-1974 One-Inch Perforated Paper Tape for Information Interchange

X3.19-1974 Eleven-Sixteenths-Inch Perforated Paper Tape for Information Interchange

X3.20-1967 (R1974) Take-Up Reels for One-Inch Perforated Tape for Information Interchange

X3.21-1967 Rectangular Holes in Twelve-Row Punched Cards

X3.22-1973 Recorded Magnetic Tape for Information Interchange (800 CPI, NRZI)

X3.23-1974 Programming Language COBOL

X3.24-1968 Signal Quality at Interface between Data Processing Terminal Equipment and Synchronous Data Communication Equipment for Serial Data Transmission

X3.25-1976 Character Structure and Character Parity Sense for Parallel-by-Bit Communication in the American National Standard Code for Information Interchange

X3.26-1970 Hollerith Punched Card Code

X3.27-1977 Magnetic Tape Labels and File Structure for Information Interchange

X3.28-1976 Procedures for the Use of the Communication Control Characters of American National Standard Code for Information Interchange in Specified Data Communication Links

X3.29-1971 Specifications for Properties of Unpunched Oiled Paper Perforator Tape

X3.30-1971 Representation for Calendar Date and Ordinal Date for Information Interchange

X3.31-1973 Structure for the Identification of the Counties of the United States for Information Interchange

X3.32-1973 Graphic Representation of the Control Characters of American National Standard Code for Information Interchange

X3.34-1972 Interchange Rolls of Perforated Tape for Information Interchange

X3.36-1975 Synchronous High-Speed Data Signaling Rates between Data Terminal Equipment and Data Communication Equipment

X3.37-1977 Programming Language APT

X3.38-1972 Identification of States of the United States (Including the District of Columbia) for Information Interchange

X3.39-1973 Recorded Magnetic Tape for Information Interchange (1600 CPI, PE)

X3.40-1976 Unrecorded Magnetic Tape for Information Interchange (9-Track 200 and 800 CPI, NRZI, and 1600 CPI, PE)

X3.41-1974 Code Extension Techniques for Use with the 7-Bit Coded Character Set of American National Standard Code for Information Interchange

X3.42-1975 Representation of Numeric Values in Character Strings for Information Interchange

X3.43-1977 Representations of Local Time of the Day for Information Interchange

X3.44-1974 Determination of the Performance of Data Communication Systems

X3.45-1974 Character Set for Handprinting

X3.46-1974 Unrecorded Magnetic Six-Disk Pack (General, Physical, and Magnetic Characteristics)

X3.47-1977 Structure for the Identification of Named Populated Places and Related Entities of the States of the United States for Information Interchange

X3.48-1977 Magnetic Tape Cassettes for Information Interchange (3.810-mm [0.150-in] Tape at 32 bpmm [800 bpi], PE)

X3.49-1975 Character Set for Optical Character Recognition (OCR-B)

X3.50-1976 Representations for U.S. Customary, SI, and Other Units to Be Used in Systems with Limited Character Sets

X3.51-1975 Representations of Universal Time, Local Time Differentials, and United States Time Zone References for Information Interchange

X3.52-1976 Unrecorded Single-Disk Cartridge (Front Loading, 2200 BPI), General, Physical, and Magnetic Requirements

X3.53-1976 Programming Language PL/I

X3.54-1976 Recorded Magnetic Tape for Information Interchange (6250 CPI, Group Coded Recording)

X3.55-1977 Unrecorded Magnetic Tape Cartridge for Information Interchange, 0.250 Inch (6.30 mm), 1600 bpi (63 bpmm), Phase Encoded

X3.56-1977 Recorded Magnetic Tape Cartridge for Information Interchange 4 Track, 0.250 Inch (6.30 mm), 1600 bpi (63 bpmm), Phase Encoded

X3.57-1977 Structure for Formatting Message Headings for Information Interchange Using the American National Standard Code for Information Interchange for Data Communication System Control

X3.58-1977 Unrecorded Eleven-Disk Pack General, Physical, and Magnetic Requirements

X3.60-1978 Minimal BASIC

For a free and complete list of all American National Standards, write:

American National Standards Institute, Inc
1430 Broadway
New York, N.Y. 10018