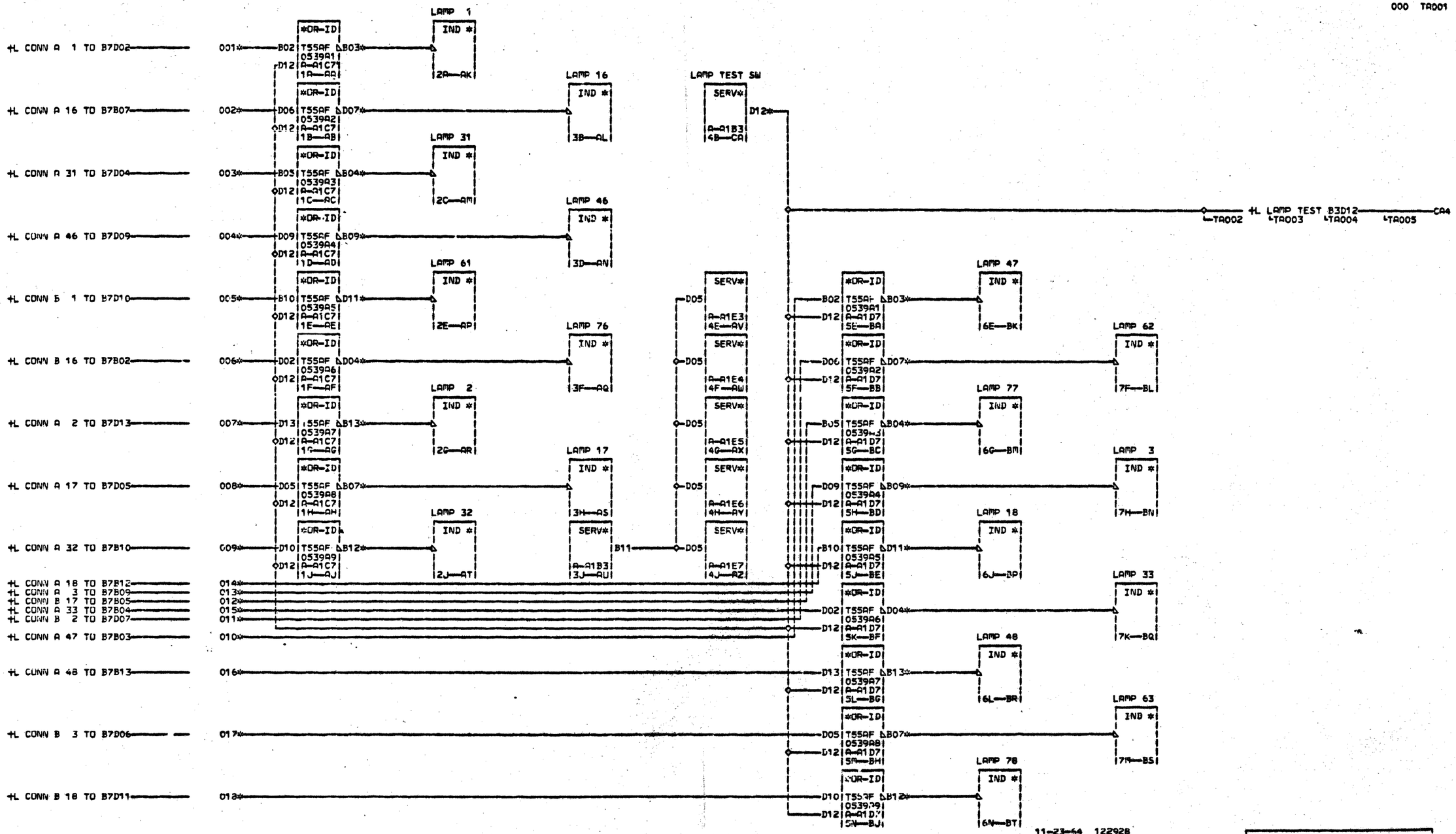

+L CONN A 1 TO B7D02
+L CONN A 16 TO B7B07
+L CONN A 31 TO B7D04
+L CONN A 46 TO B7D09
+L CONN B 1 TO B7D10
+L CONN B 16 TO B7B02
+L CONN A 2 TO B7D13
+L CONN A 17 TO B7D05
+L CONN A 32 TO B7B10
+L CONN A 18 TO B7B12
+L CONN A 3 TO B7B09
+L CONN B 17 TO B7B05
+L CONN A 33 TO B7B04
+L CONN B 2 TO B7D07
+L CONN A 47 TO B7B03
+L CONN A 48 TO B7B13
+L CONN B 3 TO B7D06
+L CONN B 18 TO B7D11

+L LAMP TEST B3D12 CA4

11-23-64 122928

T A 0 0 1 000

001 01A-A1B7D10 010 01A-A1B7B12 AA4 A-A1E7D02 BA4 A-A1E7B03 CA4 A-A1B3D12
01A-A1B7D02 006 01A-A1B7B03 015 AB4 A-A1E7B08 BB4 A-A1E7B07
002 01A-A1B7B02 011 01A-A1B7B04 AC4 A-A1E7B02 BC4 A-A1E7D04
01A-A1B7B07 007 01A-A1B7D07 016 AD4 A-A1E7D09 BD4 A-A1E7B09
003 01A-A1B7D13 012 01A-A1B7B13 AE4 A-A1E7D10 BE4 A-A1E7D11
01A-A1B7D04 008 01A-A1B7B05 017 AF4 A-A1E7B05 BF4 A-A1E7B04
004 01A-A1B7D05 013 01A-A1B7D06 AG4 A-A1E7D13 BG4 A-A1E7B13
01A-A1B7D09 009 01A-A1B7B09 018 AH4 A-A1E7D06 BH4 A-A1E7D07
005 01A-A1B7B10 014 01A-A1B7D11 AJ4 A-A1E7D12 BJ4 A-A1E7B12

EXTREME LEFT BANK OF THREE COLUMNS OF LAMPS.
DATE 11-24-64 MACH. IDTESTER
LOG 2476 FRAME 01
T A MCADON P.N. 740465
IBM CORP. GPD BLK. CB

T A 0 0 1 000

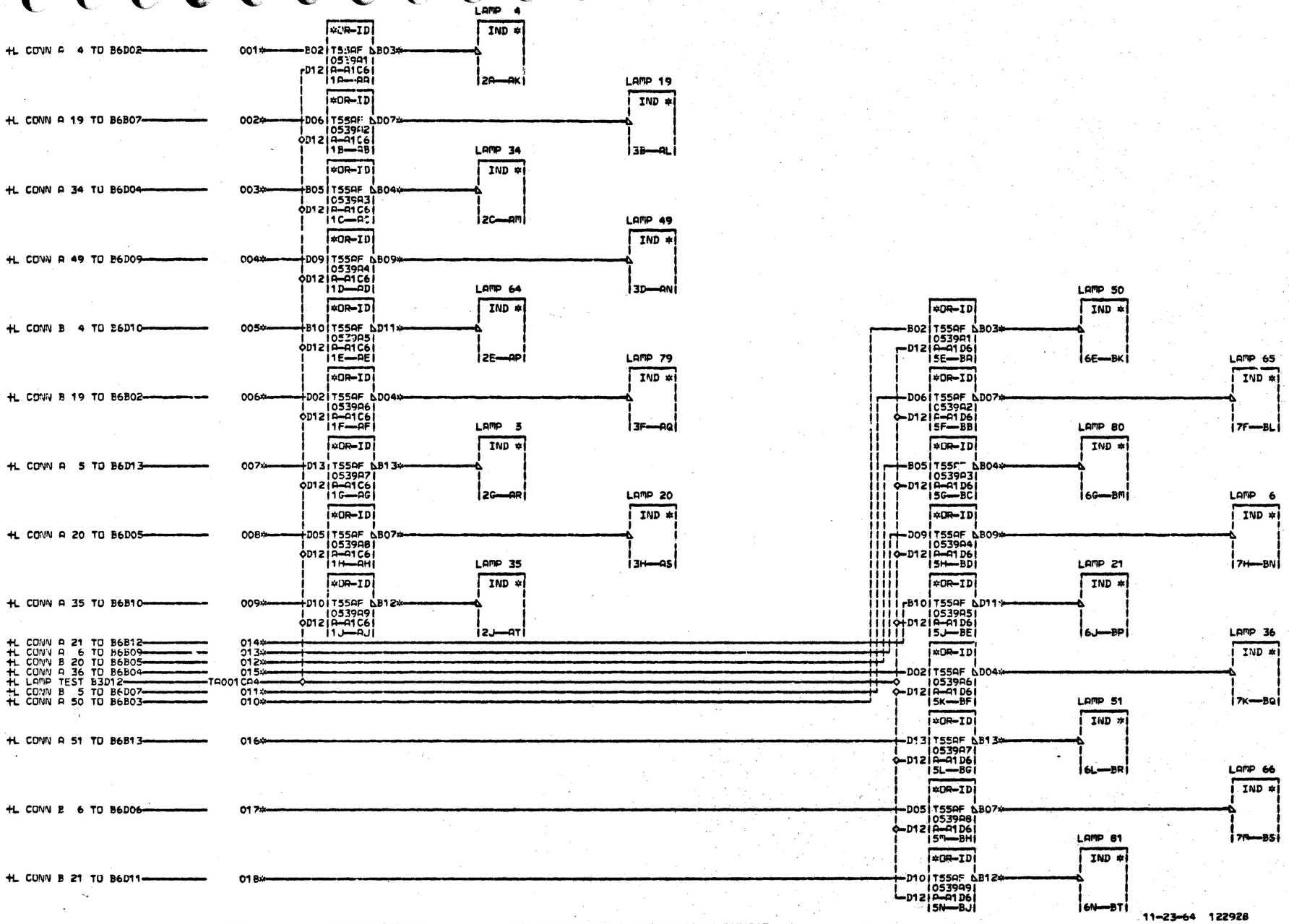

001	01A-A1B6D10	010	01A-A1B6B12	AA4	A-A1E6D02	BA4	A-A1E6B03	
	01A-A1B6D02	006	01A-A1B6B03	015	AB4	A-A1E6B08	BB4	A-A1E6B07
002	01A-A1B6B02	011	01A-A1B6B04	AC4	A-A1E6B02	BC4	A-A1E6D04	
	01A-A1B6B07	007	01A-A1B6D07	016	AD4	A-A1E6D09	BD4	A-A1E6B09
003	01A-A1B6D13	012	01A-A1B6B13	AE4	A-A1E6D10	BE4	A-A1E6D11	
	01A-A1B6D04	008	01A-A1B6B05	017	AF4	A-A1E6B05	BF4	A-A1E6B04
004	01A-A1B6D05	013	01A-A1B6D06	AG4	A-A1E6D13	BG4	A-A1E6B13	
	01A-A1B6D09	009	01A-A1B6B09	018	AH4	A-A1E6D06	BH4	A-A1E6D07
005	01A-A1B6B10	014	01A-A1B6D11	AJ4	A-A1E6D12	BJ4	A-A1E6B12	

TA002 000

CENTER LEFT BANK OF THREE COLUMNS OF LAMPS.
DATE 11-24-64 MACH. IOTESTER
LOG 2476 FRAME 01
T M MCADON P.N. 740466
IBM CORP. GPD BLK. BU

TA002 000

2-13

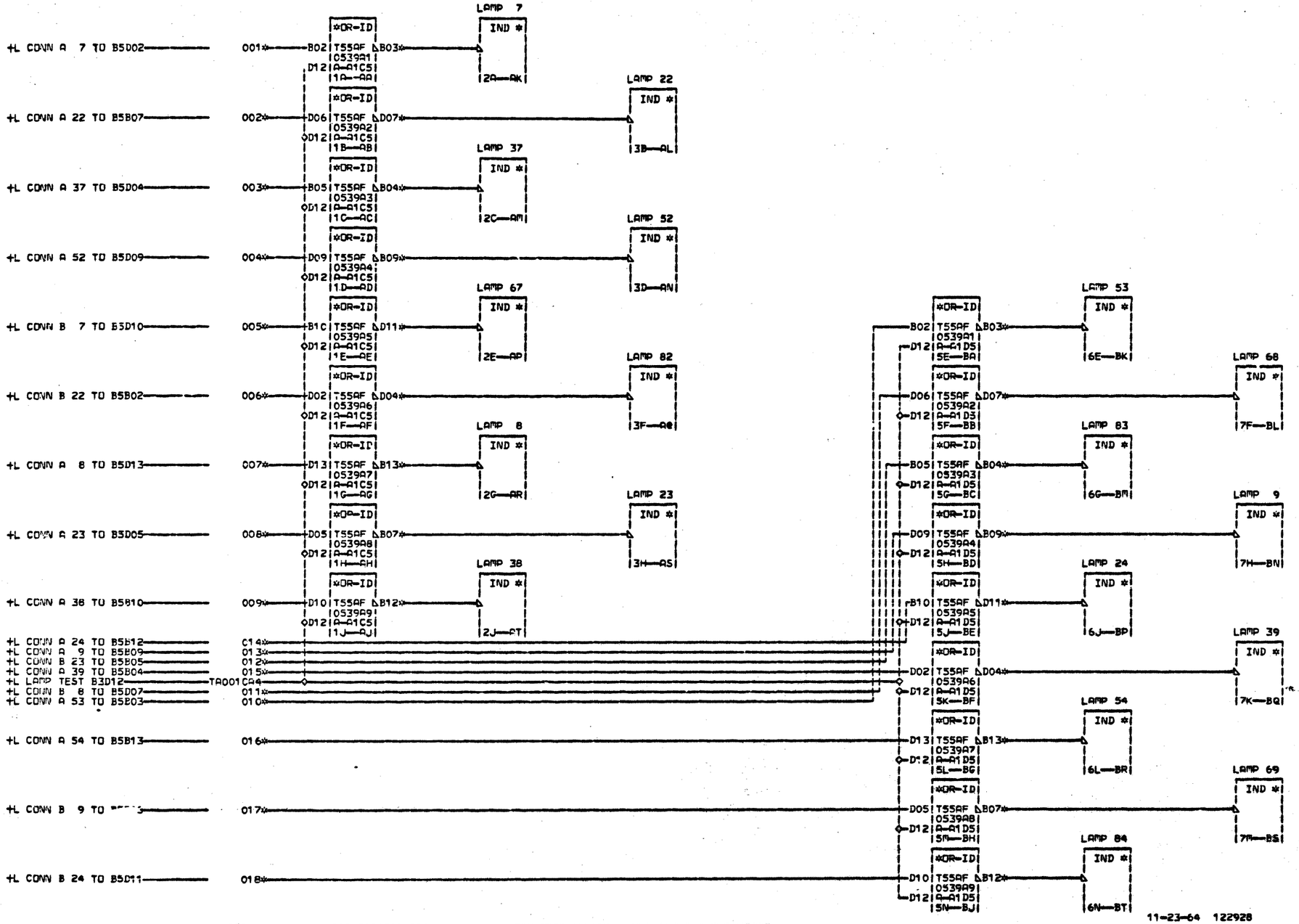

001	01A-A1B5D10	010	01A-A1B5B12	BA4	A-A1E5D02	BB4	A-A1E5B03	
01A-A1B5D02	006	01A-A1B5B03	015	CB4	A-A1E5B08	BB4	A-A1E5B07	
002	01A-A1B5B02	011	01A-A1B5B04	AC4	A-A1E5B02	BC4	A-A1E5D04	
01A-A1B5B07	007	01A-A1B5D07	016	AD4	A-A1E5D09	BD4	A-A1E5B09	
003	01A-A1B5D13	012	01A-A1B5B13	AE4	A-A1E5D10	BE4	A-A1E5D11	
01A-A1B5D04	008	01A-A1B5B05	017	AF4	A-A1E5B05	BF4	A-A1E5B04	
004	01A-A1B5D05	013	01A-A1B5D06	AG4	A-A1E5D13	BG4	A-A1E5B13	
01A-A1B5D09	009	01A-A1B5B09	018	AH4	A-A1E5D06	BH4	A-A1E5D07	
005	01A-A1B5B10	014	01A-A1B5D11	AJ4	A-A1E5D12	BJ4	A-A1E5B12	

T A 0 0 3 000

CENTER BANK OF THREE COLUMNS OF LAMPS.	T A 0 0 3 000
DATE 11-24-64 MACH. IOTESTER	
LOG 2476 FRAME 01	
T M MCADON P.N. 740467	
IBM CORP. GPD BLK. BU	

2-3

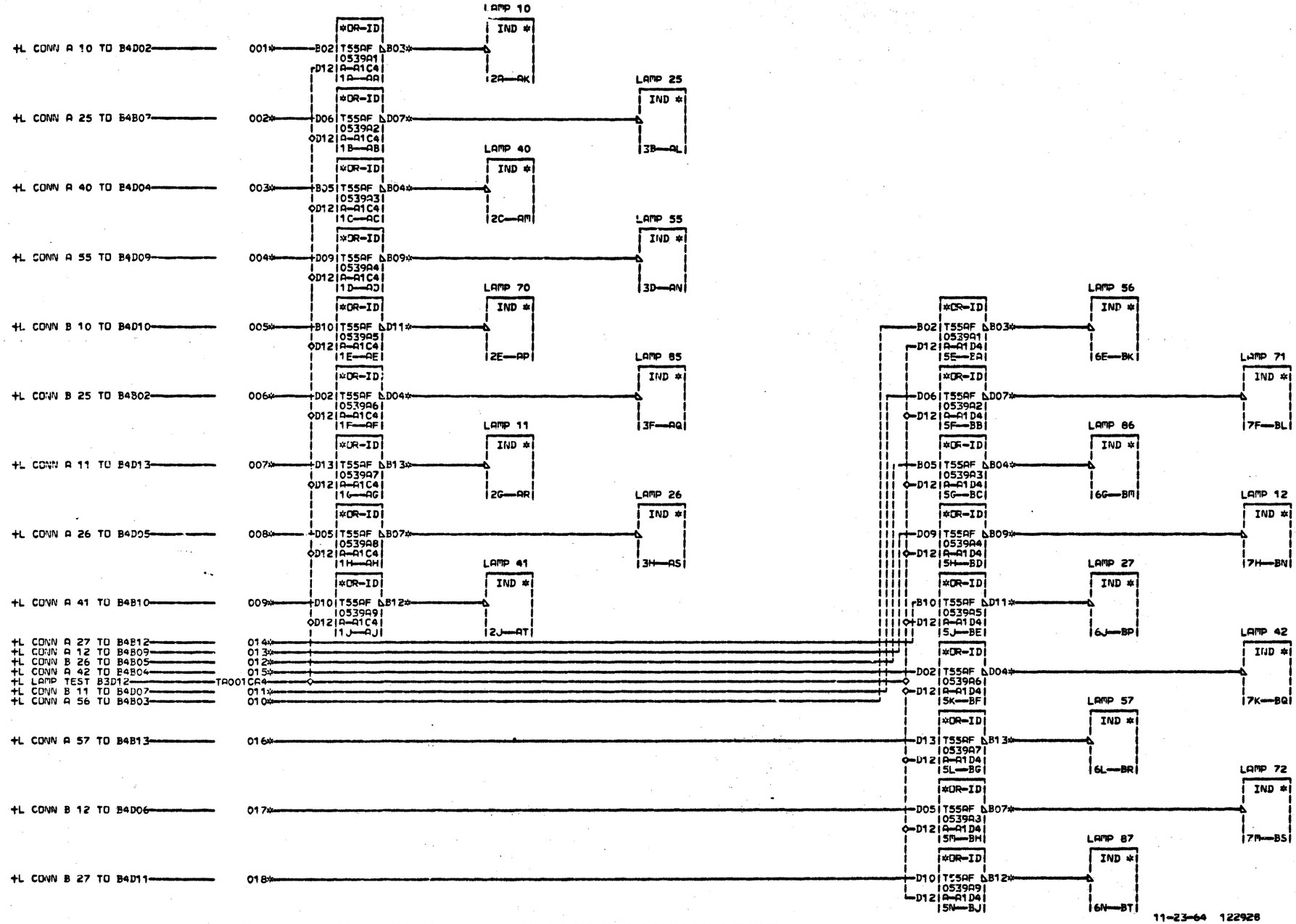

11-23-64 122928

001	01A-A1B4D10	010	01A-A1B4B12	AA4	A-A1E4D02	BA4	A-A1E4B03
	01A-A1B4D02	006	01A-A1B4B03	015		AB4	A-A1E4B08	BB4	A-A1E4B07
002	01A-A1B4B02	011	01A-A1B4B04	AC4	A-A1E4B02	BC4	A-A1E4D04
	01A-A1B4B07	007	01A-A1B4D07	016		AD4	A-A1E4D09	BD4	A-A1E4B09
003	01A-A1B4D13	012	01A-A1B4B13	AE4	A-A1E4D10	BE4	A-A1E4D11
	01A-A1B4D04	008	01A-A1B4B05	017		AF4	A-A1E4B05	BF4	A-A1E4B04
004	01A-A1B4D05	013	01A-A1B4D06	AG4	A-A1E4D13	BG4	A-A1E4B13
	01A-A1B4D09	009	01A-A1B4B09	018		AH4	A-A1E4D06	BH4	A-A1E4D07
005	01A-A1B4B10	014	01A-A1B4D11	AJ4	A-A1E4D12	BJ4	A-A1E4B12

TA004 000

CENTER RIGHT BANK OF THREE COLUMNS OF LAMPS.
DATE 11-24-64 MACH. IDTESTER
LOG 2476 FRAME 01
T M MCADON P.N. 740468
IBM CORP. GPD BLK. BU

TA004 000

Z-3

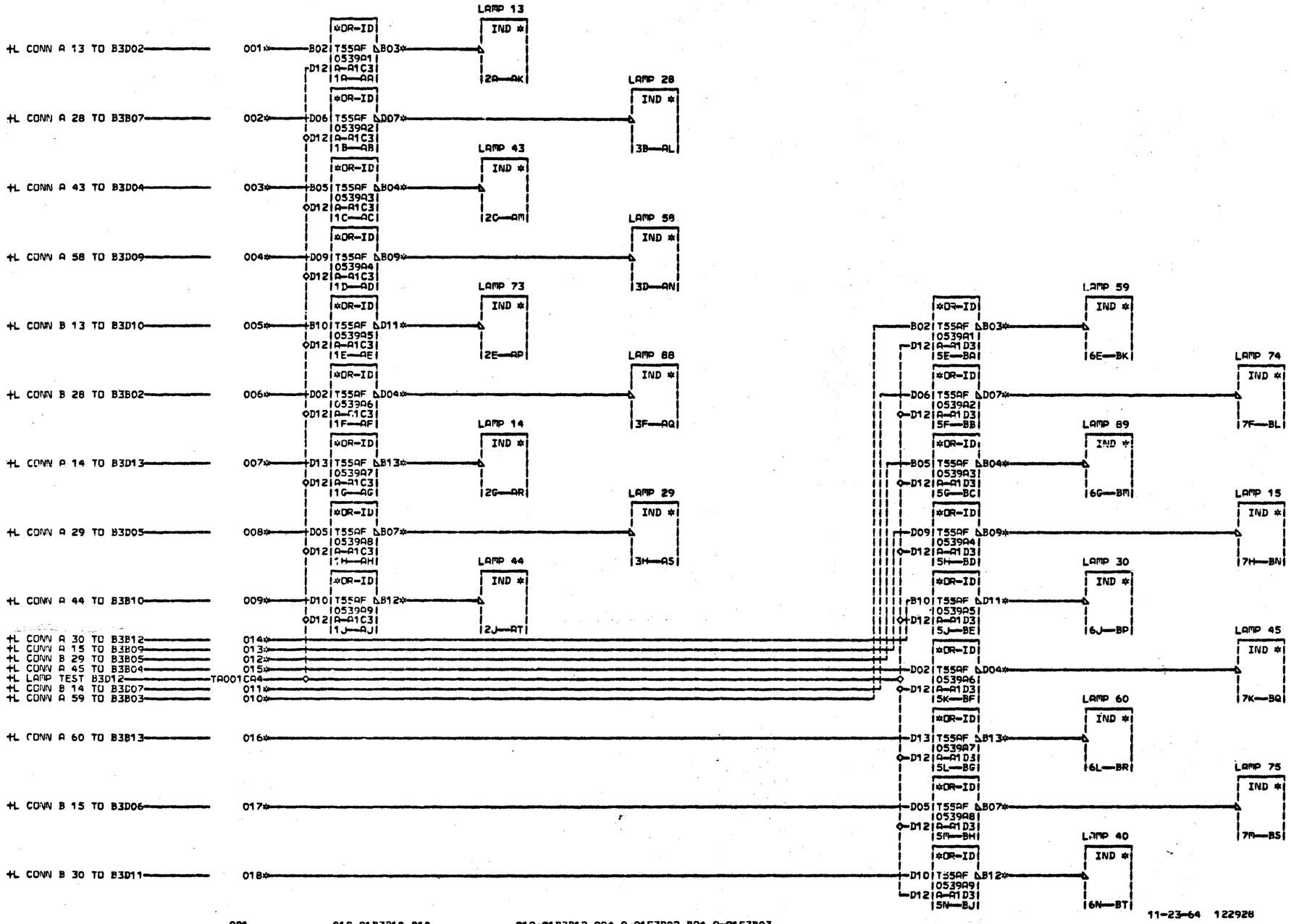

11-23-64 122928

001	01A-A1B3D10	010	01A-A1B3B12	AA4	A-A1E3D02	BA4	A-A1E3B03
01A-A1B3D02	006	01A-A1B3B03	015	AB4	A-A1E3B08	BB4	A-A1E3B07
002	01A-A1B3B02	011	01A-A1B3B04	AC4	A-A1E3B02	BC4	A-A1E3D04
01A-A1B3R07	007	01A-A1B3D07	016	AD4	A-A1E3D09	BD4	A-A1E3B09
003	01A-A1B3D13	012	01A-A1B3B13	AE4	A-A1E3D10	BE4	A-A1E3D11
01A-A1B3D04	008	01A-A1B3B05	017	AF4	A-A1E3B05	BF4	A-A1E3B04
004	01A-A1B3D05	013	01A-A1B3D06	AG4	A-A1E3D13	BG4	A-A1E3B13
01A-A1B3D09	009	01A-A1B3B09	018	AH4	A-A1E3D06	BH4	A-A1E3D07
005	01A-A1B3B10	014	01A-A1B3D11	AJ4	A-A1E3D12	BJ4	A-A1E3B12

TA005 000

EXTREME RIGHT BANK OF THREE CULUMNS OF LAMPS.
DATE 11-24-64 MACH. IUTESTER
LOG 2476 FRAME 01
T M MCADON P.No. 740469
IBM CORP. GPD BLK. BU

B3	CONN	
	TA001CA4	D12
	TA005006	B02
	TA005010	B03
	TA005015	B04
	TA005012	B05
	TA005002	B07
	TA005013	B09
	TA005009	B10
	TA005014	B12
	TA005016	B13
	TA005001	D02
	TA005003	D04
	TA005008	D05
	TA005017	D06
	TA005011	D07
	TA005004	D09
	TA005005	D10
	TA005018	D11
	TA005007	D13
B4	CONN	
	TA004006	B02
	TA004010	B03
	TA004015	B04
	TA004012	B05
	TA004002	B07
	TA004013	B09
	TA004009	B10
	TA004014	B12
	TA004016	B13
	TA004001	D02
	TA004003	D04
	TA004008	D05
	TA004017	D06
	TA004011	D07
	TA004004	D09
	TA004005	D10
	TA004018	D11
	TA004007	D13
B5	CONN	
	TA003006	B02
	TA003010	B03
	TA003015	B04
	TA003012	B05
	TA003002	B07
	TA003013	B09
	TA003009	B10
	TA003014	B12
	TA003016	B13
	TA003001	D02
	TA003003	D04
	TA003008	D05
	TA003017	D06
	TA003011	D07
	TA003004	D09
	TA003005	D10
	TA003018	D11
	TA003007	D13
B6	CONN	
	TA002006	B02
	TA002010	B03
	TA002015	B04
	TA002012	B05
	TA002002	B07
	TA002013	B09
	TA002009	B10
	TA002014	B12
	TA002016	B13
	TA002001	D02
	TA002003	D04
	TA002008	D05
	TA002017	D06
	TA002011	D07
	TA002004	D09
	TA002005	D10
	TA002018	D11
	TA002007	D13
B7	CONN	
	TA001006	B02
	TA001010	B03
	TA001015	B04
	TA001012	B05
	TA001002	B07
	TA001013	B09
	TA001009	B10
	TA001014	B12
	TA001016	B13
	TA001001	D02
	TA001003	D04
	TA001008	D05
	TA001017	D06
	TA001011	D07
	TA001004	D09
	TA001005	D10
	TA001018	D11
	TA001007	D13

TA0006

C3	5800539		SINGLE	0539		
	TA005	AA	AB	AC	AD	AE
		AF	AG	AH	AJ	
C4	5800539		SINGLE	0539		
	TA004	AA	AB	AC	AD	AE
		AF	AG	AH	AJ	
C5	5800539		SINGLE	0539		
	TA003	AA	AB	AC	AD	AE
		AF	AG	AH	AJ	
C6	5800539		SINGLE	0539		
	TA002	AA	AB	AC	AD	AE
		AF	AG	AH	AJ	
C7	5800539		SINGLE	0539		
	TA001	AA	AB	AC	AD	AE
		AF	AG	AH	AJ	
D3	5800539		SINGLE	0539		
	TA005	BA	BB	BC	BD	BE
		BF	BG	BH	BJ	
D4	5800539		SINGLE	0539		
	TA004	BA	BB	BC	BD	BE
		BF	BG	BH	BJ	
D5	5800539		SINGLE	0539		
	TA003	BA	BB	BC	BD	BE
		BF	BG	BH	BJ	
D6	5800539		SINGLE	0539		
	TA002	BA	BB	BC	BD	BE
		BF	BG	BH	BJ	
D7	5800539		SINGLE	0539		
	TA001	BA	BB	BC	BD	BE
		BF	BG	BH	BJ	

E3	CONN	
	TA005AA4	D02
	TA005AB4	B08
	TA005AC4	B02
	TA005AD4	D09
	TA005AE4	D10
	TA005AF4	B05
	TA005AG4	D13
	TA005AH4	D06
	TA005AJ4	D12
	TA005BA4	B03
	TA005BB4	B07
	TA005BC4	D04
	TA005BD4	B09
	TA005BE4	D11
	TA005BF4	B04
	TA005BG4	B13
	TA005BH4	D07
	TA005BJ4	B12
E4	CONN	
	TA004AA4	D02
	TA004AB4	B08
	TA004AC4	B02
	TA004AD4	D09
	TA004AE4	D10
	TA004AF4	B05
	TA004AG4	D13
	TA004AH4	D06
	TA004AJ4	D12
	TA004BA4	B03
	TA004BB4	B07
	TA004BC4	D04
	TA004BD4	B09
	TA004BE4	D11
	TA004BF4	B04
	TA004BG4	B13
	TA004BH4	D07
	TA004BJ4	B12
E5	CONN	
	TA003AA4	D02
	TA003AB4	B08
	TA003AC4	B02
	TA003AD4	D09
	TA003AE4	D10
	TA003AF4	B05
	TA003AG4	D13
	TA003AH4	D06
	TA003AJ4	D12
	TA003BA4	B03
	TA003BB4	B07
	TA003BC4	D04
	TA003BD4	B09
	TA003BE4	D11
	TA003BF4	B04
	TA003BG4	B13
	TA003BH4	D07
	TA003BJ4	B12

E6	CONN	
	TA002AA4	D02
	TA002AB4	B08
	TA002AC4	B02
	TA002AD4	D09
	TA002AE4	D10
	TA002AF4	B05
	TA002AG4	D13
	TA002AH4	D06
	TA002AJ4	D12
	TA002BA4	B03
	TA002BB4	B07
	TA002BC4	D04
	TA002BD4	B09
	TA002BE4	D11
	TA002BF4	B04
	TA002BG4	B13
	TA002BH4	D07
	TA002BJ4	B12
E7	CONN	
	TA001AA4	D02
	TA001AB4	B08
	TA001AC4	B02
	TA001AD4	D09
	TA001AE4	D10
	TA001AF4	B05
	TA001AG4	D13
	TA001AH4	D06
	TA001AJ4	D12
	TA001BA4	B03
	TA001BB4	B07
	TA001BC4	D04
	TA001BD4	B09
	TA001BE4	D11
	TA001BF4	B04
	TA001BG4	B13
	TA001BH4	D07
	TA001BJ4	B12

PLUG LIST

5800539	0539	C3	C4	C5
		C6	C7	D3
		D4	D5	D6
		D7		
CONN	CONN	B3	B4	B5
		B6	B7	E3
		E4	E5	E6
		E7		

SOCKET LISTING
DATE 11-25-64 MACH. IOTESTER

LOG 247600 BOARD 01A-01
PREV. ENGR. CHG. 11-17-64 122928
PRES. ENGR. CHG. 11-23-64 122928
P.N. 740470

IBM CORP. GPD BLK.

TA0000

DESCRIPTION:

THE I/O TESTER IS A PORTABLE C.E. TOOL WHICH MAY BE ATTACHED VIA EITHER ONE OR TWO QUICK DISCONNECT CONNECTORS TO MANY OF THE I/O UNITS OF THE SYSTEM/360. I/O UNITS PRESENTLY USING THE I/O TESTER ARE THE 1016, 2030-1050 ATTACHMENT, 1442,1443,2501,2520,2671,2701 AND THE 2821.

A THE TESTER PROVIDES A MEANS OF CONVEYING OPERATIONAL INFORMATION ABOUT AN I/O UNIT TO THE C.E. THROUGH 90 INDICATOR LAMPS WHICH ARE HOUSED ALONG WITH INDICATOR DRIVERS IN THE I/O TESTER. THE TESTER MAY BE CONNECTED TO THE I/O UNIT EITHER ON-LINE OR OFF-LINE. THE INDICATORS ARE OPERATIONAL IN EITHER CASE. A ROTARY MODE SWITCH AND 14 CONTROL SWITCHES MAY BE ASSIGNED CONTROL FUNCTIONS BY THE I/O UNIT TO ACHIEVE A SEMI-PSUEDO OR ACTUAL OFF-LINE MODE OF OPERATION TO EXERCISE THE VARIOUS FUNCTIONS REQUIRED. PLASTIC OVERLAYS, WHICH ARE STORED IN THE TESTER AND ARE IDENTIFIED BY MACHINE TYPE, ARE USED TO IDENTIFY THE FUNCTION ASSIGNED TO THE PARTICULAR LAMPS AND SWITCHES USED ON THAT I/O UNIT. THE BOTTOM MARGIN OF THE OVERLAY IS USED TO IDENTIFY THE FUNCTION ASSIGNED EACH SWITCH IN THE TOP ROW. THE BOTTOM ROW OF SWITCHES ARE IDENTIFIED PERMANENTLY. NOT ALL OF THE I/O UNITS USE ALL OF THE SWITCHES IN THE BOTTOM ROW. A

B DETAILS COVERING THE OPERATION OF THE I/O TESTER WITH EACH I/O UNIT ARE CONTAINED IN THE REFERENCE MANUAL FOR THAT I/O UNIT. B

APPLICATION:

THE I/O TESTER WILL BE CAPABLE OF BEING PLUGGED OR UNPLUGGED FROM THE I/O UNITS WITHOUT DROPPING POWER IN THE I/O UNIT. THE I/O UNIT CONTROL LINES WILL ASSUME AN OFF STATE WHEN THE I/O TESTER IS DISCONNECTED. IN ADDITION TO THIS, ANY CONTROLS THAT COULD RESULT IN MECHANICAL ACTION WILL BE GATED WITH A MOMENTARY CONTACT, SELF RESTORING OFF, SWITCH. THIS WILL INSURE AN OFF STATUS WHEN THE TESTER IS BEING PLUGGED WITH I/O UNIT POWER ON.

C AN I/O TESTER DESIGN PHILOSOPHY WHICH MINIMIZES THE NECESSITY FOR C.E. SETUP IN APPLYING THE I/O TESTER HAS BEEN IMPLEMENTED. THIS IS ACCOMPLISHED BY PERFORMING ALL SWITCHING OF POWER SUPPLY AND TESTER COMPONENTS IN THE I/O UNIT. C

THE C.E., HOWEVER, MUST SELECT AND INSTALL THE PROPER OVERLAY FOR THE I/O UNIT BEING SERVICED AND SHOULD INSURE THAT ALL SWITCHES ARE OFF PRIOR TO PLUGGING THE TESTER. THE G.P.D. STANDARD OF TOGGLE SWITCH DOWN BEING OFF IS ADHERED TO IN THE I/O TESTER.

FUNCTIONAL UNITS:

1. POWER SUPPLY:

D REFER TO LOGIC TA008 - POWER SUPPLY SERVICING FLOW CHART D
REFER TO LOGIC TA009 - POWER SUPPLY CIRCUIT DIAGRAM

A. THE INPUT TO THE POWER SUPPLY IS 24 VOLTS RMS PLUS/MINUS 10% A.C. THE POWER SUPPLY IS DESIGNED TO OPERATE ON EITHER 50 OR 60 CYCLES. A LONG TIME LAG FUSE RATED AT 1.5 AMPERES IS IN THE PRIMARY CIRCUIT.

THE POWER SUPPLY TRANSFORMER HAS TWO CENTER -TAPPED SECONDARY WINDINGS. THE SMALLER OF THESE WINDINGS PROVIDES 20 VOLTS PEAK PER SIDE FOR USE IN THE LAMP TEST FEATURE ONLY. TWO TYPE AM DIODES LOCATED ON THE REGULATOR CONTROL CARD ARE USED TO RECTIFY THE TRANSFORMER OUTPUT INTO A 20 VOLTS PEAK PULSATING CURRENT. THE PLUS 20 VOLTS P.C. BROUGHT OUT ON TB-5 IS CABLED TO THE N/O SIDE OF THE LAMP TEST SWITCH. THE MINUS 20 VOLTS P.C. BROUGHT OUT ON
E TB-6 IS CABLED TO THE N/C SIDE OF THE LAMP TEST SWITCH AND THEN TO THE EMITTER COMMON VIA E
PIN B4D08 ON THE LARGE CARD.

THE LARGER OF THE WINDINGS ON THE TRANSFORMER PROVIDES APPROXIMATELY 7 VOLTS PER SIDE WHICH IS RECTIFIED BY THE POWER DIODES CR1 AND CR2 MOUNTED ON THE CENTER BRACKET. THE RECTIFIED OUTPUT IS FILTERED BY CAPACITOR C1 OF 15000 MICROFARADS CAPACITY. A 390 OHM 2 WATT BLEEDER RESISTOR IS MOUNTED ACROSS C1. THE SERIES REGULATOR SECTION OF THE SUPPLY CONTAINS RESISTOR R2 OF 0.1 OHM 5 WATTS, SERIES REGULATOR POWER TRANSISTOR Q1, A TYPE 108, POWER CONTROL TRANSISTOR Q2, A TYPE 119, AND A POTENTIOMETER R3 TO PROVIDE ADJUSTMENT OF THE 3.0 VOLTS D.C. OUTPUT. THE SMS CARD CONTAINS THE REGULATOR CONTROLS IN ADDITION TO THE 2 AM DIODES USED IN THE 20 VOLT P.C. RECTIFIER FOR THE LAMP TEST CIRCUIT.

F THE OUTPUT OF THE SERIES REGULATOR IS 3.0 VOLTS D.C. USED FOR THE INDICATOR DRIVERS. THE PLUS 3.0 VOLTS ON TB-3 TERMINATES ON AMP CONNECTOR A-84. THE MINUS 3.0 VOLTS ON TB-4 TERMINATES ON AMP CONNECTOR A-98. F

THE 24 VOLTS A.C. IS TRANSMITTED INTO THE I/O TESTER WITH A SHIELDED PAIR. CONNECTOR A PINS 80 AND 82 TRANSMIT THE 24 V A.C. TO TB-1 AND TB-2. THE SHIELD RUNS FROM PIN A-81 TO THE UPPER RIGHT HOLD DOWN SCREW ON THE POWER SUPPLY. THIS PROVIDES THE CONTINUITY OR FRAME GROUND BETWEEN THE I/O MACHINE AND THE I/O TESTER.

B. SERVICING THE POWER SUPPLY:

G REMOVE THE REAR COVER BY UNLOCKING THE TWO CAPTIVE SCREWS AND PIVOTING THE COVER DOWN. THE COVER CAN BE REMOVED FROM THE PINS WHEN IT IS HORIZONTAL. G

REFER TO LOGIC TA008 - POWER SUPPLY SERVICING FLOW CHART.
REFER TO LOGIC TA009 - POWER SUPPLY CIRCUIT DIAGRAM.

2. INDICATOR LAMPS:

IMMEDIATELY FOLLOWING THE CONNECTION OF THE I/O TESTER TO AN I/O UNIT FOR EITHER ON-LINE OR OFF-LINE SERVICING A LAMP TEST SHOULD BE PERFORMED. LAMP TESTING TURNS ON THE INDICATOR DRIVERS AS WELL AS THE LAMPS. REPLACE ANY LAMPS THAT FAIL TO GLOW ON LAMP TEST. THE INDICATOR LAMP IS REMOVABLE FROM THE FRONT. KEYS ARE MOULDED IN THE PLASTIC LENS CAP TO
H INSURE THAT THE PINS ON THE LAMP BASE LINE UP WITH THE CONTACTS IN THE LAMP HOLDER. ALIGN H
THE KEYS IN THE LAMP TO THE GROOVES IN THE LAMP HOLDER WHEN INSERTING THE LAMP. IF A REPLACEMENT PART IS NOT AVAILABLE, RELOCATE A GOOD LAMP FROM A POSITION THAT IS NOT ASSIGNED ON THE OVERLAY FOR THE PARTICULAR DEVICE BEING SERVICED. IF LAMP REPLACEMENT FAILS TO ALLOW A COMPLETE LAMP TEST, REFER TO LOGICS TA001 THRU TA006 TO DETERMINE THE LARGE BOARD CARD LOCATION FOR THE INDICATOR DRIVER. SWAPPING OF INDICATOR DRIVERS WILL ALLOW IDENTIFICATION OF A FAILING INDICATOR DRIVER. A LAMP TEST PERFORMED WITH THE CARD REMOVED WILL IDENTIFY THE LAMPS ASSOCIATED WITH EACH DRIVER CARD.

3. OPERATING SWITCHES:

REFER TO LOGIC TA007 FOR I/O TESTER TOGGLE AND ROTARY SWITCHES.

J A. TOGGLE SWITCHES: J

THE TOGGLE SWITCHES IN THE I/O TESTER ARE GOLD-CONTACT, QUICK BREAK SWITCHES. THEY ARE CONNECTED WITH FAST-ON CLIPS TO EASE SWITCH REPLACEMENT.

B. THE ROTARY SWITCH IS A DOUBLE DECK, 5 POSITION, NON-SHORTING OR BREAK BEFORE MAKE SWITCH. LEADS TOTHIS SWITCH ARE SOLDERED IN PLACE.

IF SWITCH FAILURE IS SUSPECTED, THE SWITCH AND CABLING CAN BE CONTINUITY TESTED WITH THE OHM-METER. REMOVE THE CONNECTORS TO GAIN ACCESS TO THE PINS AND REFER TO LOGIC TA007 TO

DETERMINE THE CONNECTOR PINS ASSOCIATED WITH EACH.

4. SLT CARDS:

A. INDICATOR DRIVER CARDS P/N 5800539:

REFER TO THE CIRCUIT FLYER AND LOGICS TA001 THRU TA006.

AS INDICATED UNDER INDICATOR LAMPS, THE LAMP TEST SWITCH WILL CHECK THAT THE INDICATOR DRIVER TRANSISTOR IS OPERABLE. REFER TO CIRCUIT FLYER PAGE 3 INDICATOR DRIVER CIRCUIT SCHEMATIC. THE LAMP TEST SWITCH WHEN OPERATED CAUSES PLUS 12 VOLTS FROM AMP PIN 99 OR PLUS 20 VOLTS P.C. FROM THE POWER SUPPLY TO FORWARD BIAS THE BASE OF THE INDICATOR DRIVERS THRU THE 10K RESISTOR. HOWEVER, AN INDICATOR DRIVER CARD THAT WILL PERFORM THE LAMP TEST COULD STILL FAIL BY HAVING AN OPEN INPUT LAND, OR CARD CONTACT, OR OPEN 2K INPUT RESISTOR. FAULT LOCATION FOR THE INDICATOR DRIVERS IS BEST PERFORMED BY CARD SWAPPING. INSERT SLT CARDS GENTLY TO MINIMIZE EXPOSURE TO DAMAGING THE CARD CONTACTS.

5. THE HALF-BOARD OR LARGE CARD:

REFER TO LOGICS TA001 THRU TA006.

INDICATOR DRIVER CARDS ARE PLUGGED IN BOARD LOCATIONS C3,C4,C5,C6,C7,D3,D4,D5,D6 AND D7. LAMP CABLE ASSEMBLIES ARE PLUGGED VIA A CABLE CARD INTO LARGE CARD LOCATIONS E3,E4,E5,E6 AND E7. INPUT CABLE CARD ASSEMBLIES ARE PLUGGED INTO LARGE CARD LOCATIONS B3,B4,B5,B6 AND B7.

THE CONNECTIONS WHICH ARE LAND PATTERNS ON THE LARGE CARD IN SECTIONS 3,4,5,6 AND 7 ARE IDENTICAL SO THAT, IF NECESSARY FOR FAULT LOCATION, THE INPUT CABLE CARDS IN LOCATIONS B4,B5, B6 AND B7 CAN BE SWAPPED. THIS WILL CAUSE THE 3 VERTICAL COLUMNS OF INDICATION ASSOCIATED WITH THE INPUT CABLE TO CHANGE LOCATION IN THE DISPLAY A DISTANCE OF 3 IN THE DIRECTION THAT THE INPUT CABLE CARD IS MOVED. CABLE CARD B3 CANNOT BE SWAPPED SINCE THE LAMP RETURN AND LAMP TEST NETS TERMINATE ON THIS CABLE CARD. THE OUTPUT CABLE CARDS TO THE LAMPS IN LOCATIONS E3,E4,E5,E6 AND E7 CAN BE SWAPPED IN THE SAME MANNER FOR FAULT LOCATION. THE VERTICAL LAND PATTERN IS LOCATED ON THE CARD SIDE OF THE LARGE CARD. THE HORIZONTAL LAND PATTERN IS ON THE WIRING SIDE OF THE LARGE CARD. THE MAJORITY OF LAND PATTERN IS IN THE VERTICAL DIRECTION AND IS VISIBLE FROM THE CARD SIDE. POINT TO POINT CONTINUITY CHECKING OF THE LARGE CARD CAN BE PERFORMED ON THE CARD SIDE.

REMOVAL OF THE LARGE CARD ASSEMBLY MAY BE REQUIRED TO,
1. REPLACE OR REPAIR A LAMP HOLDER OR LAMP CONTACT
2. WIRE WRAP ON THE LARGE CARD BECAUSE OF BLOWN LAND PATTERN OR TO INSTALL AN ENGINEERING CHANGE.

LARGE CARD REMOVAL PROCEDURE IS AS FOLLOWS:
1. REMOVE REAR COVER
2. REMOVE THE POWER SUPPLY
3. UNPLUG INPUT CABLE CARDS ROW B
4. UNPLUG LAMP CABLE CARDS ROW E
5. REMOVE TWO SCREWS SECURING LARGE CARD TO BOX
6. SLOWLY LOWER THE LARGE CARD WHILE HOLDING THE LAMP CABLE CARDS AWAY AND REMOVE THE LARGE CARD

6. 104 POSITION AMP - INSERT PIN AND SOCKET CONNECTORS:

TWO AMP CONNECTORS ARE USED TO CONNECT THE I/O TESTER. THE CONNECTOR LABELED A IS FULLY POPULATED WITH CONTACTS. THE CONNECTOR LABELED B IS PARTIALLY POPULATED WITH CONTACTS. THE MATING RECEPTACLES IN THE I/O UNITS WILL BEAR A MATCHING LABEL. SEVERAL OF THE I/O UNITS TO WHICH THE I/O TESTER CAN BE ATTACHED USE ONLY CONNECTOR A. THESE ARE THE 1442,1443, 1016 AND 2030-1050 ATTACHMENT. WHEN SERVICING THESE UNITS CONNECTOR B CAN REMAIN IN THE CABLE STORAGE LOCATION IN THE BOTTOM OF THE TESTER.

AN EXTRACTION TOOL AMP P/N 305183, IBM P/N 2108398, IS USED TO REMOVE EITHER THE PIN OR THE SOCKET. THE BARREL OF THE REMOVAL TOOL IS BOTTOMED IN THE HOLE FROM THE CONTACT SIDE TO COMPRESS THE LATCH SPRINGS, THEN THE PLUNGER IS DEPRESSED TO PUSH OUT THE PIN OR SOCKET.

WHEN ATTACHING THE CONNECTORS, THE END FOR END ALIGNMENT IS CORRECT WHEN THE CABLE CLAMP ON THE CONNECTOR IS ON THE OPPOSITE SIDE OF THE FLAT ON THE FEMALE JACKSCREW ON THE RECEPTACLE. CORNER GUIDE PINS AND SOCKETS ARE ARRANGED TO PRESENT AN INTERFERENCE TO COMPLETING THE CONNECTION IF CONNECTOR A IS PLACED IN RECEPTACLE B AND VICE-VERSA.

SWITCH NUMBERS AND PHYSICAL LOCATION:

91	92	93	94	95	96	97	98	99	100	101	102	103	104	105
106 START	107 STOP	108 RESET	109 LAMP TEST	ROTARY	110 DATA ENTER	111 P	112 0	113 1	114 DATA 2	115 ENTRY 3	116 4	117 5	118 6	119 7

ROTARY SWITCH # 95 SECTION 1 CONN A-91 # 95 SECTION 2 SEC. 1 COMMON TOGGLE SWITCHES	COMMON	POS.# 1 OFF	POS.# 2 CONN A-93	POS.# 3 CONN A-94	POS.# 4 CONN A-95	POS.# 5 CON A-96 CON A-92
	COMMON		NORMALLY CLOSED		NORMALLY OPEN	
# 91 MOMENTARY	CONN. A- 83		CONN. A- 61		CONN. A- 62	
# 92 MOMENTARY	CONN. A- 83		CONN. B- 75		CONN. A- 64	
# 93 MAINTAINED	CONN. A- 83		CONN. B- 77		CONN. A- 65	
# 94 MAINTAINED	CONN. A- 83		CONN. B- 79		CONN. A- 66	
# 96 MAINTAINED	CONN. A- 83		CONN. B- 80		CONN. A- 67	
# 97 MAINTAINED	CONN. A- 83		CONN. A- 63		CONN. A- 68	
# 98 MAINTAINED	CONN. A- 83		CONN. B- 82		CONN. A- 78	
# 99 MAINTAINED	CONN. A- 83		CONN. B- 83		CONN. A- 79	
# 100 MAINTAINED	CONN. A-104		CONN. B- 84		CONN. B- 85	
# 101 MAINTAINED	CONN. A-104		CONN. B- 86		CONN. B- 87	
# 102 MAINTAINED	CONN. A-104		CONN. B- 88		CONN. B- 89	
# 103 MAINTAINED	CONN. A-104		CONN. B- 90		CONN. B- 91	
# 104 MAINTAINED	CONN. A-104		CONN. B- 92		CONN. B- 93	
# 105 MAINTAINED	CONN. A-104		CONN. B- 94		CONN. A- 97	
# 106 START MOM.	CONN. A- 83		CONN. A- 90		CONN. A- 87	
# 107 STOP MOM.	CONN. A- 83		CONN. B- 76		CONN. A- 88	
# 108 RESET MOM.	CONN. A- 83		CONN. B- 78		CONN. A- 89	
# 109 LAMP TEST MOM.	LARGE CD. B3D12		EMITTER COM B4D08 POW SUP TB-6 -20V		CONN. A- 99 POW SUP TB-5 PL 20 V	

DATE	EC NO	DATE	EC NO	DATE	EC NO
1-11-65	122928				
270CT65	125579A				

TOGGLE SWITCHES	COMMON	NORMALLY CLOSED	NORMALLY OPEN
# 110 DATA ENTER MOM.	CONN. A-100	CONN. A-101	CONN. A-102
# 111 BIT P MAINT.	CONN. A- 85	CONN. B- 96	CONN. A- 69
# 112 BIT 0 MAINT.	CONN. A- 85	CONN. B- 97	CONN. A- 70
# 113 BIT 1 MAINT.	CONN. A- 85	CONN. B- 98	CONN. A- 71
# 114 BIT 2 MAINT.	CONN. A- 85	CONN. B- 99	CONN. A- 72
# 115 BIT 3 MAINT.	CONN. A- 85	CONN. B-100	CONN. A- 73
# 116 BIT 4 MAINT.	CONN. A- 85	CONN. B-101	CONN. A- 74
# 117 BIT 5 MAINT.	CONN. A- 85	CONN. B-102	CONN. A- 75
# 118 BIT 6 MAINT.	CONN. A- 85	CONN. B-103	CONN. A- 76
# 119 BIT 7 MAINT.	CONN. A- 85	CONN. B-104	CONN. A- 77

DATE	EC NO	DATE	EC NO	DATE	EC NO
1-11-65	122928				
27 OCT 65	125579A				

I/O TESTER POWER SUPPLY MAINTENANCE ASSISTANCE DIAGRAM

IS THE POWER SUPPLY IN THE I/O TESTER USED ON THIS I/O UNIT?

NO → NO FOR THE 2030-1050 ATTACHMENT

YES → YES FOR 1016, 1442-N1 1443-N1, 2501, 2520 2671, 2701 AND 2821

REFER TO LOGIC TA009 I/O TESTER POWER SUPPLY DIAGRAM. REMOVE THE REAR COVER AND TEST FOR 24 VOLTS RMS A.C. ±10% ON TB-1 AND TB-2.

IS 24 VOLTS A.C. PRESENT ?

NO → REMOVE CONNECTOR A CHECK FOR 24 VOLTS RMS A.C. ±10% ON I/O UNIT PINS A-80 AND A-82

IS 24 VOLTS A.C. PRESENT ?

NO → TROUBLE IS IN I/O UNIT

YES → CHECK CONTINUITY FROM A-80 TO TB-1 AND A-82 TO TB-2

YES → IS 3 VOLTS D.C. PRESENT ON TB-3(+) AND TB-4(-)?

NO → TURN ON THE LAMP TEST SW. TO ESTABLISH A CONSTANT LOAD WHEN MEASURING THE FOLLOWING VOLTAGES

IS 0 VOLTS PRESENT ON TB-3(+) AND TB-4(-)?

YES → CHECK FUSE ON P.S.

IS FUSE OK?

NO → REPLACE FUSE.

YES → REMOVE REGULATOR CONTROL CARD (SMS) AND TURN ON LAMP TEST SWITCH.

VDC ON TB-3(+) AND TB-4(-)?

0V → CHECK FOR OPEN TRANS. Q1 A TYPE 108, OPEN R2, OPEN TRANS. Q2 A TYPE 119, BOTH DIODES CR-1 AND CR-2 OPEN, OR BREAK IN WIRE.

1.0-1.5V → REPLACE (SMS) REGULATOR CONTROL CARD

NO → IS 3 VOLTS D.C. PRESENT ON TB-3(+) AND TB-4(-)?

YES → MOVE(+) LEAD TO B3B11 ON CABLE CARD B3

IS 3 VOLTS D.C. ?

NO → CHECK CONTINUITY FROM TB-3 TO B3B11. SEE LOGIC TA009

YES → MOVE(-) LEAD TO B3D08 ON CABLE CARD B3

IS 3 VOLTS DC

NO → CHECK CONTINUITY FROM TB-4 TO B3D08. SEE LOGIC TA009

YES → (1)

V D.C. ON TB-3(+) AND TB-4(-) ?

0.5-2.0V → REPLACE (SMS) REGULATOR CONTROL CARD

8.0V-12.0V → CHECK FOR GROUND ON HEAT SINK OR ON TERMINALS TB-1 THRU TB-6

4-6V → REMOVE REGULATOR CONTROL CARD (SMS) AND TURN ON LAMP TEST SWITCH

VDC ON TB-3(+) AND TB-4(-)?

4-6V → CHECK FOR OPEN IN POTENTIOMETER R3, OPEN PIN R OF SMS CARD, SHORTED TRANS. Q1 A TYPE 108, OR SHORTED TRANS. Q2 A TYPE 119.

1.0-1.5V → REPLACE (SMS) REGULATOR CONTROL CARD.

IS 3 VOLTS D.C. PRESENT?

NO → TROUBLE IS IN I/O UNIT

YES → RECONNECT AMP CONN. A REMOVE I/O TESTER REAR COVER AND REMOVE CABLE CARD B3 AND TEST FOR 3 VOLTS D.C. BETWEEN B3B11(+) AND B3D08(-) ON CABLE CARD

IS 3 VOLTS D.C. PRESENT?

NO → CHECK CONTINUITY FROM A-103 TO B3B11 AND A-98 TO B3D08

YES → (1)

CHECK FOR DAMAGE ON CABLE CARD CONTACTS OR PIN CONTACTS ON HALF-LARGE CARD. TROUBLE MAY BE ON HALF-LARGE CARD. SEE LOGIC TA001

REMOVE AMP CONNECTOR A AND TEST FOR 3 VOLTS D.C. BETWEEN PINS A-103(+) AND A-98(-)

DATE	EC NO.	DATE	EC NO.
1-11-65	122926		
27OCT65	125579A		
21SEP66	125645		

TITLE I/O TESTER PWR.SUP.MAIN.DIAG.

IBM | TYPE

PART NO. 740487 | PAGE TA008

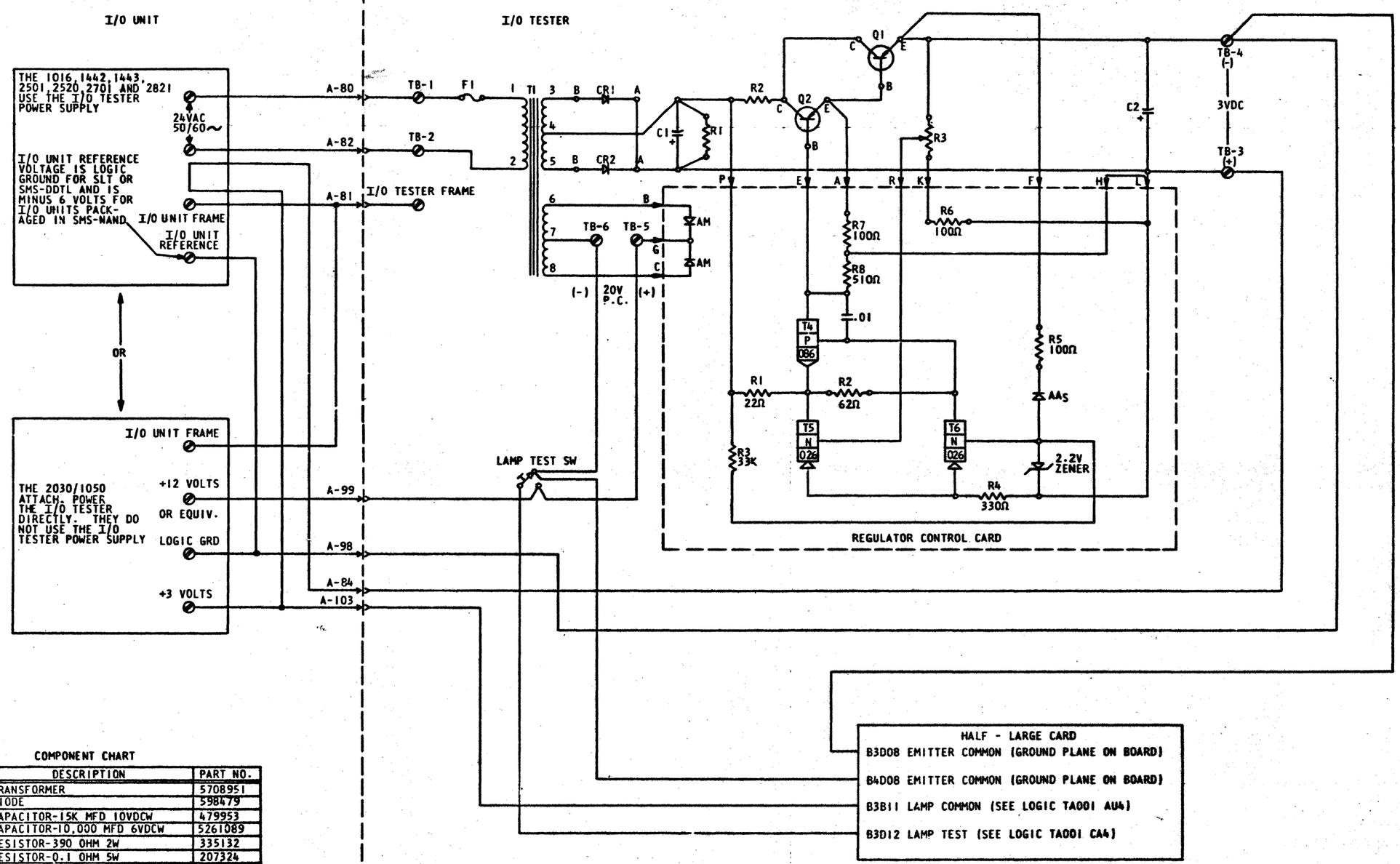

COMPONENT CHART

SYMBOL	DESCRIPTION	PART NO.
T1	TRANSFORMER	5708951
CR1,CR2	DIODE	598479
C1	CAPACITOR-15K MFD 10VDCW	479953
C2	CAPACITOR-10,000 MFD 6VDCW	5261089
R1	RESISTOR-390 OHM 2W	335132
R2	RESISTOR-0.1 OHM 5W	207324
R3	POTENTIOMETER-100 OHM 0.5W	441181
Q1	TRANSISTOR - TYPE108	369214
Q2	TRANSISTOR - TYPE119	369616
F1	FUSE-1.5 AMP-LONG TIME LAG	111256
	SMS CARD ASM	374818

N-3

DATE	EC NO.	DATE	EC NO.	TITLE I/O TESTER POWER SUPPLY DIAG.
1-11-65	122928			IBM / TYPE
5-11-65	124244			
21SEP66	125645			PART NO. 740494 / PAGE TA009

361453 AND-OR-Invert

AND-OR-Invert, Medium-Speed (AOI)

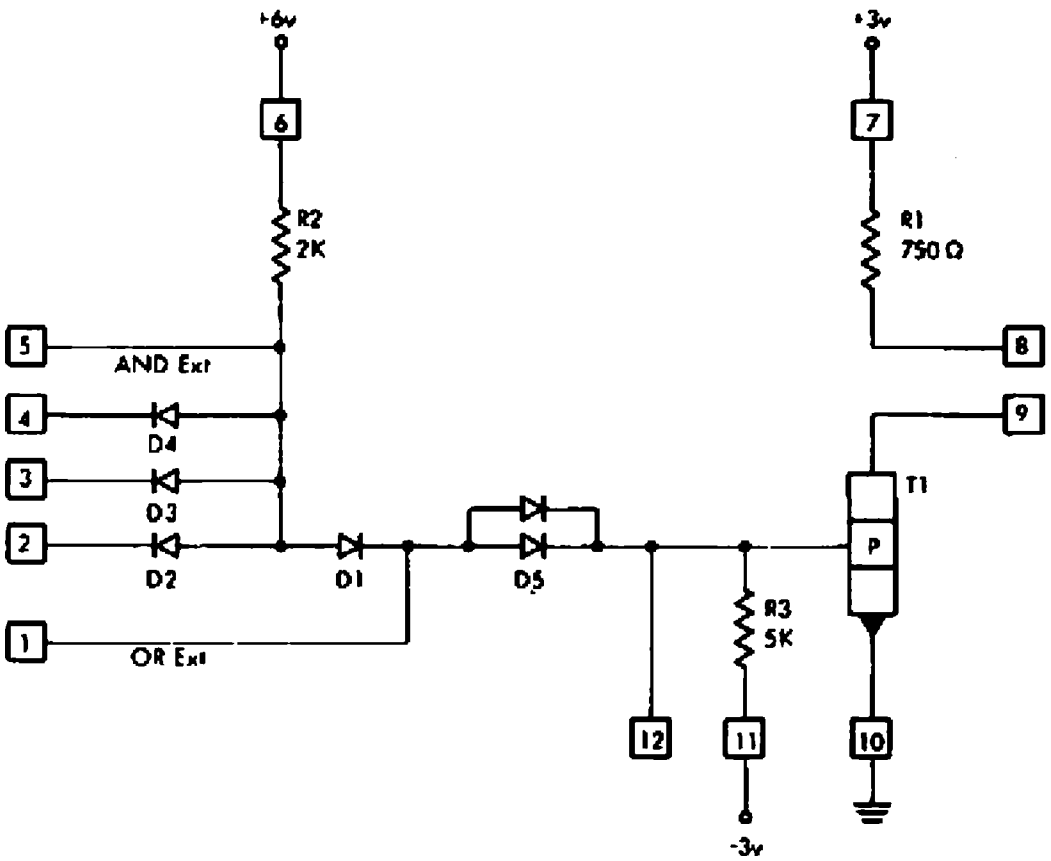

P/N 361453

The AOI module consists of a three-way diode positive AND function and one diode for an OR function, followed by a saturating transistor inverter.

Pins 2, 3, and 4 are the AND inputs.

Pin 5 will extend the fan-in to the AND by connecting it to the common anode diodes of the FDD module.

Pin can extend the OR fan-in from the OR diode of the AOX module.

The maximum OR fan-in is 5.

The output pins, 8 and 9, are connected together on the card for most applications; however when collectors are dotted (wire-ORed), only one collector resistor may be connected to retain the specified fan-out capability.

The AOI can drive a maximum of 5 AOI circuits (low speed) or 7 AI/AOI circuits (medium speed).