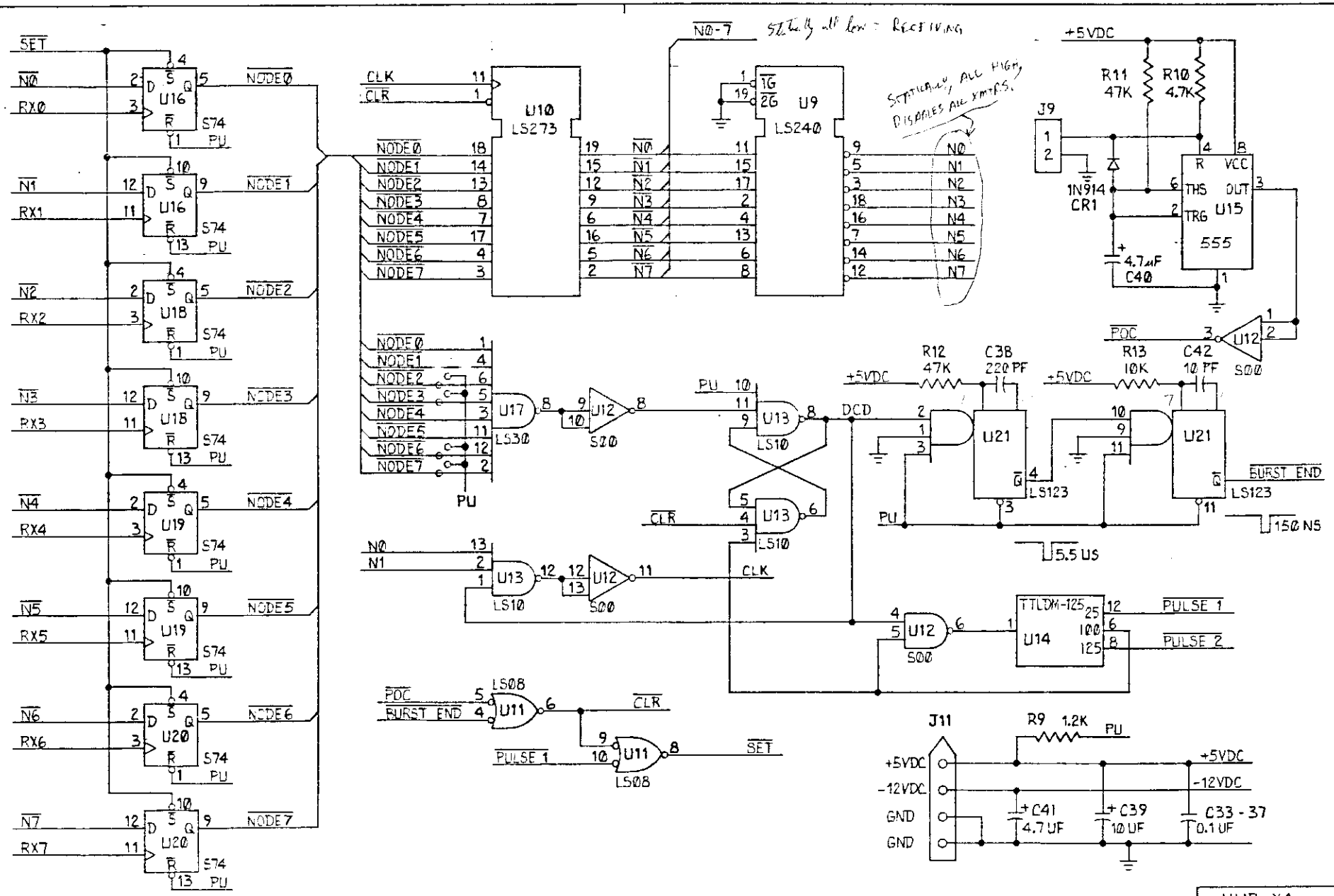

HUB-XA

SHEET 2 OF 3

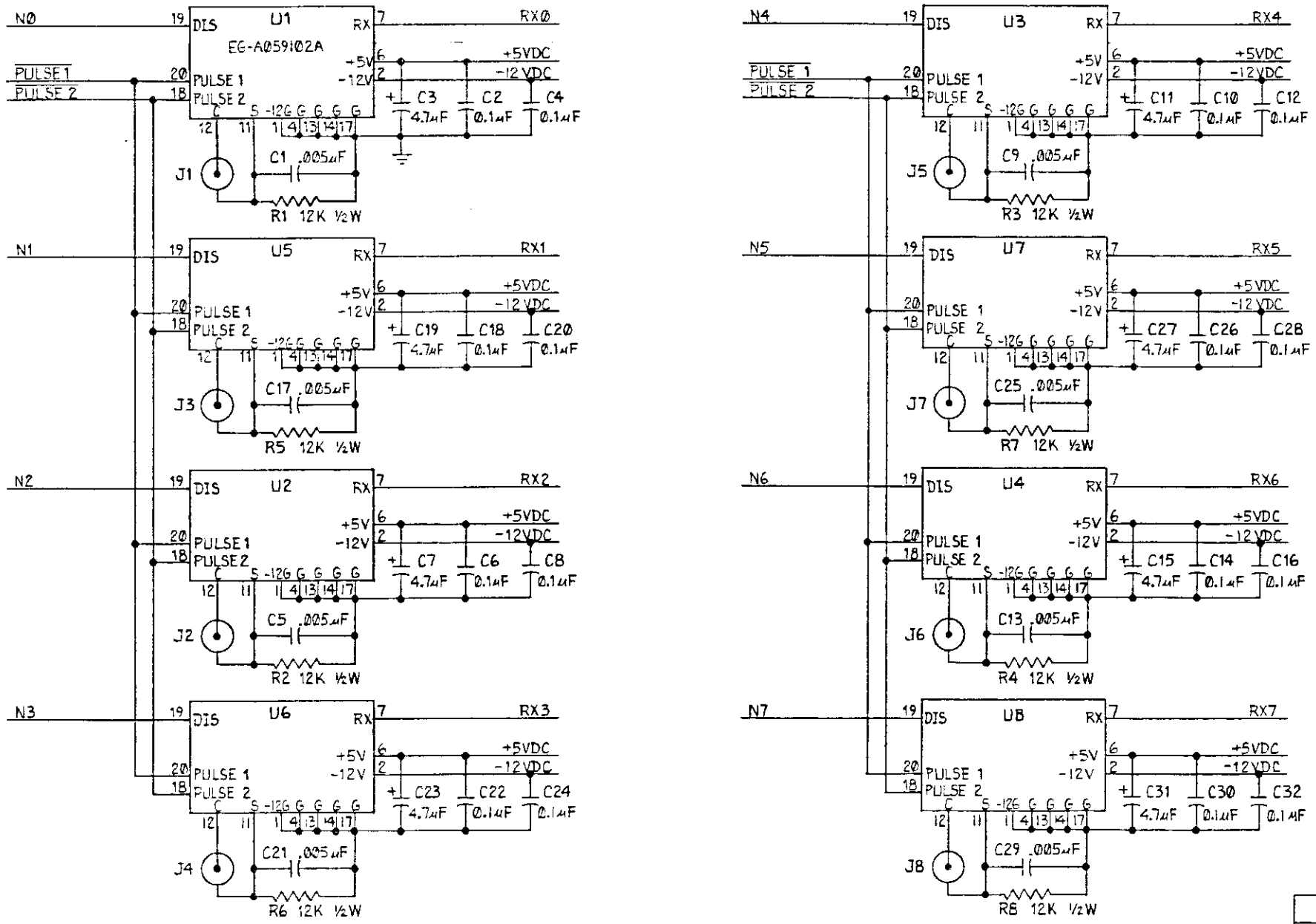

HUB-XA

SHEET 3 OF 3