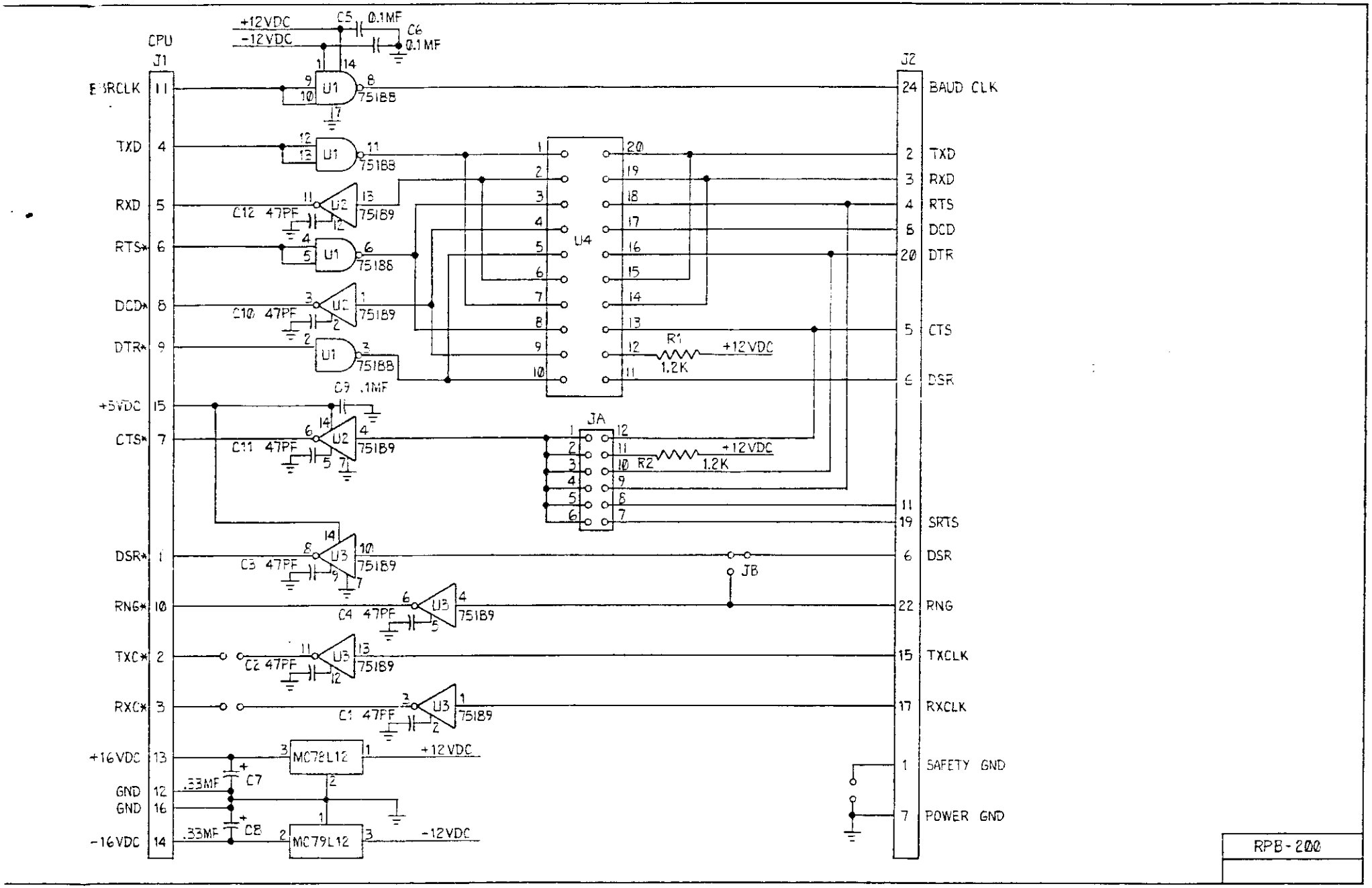
CPU
J1
J2
+12VDC
-12VDC
C5 0.1MF
C6 0.1MF
BRCLK
TXD
RXD
RTS*
DCD*
DTR*
+5VDC
CTS*
DSR*
RNG*
TXC*
RXC*
+16VDC
GND
GND
-16VDC
U1 75188
U2 75189
U3 75189
U4
JA
JB
R1 1.2K
R2 1.2K
C9 .1MF
C10 47PF
C11 47PF
C12 47PF
C3 47PF
C4 47PF
C2 47PF
C1 47PF
MC78L12
MC79L12
C7 .33MF
C8 .33MF
BAUD CLK
TXD
RXD
RTS
DCD
DTR
CTS
DSR
SRTS
DSR
RNG
TXCLK
RXCLK
SAFETY GND
POWER GND
RPB-200