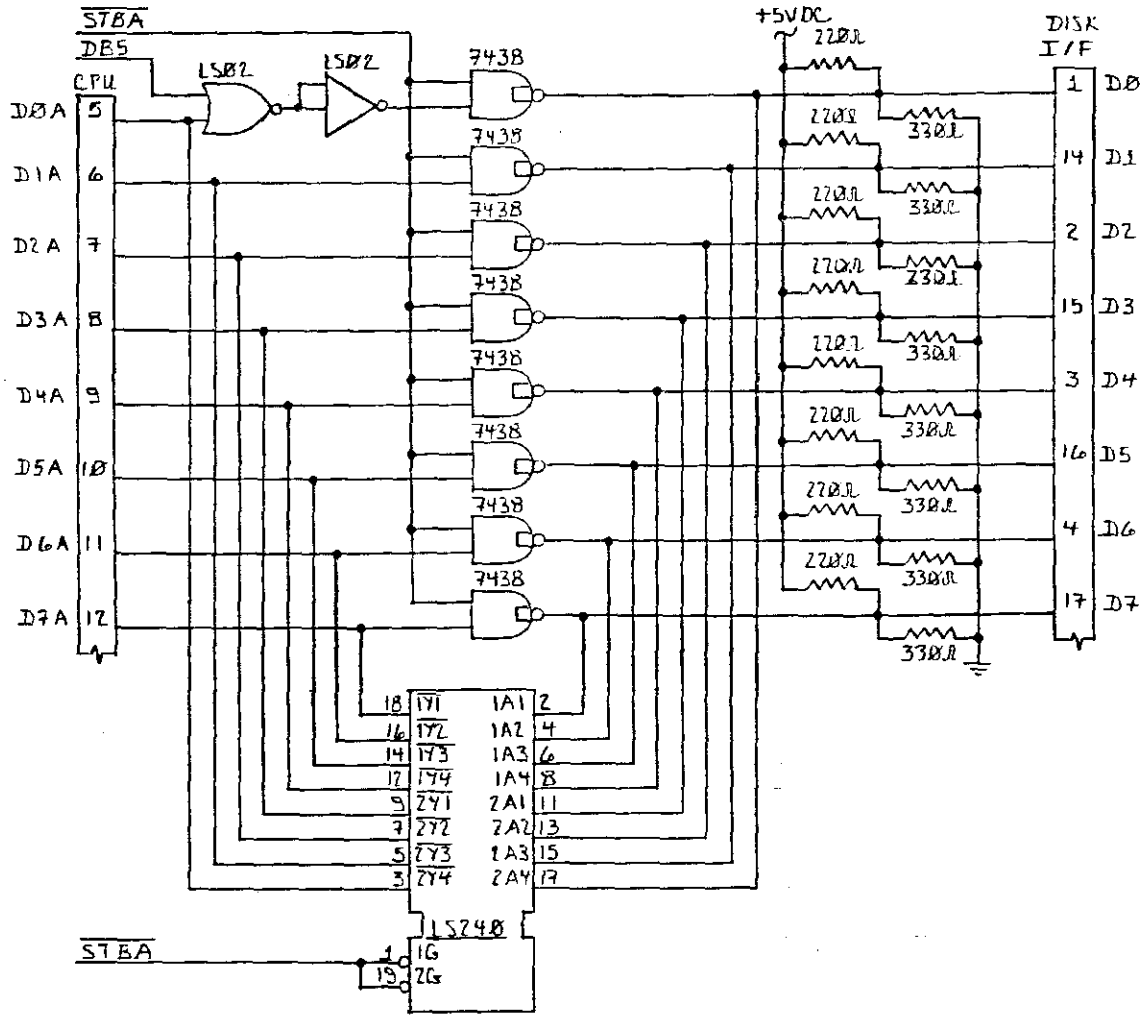

DESIGNED:	
REV: —	SCHEMATIC/LOGIC DIAGRAM FOR S.A.S.I. (SHUGART ASSO SYSTEM INTERFACE) PERSONALITY BOARD
	PART NO. SAS100
	SH1 OF

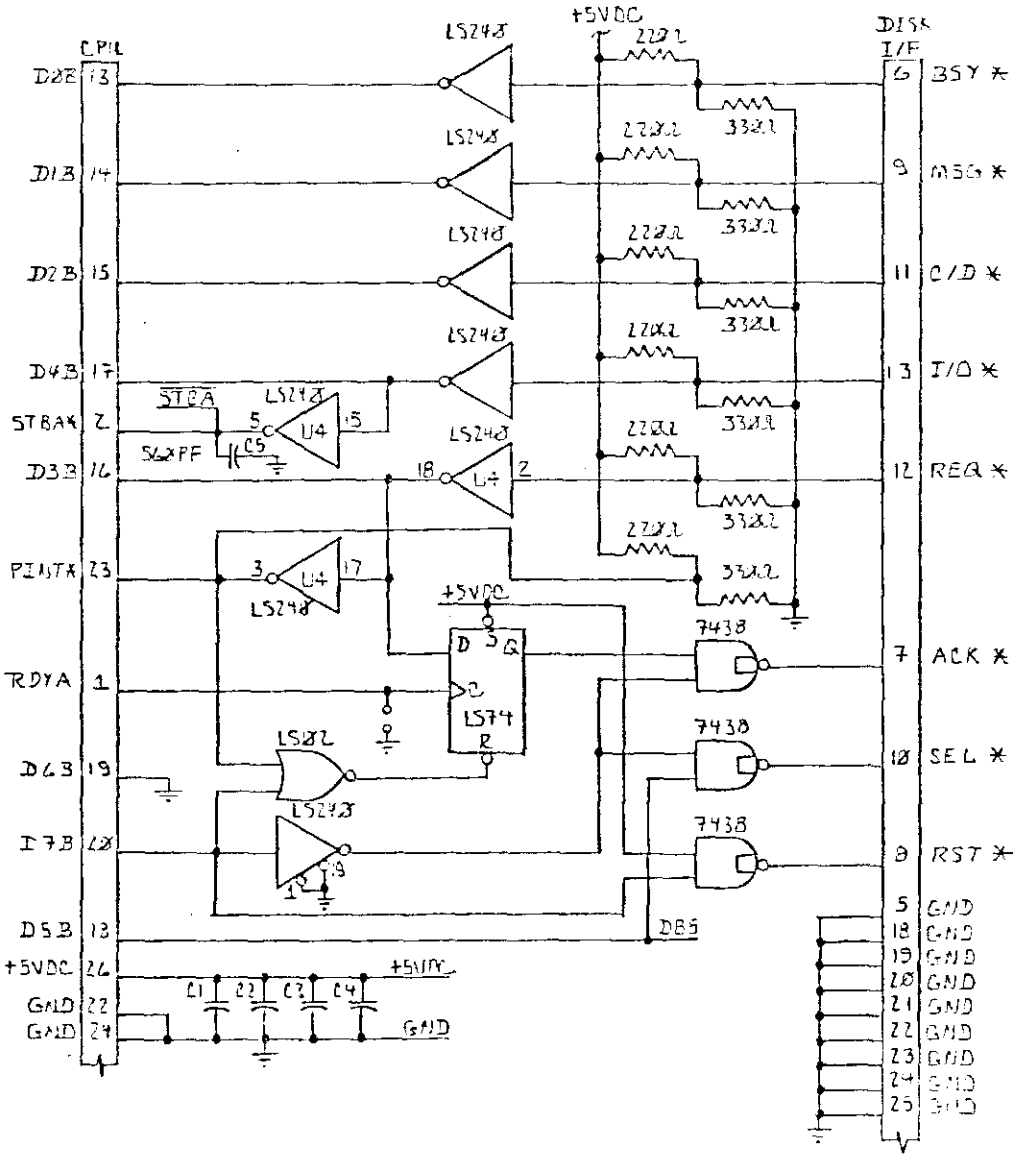

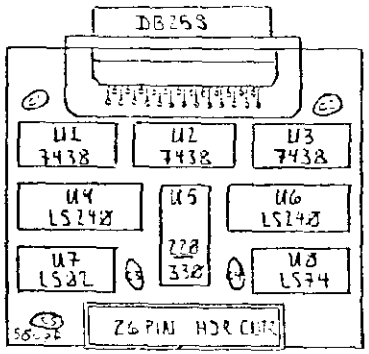

SAS100

PART NO. SAS100	SH 2 OF