Price: $3.25

MAGNETIC TAPE SYSTEMS
TECHNICAL MANUAL

Models: 9246A/9248, 92461A/92481
and 92462A/92482

SDS 901096A August 1965

SCIENTIFIC DATA SYSTEMS/1649 Seventeenth Street/Santa Monica, California/UP 1-0960

Scientific Data Systems, Inc. Printed in U.S.A.

MASTER INDEX

TITLE	SDS NUMBER	PRICE
GENERAL DESCRIPTION	901041	$ .25
OPERATING INSTRUCTIONS	900515A	.50
PROGRAMMING INSTRUCTIONS	900516A	.50
LOGIC DESCRIPTION, W BUFFER	900517A	.50
LOGIC DESCRIPTION, MAGNETIC TAPE SYSTEM	900518A	.50
LOGIC EQUATIONS, MAGNETIC TAPE CONTROL UNIT	900520B	.25
LOGIC EQUATIONS, ELECTRONIC UNITS	900521B	.25
INSTALLATION, MAINTENANCE, AND CALIBRATION PROCEDURES	900519B	.50
INSTALLATION DRAWING, MAGNETIC TAPE	103476	-
INSTALLATION DRAWING, INTERLACE	102219	-
INSTALLATION PROCEDURE, INTERLACE	101955	-
	Total	$3.25

1

GENERAL DESCRIPTION
MAGNETIC TAPE SYSTEMS

Models: 9246A, 92461A, 92462A,
9248, 92481, 92482

SDS 901041A August 1965

SCIENTIFIC DATA SYSTEMS/1649 Seventeenth Street/Santa Monica, California/(213)871-0960

© 1965, Scientific Data Systems

Printed in U.S.A.

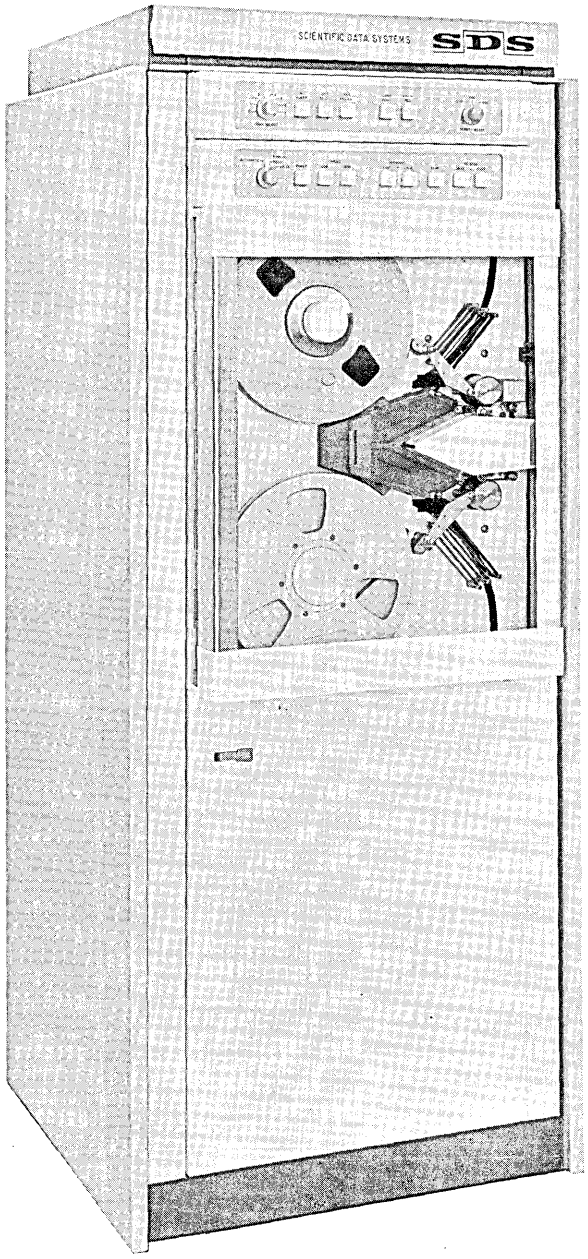

Magnetic Tape System

GENERAL DESCRIPTION
MAGNETIC TAPE SYSTEMS
Models 9246A and 9248

A. INTRODUCTION

The following information is applicable to Magnetic Tape Systems Models 9246A and 9248 also Models 92461A/92481 both 41.7 Kc, and Models 92462A/92482 60 Kc, which are manufactured by Scientific Data Systems, Santa Monica, California. These Magnetic Tape Systems are used as input/output devices with SDS 900 Series Computers.

B. PHYSICAL DESCRIPTION

As shwon in the frontispiece, all components of the magnetic tape system (excluding Buffer Interlace) are contained within cabinets constructed on a welded steel frame. The basic structure within each cabinet is a conventional RETMA rack providing standard 19-inch component mounting to facilitate system configuration flexibility. Side panels are completely removable, and large doors at the front and rear provide maximum access for installation and service operations to the components. Pushbutton controls on the Manual and Auxiliary Control Panels illuminate to indicate operational status of the system. The Buffer Interlace Unit (9121) is mounted within the computer.

C. SYSTEM CONFIGURATIONS

The versatile design of SDS magnetic tape systems incorporates features which make them readily adaptable to various computer system application requirements. Possible forms of system applications are illustrated in Figure 1 block diagram, and are described in the following paragraphs.

C-1. MAGNETIC TAPE UNIT, MODEL 9246A

This unit is comprised of two major subcomponents: (a) the tape transport with its own power supply and Manual Control Unit, and (b) the tape electronic unit with the PX10 Power Supply and an Auxiliary Control Unit. The Magnetic Tape Unit, Model 9246A, 92461A or 92462A is the fundamental component of the magnetic tape system. One to eight of these units are operated in conjunction with a Magnetic Tape Control Unit, Model 9248, 92481, or 92482 and a Buffer Interlace Unit, Model 9121, for input/output operations with an SDS 900 Series Computer. A second group of one to eight Magnetic Tape Units, a second Magnetic Tape Control Unit, a Y Buffer (Model 9120) and a Buffer Interlace Unit are required to form an extended Magnetic Tape System.

C-2. MAGNETIC TAPE CONTROL UNIT, MODEL 9248, 92481 or 92482

This unit permits one to eight Magnetic Tape Units to be used as input/output devices for SDS 900 Series Computers. The Magnetic Tape Control Unit is physically installed within the equipment rack (9110 or 9210) containing the first Magnetic Tape Unit.

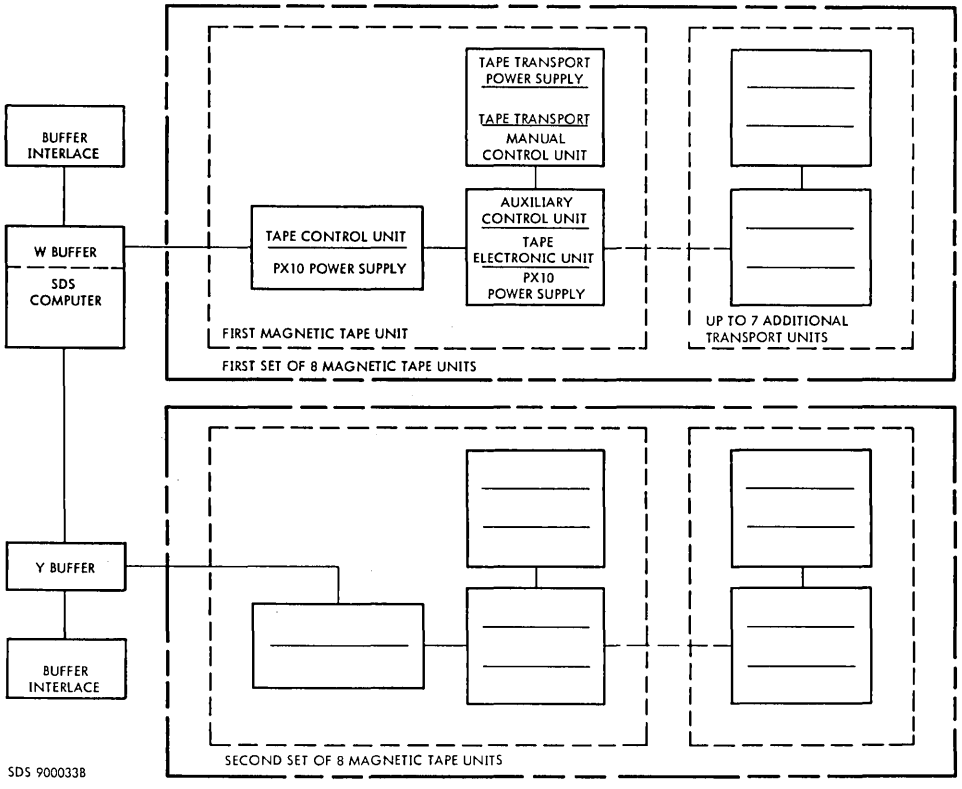

Figure 1. Magnetic Tape System Configuration

D. SPECIFICATIONS

Tape Transport	Ampex, Model TM-4
Tape Speed-Read/Write	75 ips
Tape Speed-Rewind	150 ips (3.25 minutes to rewind 2400 feet of tape)
Reels and Hubs	10-1/2 inch take-up reel; 10-1/2 inch file reel with file protect ring and IBM hub
Tape Drive	Capstan pinch roller drive with reel control servos and vacuum buffer storage chamber
Recording Method	NRZI (non-return-to-zero-change-on ones)
Recording Format	7 channel, 6 bits and parity, self-clocking, BCD or binary
Inter-Record Gap	3/4 inch
Recording Density	9246A and 92461A: 200 or 556 characters per inch, 92462A: 200, 556 or 800 characters per inch.
Character Read/ Write Rate	15,000, 41,667 or 60,000 characters per second depending on the density.
Tape	1/2-inch wide x 2400 feet long with 1-1/2 mil thickness Mylar tape
End-of-Tape Sensing	Reflective marker photosensing
Read/Write Head	Seven channel, dual gap, IBM compatible

II

OPERATING INSTRUCTIONS
MAGNETIC TAPE SYSTEMS

Models: 9246A, 92461A, 92462A, 9346A, 9248, 92481, 92482, and 9348

SDS 900515 October 1964

SDS

SCIENTIFIC DATA SYSTEMS/1649 Seventeenth Street/Santa Monica, California/UP 0-5471

© 1964 Scientific Data Systems

Printed in U.S.A.

CONTENTS

Page

OPERATING INSTRUCTIONS MAGNETIC TAPE SYSTEMS 1

A. Controls and Indicators 1

A-1. Manual Control Panel 1
A-2. Auxiliary Control Panel 1

B. Operating Instructions 2

B-1. Power Application 2
B-2. Tape Threading Procedure 2

C. Placement of Load-Point and End-of-Reel Markers 4

FIGURES

Figures Page

1 Operator Control Panels 1

2 Power Control Panels 2

3 Magnetic Tape Threading Procedure 3

4 Location of Load-Point and End-of-Reel Markers 4

OPERATING INSTRUCTIONS
MAGNETIC TAPE SYSTEMS
Models 9246A, 92461A, 92462A, 9346A, 9248, 92481, 92482, and 9348

A. CONTROLS AND INDICATORS

A-1. MANUAL CONTROL PANEL

The manual control panel shown in Figure 1 has facilities for power application control, selection of either AUTOMATIC or MANUAL mode of operation, and local control of tape motion when operated in the MANUAL mode. Electromechanical control function interlocks in the control panel ensure against generation of conflicting control signals during MANUAL mode of operation.

Pressing the POWER pushbutton switch applies primary power to the tape transport power supply. Pressing this switch illuminates the LOW SPEED indicator if circuit interlocks are in normal operating position.

The mode selector switch may be rotated to select either AUTOMATIC computer-controlled operation or local MANUAL mode of operation. When switched to MANUAL READ or WRITE, tape unit operations are controlled by the pushbutton switches on the manual control panel.

Pressing the FAST FORWARD pushbutton moves the tape forward (from upper reel to lower reel) at twice normal speed. When the DRIVE FORWARD pushbutton is pressed the tape moves forward at normal speed. Similarly, the FAST REVERSE pushbutton switch allows the tape to be operated in the reverse direction (from lower reel to upper reel) at twice normal speed, and the DRIVE REVERSE switch at normal speed in the reverse direction. When the tape is moving at the faster speed, the HIGH SPEED indicator on the Manual Control Panel is illuminated. The LOW SPEED indicator is illuminated when the tape is moving at the normal read/write drive speed. Tape motion stops when the Load-Point or End-of-Reel reflective markers are encountered, or the STOP pushbutton is pushed.

A-2. AUXILIARY CONTROL PANEL

The Auxiliary Control Panel (Figure 2) offers facilities for programmed selection of specific tape units in a computer system when operated in the AUTOMATIC mode, and illuminated indication of the operational status of each magnetic tape transport. Selection of recording and reading density is also provided.

The tape UNIT SELECT switch permits designating numbers 0 through 7 to the tape units used in a system. When the system is in AUTOMATIC mode, a tape unit will respond only to computer commands whose address bits correspond to the tape UNIT SELECT switch setting.

The UNIT POWER indicator provides visual indication that dc power is applied to the tape unit.

The FILE PROTECT indicator provides visual indication of whether or not recording may be accomplished. A file protect ring is inserted into a reel of tape if that reel is to be recorded. If a reel is only to be read, then no ring is inserted in the reel, and the FILE PROTECT indicator will be on.

The UNIT READY indicator provides visual indication of the status of a tape unit. A lighted condition of the UNIT READY indicator denotes that a tape transport is available for use under computer control. When the tape transport is in use or when the tape handler interlocks are not properly set, the indicator is off. The UNIT READY indicator circuit is inhibited for approximately 90 seconds after initial power is applied to the unit.

The LOAD POINT indicator provides visual indication that the tape is positioned such that the beginning-of-reel reflective tab is being sensed.

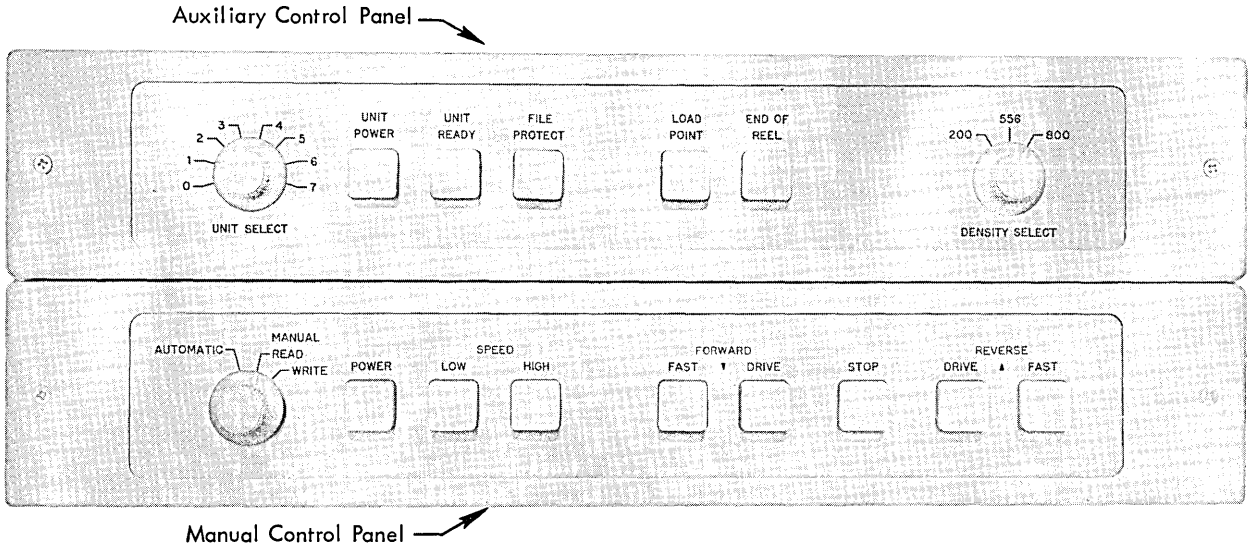

Figure 1. Operator Control Panels

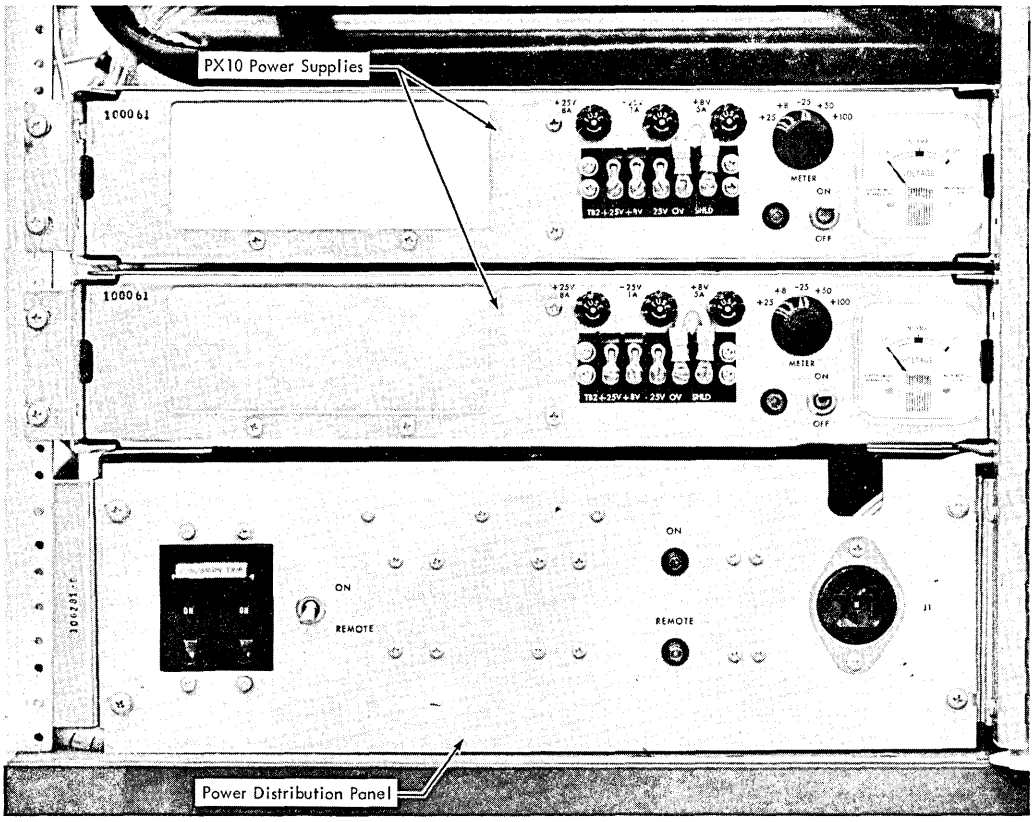

Figure 2. Power Control Panels

The END OF REEL indicator provides visual indication that the tape is positioned such that the end-of-reel reflective tab is being sensed. When operating in AUTOMATIC mode, the indicator remains lighted if the tape is moved beyond the end-of-reel reflective tab.

The DENSITY SELECT switch permits selection of recording or reading densities of 200 bits per inch, 556 bits per inch or, when applicable, 800 bits per inch.

B. OPERATING INSTRUCTIONS

B-1. POWER APPLICATION

The following steps are required to apply power for typical tape system operations:

a) Switch Power Distribution Panel circuit breaker (Figure 2) to ON, and set ON-REMOTE switch to REMOTE. (If tape unit is to be operated in MANUAL mode only, set ON-REMOTE switch to ON.)

b) Set PX10 Power Supply ON-OFF switch to ON (Figure 2).

c) Press POWER pushbutton switch on Manual Control Panel.

d) Rotate UNIT SELECT switch to programmed unit number setting.

e) Rotate mode select switch to AUTOMATIC. After a delay of approximately 90 seconds, the UNIT READY indicator on the Auxiliary Control Panel should light indicating the tape unit is prepared to accept computer control.

B-2. TAPE THREADING PROCEDURE (see Figure 3)

The following procedure must be accomplished with electrical power turned on and the system in MANUAL mode status.

a) Clean read/write head and tape guide rollers with lint-free cloth dampened with magnetic tape head cleaner (Ampex #087-007). Use lint-free cloth dampened with ethyl alcohol to clean capstans and other tape unit parts. Allow no alcohol to reach capstan roller bearings.

b) Pull open the thread lever handle. As the handle is opened the tape tension arms move inward to the tape loading position.

CAUTION

Do not handle tape reels in a manner that will compress reel flanges against the tape.

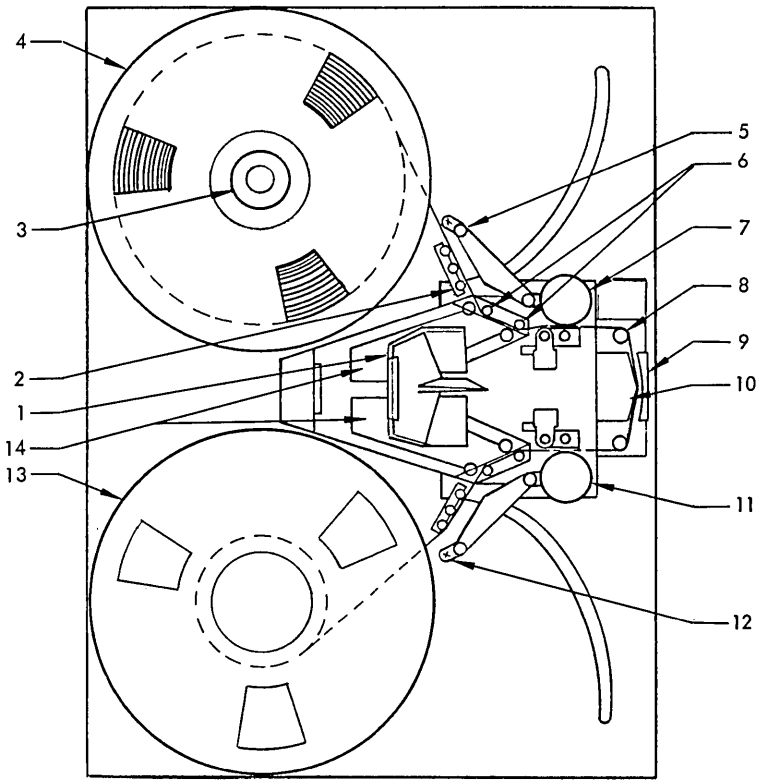

TAPE LOADING POSITION

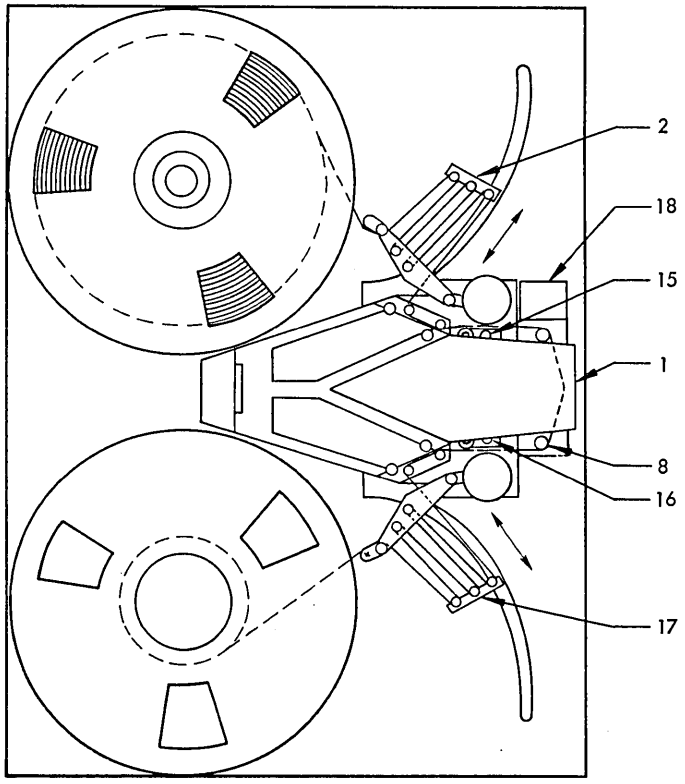

OPERATING POSITION

1. Thread Lever Handle
2. Upper Tension Arm
3. Reel Hub Knob
4. Supply Reel
5. Upper Sense Guide Assy.
6. Pin Guides
7. Upper Capstan
8. Head Assy. Tape Guides
9. Head Assy. Gate
10. Read/Write Head Assy.
11. Lower Capstan
12. Lower Sense Guide Assy.
13. Takeup Reel
14. Vacuum Chambers
15. Upper Pinch Roller
16. Lower Pinch Roller
17. Lower Tension Arm
18. Photo Sense Assy.

Figure 3. Magnetic Tape Threading Procedure

c) Install supply (upper) reel by holding reel firmly against turntable spacer disc, and then turning knob clockwise to ensure firm contact with reel to prevent reel slippage during operation. If file is to be protected, remove file-protect ring in tape reel before mounting.

d) Unwind approximately four feet of tape from supply reel, being careful not to allow tape to touch floor.

NOTE

Exercise extreme care when threading tape not to touch oxide surface on the tape; handle minimum length of leader only. Skin oils or dust on tape can cause read/write malfunction.

e) Starting at upper reel, place tape under upper guide assembly and across the upper tension arm rollers.

f) Thread tape between pin guides and glass cover door on upper half of vacuum chamber. Push tape back against tape deck.

g) Insert tape between upper capstan and capstan roller.

h) Open head assembly gate, and place tape over head assembly tape guide and across the head. Close head assembly gate.

i) Place tape under lower tape guide and between lower capstan and capstan roller.

j) Thread tape between pin guides and glass cover door on lower half of vacuum chamber. Push tape back against tape deck.

k) Place tape across lower tension arm rollers and over lower sense post guide assembly.

l) Holding free end of tape to core of take-up (lower) reel, manually turn reel in clockwise direction to wind approximately five turns of tape onto reel.

CAUTION

Do not insert free end of tape into slot in reel core nor secure tape end to reel core in any other manner.

m) Release thread lever handle latch, and return handle to the closed position. Close tape transport glass door.

n) Operate tape unit in MANUAL mode at FORWARD DRIVE speed until tape is beyond the LOAD POINT. Operate the tape unit in MANUAL mode at REVERSE DRIVE speed until tape stops at LOAD POINT.

C. PLACEMENT OF LOAD-POINT AND END-OF-REEL MARKERS

Reflective marker strips are placed on the non-oxide surface of the tape near the beginning and end of each reel of magnetic tape as illustrated in Figure 4. IBM 352407 Reflective Tape, or equivalent, should be used for these markers.

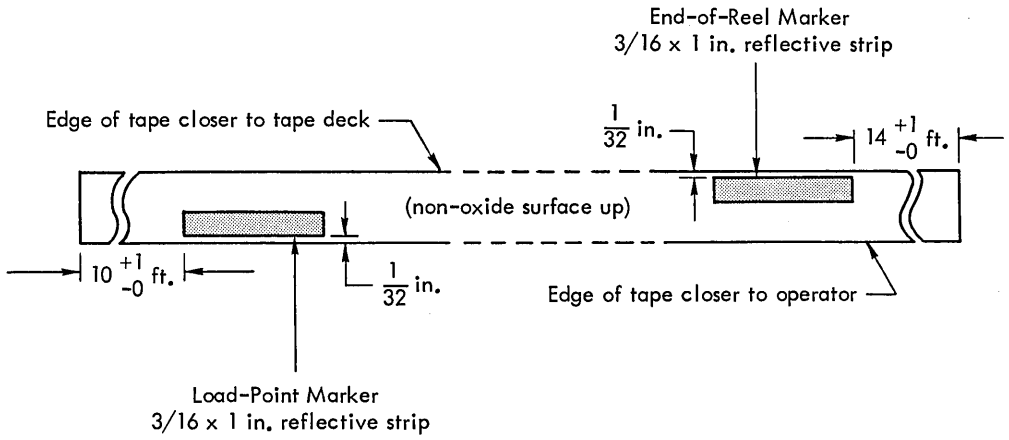

Figure 4. Location of Load-Point and End-of-Reel Markers

PROGRAMMING INSTRUCTIONS
MAGNETIC TAPE SYSTEMS

Models: 9246A, 92461A, 92462A,
9246P, 92461P, 92462P,
9248, 92481, 92481 with
SDS 910 or 920 Computer

SDS 900516 October 1964

SCIENTIFIC DATA SYSTEMS/1649 Seventeenth Street/Santa Monica, California/UP 0-5471

©1964 Scientific Data Systems

Printed in U.S.A.

CONTENTS

		Page
PROGRAMMING INSTRUCTIONS		1
A.	Introduction	1
	A-1. General	1
	A-2. Program Restrictions	1
	A-3. Signals From The Tape Unit	2
B.	Write Operations	3
	B-1. Writing A Tape Record	3
	B-2. Erasing Tape	3
	B-3. Writing At The Ends of the Tape	4
	B-4. Writing An End-of-File Record	4
C.	Read Operations	4
	C-1. Reading A Tape Record	4
	C-2. Reading An End-of-File	5
	C-3. Reading At The End of the Tape	5
D.	Scan And Search Operations	5
	D-1. Scan Tape	5
	D-2. Search	5
	D-3. Scanning An End-of-File Record	6
	D-4. Scanning At The Ends of the Tape	6
E.	Space And Rewind	6
	E-1. Spacing	6
	E-2. Rewinding	6
F.	Summary Of Tape Operation Codes	7
	F-1. Test Conditions	7
	F-2. Tape Functions	7

A. INTRODUCTION

The following information is applicable to Magnetic Tape Systems comprised of models 9246A, 92461A, 92462A, 9246P, 92461P, 92462P, 9248, 92481 and 92482 used in conjunction with an SDS 910 or 920 Computer.

A-1. GENERAL

The basic programming of writing and reading magnetic tape is essentially the same as for any other combination of input and output devices which use interlace control. Since tape is also used as an external storage device rather than strictly an input or output device, certain other functions are unique to programming for magnetic tape systems. These functions are described in detail in this section. In addition to the high density write/read operations of the Magnetic Tape System, all functions described in the low density manual (Magnetic Tape System, 15Kc) can be accomplished on this system when operating in the low density mode: 800 bpi (60 Kc) operation assumes high speed Y-Buffer (9220).

A-2. PROGRAM RESTRICTIONS

Without-Leader EOM Instructions

As a general rule, all EOM instructions to the tape units should specify start-without-leader. Since the tape unit generates gap on all write operations automatically, it is not necessary for the starting EOM to call for leader. A leader instruction should never be included in a magnetic tape program because the buffer will then attempt to generate leader, and an erroneous operation may occur.

Four-Character Mode

It is possible to write tape in a 1-, 2-, or 3-character-per-word mode provided the buffer can be kept supplied with characters at a sufficient rate. On reading, however, the tape unit uses the buffer character count to ascertain when it has read two characters and can look for gap. If a 1-character-per-word read were started, a single noise character would stop the tape. In reverse-read, a 1-character-per-word operation would cause the tape to stop after detecting the longitudinal check character at the end of the record. This means the tape would stop in the recorded information.

All scan operations must be in 3-or 4-character-per-word mode or the tape will not stop when it reaches gap.

As a general rule, tape units should be programmed for four characters per word if possible. The write-tape-mark operation is an exception to this rule.

Timing Considerations

The Tape Control Unit is designed such that there are no timing restrictions on programming the tape unit. When the tape unit is allowed to stop it will not be ready for another operation until after the lapse of a 17-millisecond interval from the initiation of the original start instruction. If the previous operation, from start to final tape stop, lasted longer than 17 milliseconds, then there is no delay before starting the next operation. In any event, the programmer need only concern himself with ascertaining that the unit is ready before he gives a start command.

Parity of Longitudinal Check Character

The longitudinal check character always reflects an even parity check for each channel. In the BCD (even lateral parity) mode, the check character itself will always have an even number of one-bits. In the binary (odd lateral parity) mode, however, the check character may have either an even or an odd number of one-bits. This means that a reverse read or scan over a binary record may result in turning on the error indicator in the buffer even though the record itself is correct. As a general rule the error indicator should be ignored after a reverse operation.

Buffer Ready Indication

When programming the tape unit without using the interrupt system, the user should allow the buffer to become ready after the completion of a tape operation before starting another operation. This is necessary, because even though the tape unit itself is physically ready, the tape control unit and buffer are busy for as much as 64-microseconds longer. The tape control unit must signal the buffer that the operation is complete, and the buffer must then disconnect the Tape Control Unit.

In general, when programming two or more tape operations sequentially, the buffer ready signal is used to determine when the first operation is complete, and then the tape unit ready signal to determine if the second operation can be initiated. Continued operations are an exception to the rule. In a continued operation, the tape is kept moving, therefore, it is never ready.

Reading Beyond the Last Write

Once the programmer has written a record on tape he cannot be assured that any records after that can be read. This means that a record in the middle of a file cannot be updated or re-written if the user ever wishes to read the records that follow it.

Backspace or Rewind after a Write

An end-of-file character should be written, or a segment of tape erased after a series of records have been written if the user wishes to backspace or rewind and then expects to return at some later time to record additional information at the end of the previous series of records. This practice provides positive identification of the end of a record and facilitates return to a specific location on the tape. If this method is not used, there is a possibility that the tape will not stop in the same location at the end of the series of records as it did when the last record was written. This would leave a segment of tape in the gap which has not been written and may cause erroneous operation when the tape is read.

A-3. SIGNALS FROM THE TAPE UNIT

The tape unit sends nine status signals to the computer which can be tested with SKS instructions as described in the following paragraphs. These may be tested before or after any tape operation to determine the status of the tape unit.

Tape-Unit-Ready Test

The tape-unit-ready test, TRT, (SKS 10410 for unit 0 on the W buffer) will skip if the tape unit is not ready. Test instruction TRT may be used with two BRU instructions to wait for the tape unit to become ready before starting an operation. The tape unit is not ready if at least one of the UNIT SELECT switches on the tape units in the system is not set to the logical unit number being tested, or if the selected unit is not in AUTOMATIC mode of operation. If the tape on the selected unit is in motion for any operation the unit will not be ready.

File-Protect Test

The tape file-protect test, FPT, (SKS 14010 for unit 0 on the W buffer) will skip if the file protect is not on. In other words, if the tape can be written, the FPT instruction will skip; if it cannot be written, FPT will not skip. This instruction should be used before any write operation to ascertain if it is possible to perform the write. This test is effective only when the tape unit is in AUTOMATIC mode.

Beginning-of-Tape Test

The beginning-of-tape (or load-point) test, BTT, (SKS 12010 for unit 0 on the W buffer) will skip if the tape is not positioned at the physical beginning of the reel of tape. This instruction can be used to determine when, or if, the tape is rewound, and is only effective in the AUTOMATIC mode of operation.

End-of-Tape Test

The end-of-tape test, ETT, (SKS 11010 for unit 0 on the W buffer) will skip if the tape is not at the physical end of the reel of tape. It should be used after every write operation to determine when the end of the tape is reached. This test is only effective in the AUTOMATIC mode.

Density Test, 200bpi

The density test for 200bpi, DT2, (SKS 16210 for unit 0 on the W buffer) will not skip if the specified unit DENSITY SELECT switch is set at 200bpi. If the switch is not set at 200 bpi, the test will skip the next instruction. This test is only effective in the AUTOMATIC mode.

Density Test, 556bpi

The density test for 556bpi, DT5, (SKS 16610 for unit 0 on the W buffer) will not skip if the specified unit DENSITY SELECT switch is set at 556bpi. If the switch is not set at 556bpi, this test will skip the next instruction and proceed from there. This test is only effective in the AUTOMATIC mode.

Density Test, 800bpi

The density test for 800bpi, DT8, (SKS 17210 for unit 0 on the W buffer) will not skip if the specified unit DENSITY SELECT Switch is set at 800 bpi. If the switch is not set at 800 bpi, this test will skip the next instruction and proceed from there. This test is only effective in the AUTOMATIC mode.

End-of-File Test

Tape end-of-file test, TFT, (SKS 13610 for all tape units on the W buffer) will skip if the last completed tape read or scan operation did not encounter a tape mark. The Tape Control Unit will detect a recorded tape mark and signal end-of-file after any read or scan operation in either the forward or reverse direction. This signal should not be tested until the completion of the operation, because the end-of-file signal will be true until some character, other than the tape mark, is read.

The end-of-file test is a Tape Control Unit signal, rather than a tape unit signal. Therefore, any W buffer tape unit address may be used to test the control unit connected to the W buffer. Any Y buffer tape unit address may be used to test the control unit connected to the Y buffer.

Gap Test

The tape gap test, TGT, (SKS 12610 for any tape on the W buffer) will skip as long as the tape is not in motion in the gap following a record written or read. When the tape unit has detected the gap at the end of a record and has checked the longitudinal parity character, it will generate the gap

signal. This signal will remain true for approximately one millisecond. During this time, the test instruction will not skip, and the tape may be given a command to continue in the direction it is going. If so programmed, the tape will continue without stopping.

If the record encountered should be an end-of-file, the gap signal will not become true, and the tape will always stop.

Like the end-of-file test, the gap test is a control unit test and any tape unit address may be used.

B. WRITE OPERATIONS

B-1. WRITING A TAPE RECORD

General

Writing on magnetic tape is similar to outputting information to any other output device, using the interlace to control data transfer. The program should first determine that the desired logical unit is ready and that the file protect is off. Interlace control is then set up, and the write-tape-binary (WTBW or WTBY) or write-tape-decimal, BCD, (WTDW or WTDY) EOM is executed. The interlaced buffer then governs transfer of data to the tape. A typical BCD start-write sequence is shown below with tape unit No. 6 connected to the W buffer.

01000	0	02	50000	START	EOM*	10000	Alert the interlace
01001	0	02	10000		EOM	10000	Set two high order count bits
01002	0	13	01040		POT	CW	Send control word to interlace
01003	0	02	02656		WTDW	6,4	Start write
01040	20004000			CW	OCT	20004000	Control word, 256 words starting at 4000

NOTE: The EOM in location 1001 is not needed to write a record of 256 words, but is there merely to illustrate the general case.

The buffer automatically terminates its output when the interlace word count is reduced to zero. If the interrupt system is enabled, an I2 (33 or 32) interrupt is generated when the tape is stopped.

Write Errors

If the read-after-write check finds either a character parity or longitudinal parity error, the buffer error flip-flop is set and can be tested with a BET instruction (SKS 20010 for the W buffer). If an error is detected during writing, the program may backspace the tape over the record and rewrite it. (Refer to paragraph E-1 for instructions to program a backspace.) A better procedure, however, is to erase backward over the record and then rewrite. If the write error was caused by a bad spot on the tape, the tape unit might read this spot as a gap on the backspace and stop in the wrong place. In the erase operation the tape will not stop on an erroneous gap, but will continue until the specified number of words are erased. Each repetition of this backup and rewrite operation will tend to elongate the gap by approximately 0.2 inch.

If the record is still wrong after the second or third try, it is probable that a bad spot on the tape is causing the write error. To correct this, the program should erase backward (or backspace, then erase the record forward) and try to write it again on a new section of tape.

B-2. ERASING TAPE

General

The erase tape operation is essentially equivalent to writing information except that no flux changes are recorded on tape. The erase is timed like a write operation, in that the interlace is used to supply dummy characters to the buffer and allow the tape unit to clock the desired number of character times for the length of tape to be erased.

Erasing a Record after a Write Error

When a write error occurs, an erase in reverse should be used to back up to the beginning of the record. This is accomplished by setting up the interlace exactly as was done for the preceding write operation, and executing an erase tape reverse (ETRW or ETRY, an EOM 07670 for unit 0 on the W buffer). Termination of the erase is the same as that for a write; when the operation is complete an I2 (33 or 32) interrupt occurs and the buffer is ready.

If a record cannot be rewritten, the user should erase it completely and try on a new section of tape. This is accomplished by first erasing in reverse to the beginning of the record, and then erasing forward for the same number of words as was programmed for the original write or reverse erase. This is programmed the same as a reverse erase except that a normal erase tape instruction (ETW or ETY, EOM 03670 for unit 0 on the W buffer) is used.

Erasing a Given Length of Tape

If one wishes to erase a fixed section of tape, it is only necessary to calculate the number of words that must be sent to the buffer to clock the erase operation over the desired length of tape. An allowance of about 0.45 inch should be made for gap that will be written by the tape control unit automatically. A write or erase operation stops when the read head finds the gap at the end of a record. Since the read head is always reading the gap in an erase operation, the tape stops 0.3 inch shorter after forward erase then after a write operation of the same length.

B-3. WRITING AT THE ENDS OF THE TAPE

Writing from the Load Point Marker

It is necessary to erase approximately 3 to 3.5 inches of tape before writing the first record when the tape is situated at the beginning of the reel on the load point marker. This allows the load point marker to pass over the head before the first information is recorded. An erase operation for 150 words will clear the desired section at 200bpi, 417 words are sufficient for 556bpi operation; 600 words are sufficient for 800bpi.

Writing Near the End of Tape

About 14 feet of tape are usually reserved between the end-of-reel marker and the end of tape. This space includes at least ten feet of leader and four feet of useable tape. When the end-of-reel marker is sensed, there is sufficient tape remaining to record 9,600 characters at 200 bpi, 26,688 characters at 556bpi or 38,400 characters at 800bpi.

B-4. WRITING AN END-OF-FILE RECORD

End-of-File Definition

An end-of-file record is traditionally defined as a gap 3.75 inches long followed by a tape-mark character (0001111) and its longitudinal check character. When read, the gap is ignored and the end-of-file is detected by reading the tape mark. Some tape systems, however, detect the long gap as the end of file. To maintain compatibility with these systems, the gap must be written. An end-of-file is used to indicate the end of a group of related records or the end of recorded information on a tape.

Writing the Long Gap

In 200bpi operation, an erase for 150 words produces the proper gap before the tape-mark character. In 556bpi operation, an erase for 417 words is necessary and in 800bpi operation, an erase for 600 words is necessary.

Writing the Tape Mark

The tape mark is a 1-character BCD record regardless of the parity of the previous information on the tape. To start the write process, an EOM instruction for one character per word in BCD should be given. This is followed by an MIW instruction to load a word into the buffer which contains 17XXXXXX (the 17 is the tape mark). The MIW is followed by a terminate output. As in any write operation, when the buffer is ready or when the I2 interrupt occurs, the operation is complete. For example, to write a tape mark on tape unit 3, the following sequence would be used:

02000	0	02	02053	START	WTDW	3,1	Write one character/word, BCD
02001	0	12	02100		MIW	TMC	Output tape mark constant
02002	0	02	14000		TOPW		Terminate output
02100	17000000			TMC	OCT	17000000	Tape mark constant

C. READ OPERATIONS

C-1. READING A TAPE RECORD

General

Reading from magnetic tape is similar to reading from paper tape under interlace control. When the tape is ready, a sequence like the one described for magnetic tape writing is executed, except with a read tape rather than a write tape EOM instruction. The tape starts and the interlace stores information in memory as the buffer fills. When the gap is encountered, the gap signal becomes true; and if another read tape command is given, the tape continues without stopping. If no second EOM is given, the tape stops, the buffer becomes ready, and an I2 (33 or 32) interrupt is generated. The program may then inspect the error indicator in the buffer to determine if a lateral or longitudinal parity error occurred. If an error occurred, the program should backspace over the record and attempt to reread it. At least 9 reread attempts, for a total of 10 read tries, should be made before the record is considered bad, or unreadable. Usually one reread will suffice to read the record correctly.

Long Records

If the record is longer in number of words than the word count set in the interlace, the interlace reaches zero before the gap is detected. When the interlace goes to zero, it disengages its control of the buffer and allows normal program control to resume. When the buffer fills again an I1 (31 or 30) interrupt will occur. At 200bpi the programmer can choose several responses to this condition. Usual procedure would be to execute a Skip-Remainder-of-Record EOM (SRRW, 02 13610), empty the buffer with a WIM, then clear the interrupt and return to the main program to await the end of record. If, however, the user wishes to continue to read the remainder of the record, he may reload the interlace and allow it to control the reading of the remaining information.

If this is done in 556bpi mode, or 800bpi mode using high speed Y-buffer (9220), the extended features of the High Speed Buffer should be used to automatically ignore the remainder of the record after the interlace word count goes to zero.

C-2. READING AN END-OF-FILE

The tape control unit does not generate the gap signal or an I1 interrupt if the program starts the tape in a read operation and the next record is an end of file. The tape stops, the buffer becomes ready, an I2 interrupt is generated, and the End-of-File test will not skip (TFTW, 40 13610).

A BCD record which consists only of 17_8 (001111) characters will be considered an end of file.

C-3. READING AT THE END OF THE TAPE

As in writing, when the end-of-reel marker is encountered, the End-of-Tape test will not skip. The user will normally have an end-of-file record after the last recorded information, even if this occurs beyond the end-of-reel marker. If preferred, however, it is possible to use the end-of-tape marker to indicate the end of information.

D. SCAN AND SEARCH OPERATIONS

D-1. SCAN TAPE

General

The scan-tape operation is like a non-interlaced read operation except that only one I1 interrupt (buffer full condition) occurs for each record. This occurs when the gap is first encountered and while the tape is still moving. The buffer at that time will contain the last four characters of the record. When scanning forward this means the last word of the record. When scanning reverse this means the first word of the record, which will be in reverse order by characters. For example, if the first word contained the eight octal digits 01 23 45 67, when this is loaded into the buffer in the reverse scan it would appear as 67 45 23 01. The position of bits in the character is not modified; only the order of the characters is changed in the word.

Continued Scan

Since the I1 interrupt (31 or 30), or buffer full condition, occurs when the gap is reached (but while the tape is still moving), it is possible to give another scan instruction and have the tape continue to scan the next record without stopping. The user has 500 microseconds from the time of the interrupt to give the continue command to keep the tape in operation. If no instructions are received by the tape control unit during this period, it will bring the tape to a stop in the middle of the gap and generate an I2 interrupt. The tape unit and buffer will then be in ready status.

D-2. SEARCH

Reverse Search

Searching for a given record that is identified by the first word is a simple application of the repeated scan-reverse operation. First, the identifier word should be reversed by character. When the selected tape unit is ready, it is started in reverse scan, SRBW (EOM 07635 for tape unit 5 on the W buffer). The program may wait for the I1 interrupt, or may hang up on a WIM instruction until the gap is reached and the buffer is filled with the first word of the record. This word is then compared with the reversed identifier for which the search is being made. If they are not equal, the program gives another scan-reverse EOM and waits to check the next record. If they are equal, the program does not give any further EOM instructions but merely waits for the I2 interrupt or for the buffer to be ready. The program may then indicate a forward-read if desired.

Forward Search

A search-forward operation could be executed in the same manner as the reverse search if the identifier word was recorded at the end of a record as well as at the beginning. Since this process is somewhat awkward, provision has been made to search forward on the first word of a record and read the information when the desired record is found. This is easily implemented on a 200bpi tape where the time between words is on the order of 32 cycles on a 910 or 920 system.

200bpi Forward Search

The search is accomplished by starting the tape in a forward-read operation, and waiting for the first I1 interrupt (buffer full condition). When this occurs, the identifier word is compared with the first word of the record. If they are not equal, an RTSW instruction (EOM 14000 for tapes on the W buffer) is given to convert the read operation to scan. When the next I1 occurs, the tape is at the end of the record, and the program gives another read EOM to keep the tape moving and check the next record. If the identifier word and the first record word are equal, the program goes ahead and reads the record, either under program control or by setting the interlace.

556bpi Forward Search

A search of a 556bpi tape cannot be readily implemented using a completely interrupt-controlled routine. It can, however, be done in a manner which will leave some time available for other operations and will keep the tape moving. The interrupt system is first disabled and the tape is started in a read operation. The program loads the search key into the A register and an appropriate mask into the B register, and hangs up on a WIM instruction. When the first word is read from the record, the WIM is executed and the program tests the word that was stored. If this is the record desired, the interlace is set up to store the remainder of the information and the interrupt enabled to notify the program when the operation is complete.

If this is not the desired record, the program gives another WIM to empty the buffer and an EOM instruction to convert the read to a scan (RTSW, 02 14000). The interrupt may now be enabled, and an I1 interrupt occurs at the end of

the record. At this time, the program gives another read tape instruction and inspects the identifier word of the next record. Using this system the program is occupied during the gap preceding each record, but is free for the time required to read or scan over that record.

A sample program for a forward-search operation on a 556bpi density tape is listed as follows:

```
01000 0 02 03610          RTBW 2,4      Start tape read
01001 0 32 00012          WIM  TEMP     Get first word
01002 0 70 00012          SKM  TEMP     Is this the correct
                                        record?
01003 0 01 01020          BRU  SKIP     No, skip the
                                        record
01004 0 02 50000          EOM* 10000    Yes, alert the
                                        interlace
01005 0 13 02000          POT  ALPHA    Set the interlace
- - - - - - - - - - - - - - - - - - - - - - - - continue
01020 0 40 13610 SKIP     TFTW          Was this an end
                                        of file?
01021 0 01 03000          BRU  DONE     Yes
01022 0 32 00012          WIM  TEMP     No
01023 0 02 14000          RTSW          Convert to scan
- - - - - - - - - - - - - - - - - - - - - - - - continue
02000 20004000      ALPHA OCT  20004000 Interlace control
                                        word
```

800bpi Forward Search

Tapes recorded at 800bpi transfer information too fast for a forward search of the type described above. At this density, it is not possible to have program overlapped with non-stop tape searching. If overlapped operation is required, then the program should simply read each record and when the end-of-record interrupt occurs, examine the key word to determine if the record is the one being sought; if not, another read can be initiated.

If it is required that the tape unit move tape continuously until the desired record is located, a different technique is employed. While the record is being read, the program hangs up on a tape-gap test. When the gap is reached, the key word is inspected and if the record is not the correct one, a new read is initiated while the tape is still moving. When the correct record is found, the program does nothing more and the tape stops.

D-3. SCANNING AN END-OF-FILE RECORD

As in the read mode, when an end-of-file record is encountered while scanning, the end-of-file test will not skip. In the scan mode, however, an I1 interrupt will occur after the end-of-file record is encountered and before the tape stops.

D-4. SCANNING AT THE ENDS OF THE TAPE

Scanning Near the Beginning of Tape

When scanning in reverse, the detection of the load-point marker will cause the tape to be stopped, and an I2 (33 or 32) interrupt and buffer ready condition to occur. This is the only time in the scan mode of operation that an I2 interrupt occurs without prior occurrence of an I1 interrupt.

Scanning Near the End of Tape

The end-of-tape detection causes no special action other than the setting of the end-of-tape signal. If the end of information is not indicated by an end-of-file record, the program should check the end-of-tape signal before scanning forward over each record.

E. SPACE AND REWIND

E-1. SPACING

Space Forward or Reverse, One Record

To space one record, the tape is started forward (or reverse, as desired) in a scan mode, and the program waits for the buffer to be ready or for the I2 interrupt. The I1 interrupt should be ignored by executing a WIM instruction to a dummy location, and then executing the BRU indirect to clear the interrupt channel. When the I2 interrupt occurs, or when the buffer is ready, the tape will have been stopped in the gap following the record over which the space was executed.

Space More Than One Record

To space more than one record, another scan EOM instruction should be executed when the I1 interrupt occurs indicating the detection of gap. This may be repeated until the desired number of records has been spaced over. The end of file, however, will require special consideration when spacing over a file of unknown length. The user may wish to program a check for end of file when spacing.

E-2. REWINDING

A tape unit may be started in rewind at any time as long as the unit is ready. This operation does not use the buffer or the tape control unit. Any or all tape units may be rewound while any input/output operation (on tape units or other devices) is in progress. The rewind instruction REWW is an EOM (02 14016 for tape unit 6 on the W buffer). Once started, the tape will continue in rewind until the beginning of tape is sensed. It then stops and after one second (to allow the drive capstans to return to normal speed) the unit ready signal is set.

F. SUMMARY OF TAPE OPERATION CODES

F-1. TEST CONDITIONS

Mnemonic	Description	Buffer	Coding
TRTW n	Skip if tape unit n is not ready	W	SKS 1041n
TRTY n		Y	SKS 1051n
FPTW n	Skip if tape unit n not file protected	W	SKS 1401n
FPTY n		Y	SKS 1411n
BTTW n	Skip if tape unit n not at beginning of tape	W	SKS 1201n
BTTY n		Y	SKS 1211n
ETTW n	Skip if tape unit n not at end of tape	W	SKS 1101n
ETTY n		Y	SKS 1111n
DT2W n	Skip if tape unit n not at 200bpi density	W	SKS 1621n
DT2Y n		Y	SKS 1631n
DT5W n	Skip if tape unit n not at 556bpi density	W	SKS 1661n
DT5Y n		Y	SKS 1671n
DT8W n	Skip if tape unit n not at 800bpi density	W	SKS 1721n
DT8Y n		Y	SKS 1731n
TFTW	Skip if not end of file	W	SKS 13610
TFTY		Y	SKS 13710
TGTW	Skip if not gap	W	SKS 12610
TGTY		Y	SKS 12710

F-2. TAPE FUNCTIONS

Mnemonic	Description	Buffer	Coding
WTBW n,4	Write in binary on tape unit n	W	EOM 0365n
WTBY n,4	4-characters per word	Y	EOM 0375n
WTDW n,4	Write in decimal (BCD) on tape unit n	W	EOM 0265n
WTDY n,4	4-characters per word	Y	EOM 0275n
ETW n,4	Erase tape on tape unit n (Binary or BCD	W	EOM 0367n
ETY n,4	has no effect on erase)	Y	EOM 0377n
ETRW n,4	Erase tape reverse on tape unit n	W	EOM 0767n
ETRY n,4	4-characters per word	Y	EOM 0777n
RTBW n,4	Read in binary on tape unit n	W	EOM 0361n
RTBY n,4		Y	EOM 0371n
RTDW n,4	Read in decimal (BCD) on tape unit n	W	EOM 0261n
RTDY n,4		Y	EOM 0271n
SFBW n,4	Scan forward in binary on tape unit n	W	EOM 0363n
SFBY n,4		Y	EOM 0373n

Mnemonic	Description	Buffer	Coding
SRBW n,4	Scan reverse in binary on tape unit n	W	EOM 0763n
SRBY n,4		Y	EOM 0773n
SFDW n,4	Scan forward in decimal (BCD) on tape	W	EOM 0263n
SFDY n,4	unit n	Y	EOM 0273n
SRDW n,4	Scan reverse in decimal (BCD) on tape	W	EOM 0663n
SRDY n,4	unit n	Y	EOM 0673n
REWW n	Rewind tape unit n	W	EOM 1401n
REWY n		Y	EOM 1411n
RTSW	Convert read to scan. (Same instruction	W	EOM 14000
RTSY	as terminate output, TOPW or TOPY.)	Y	EOM 14100
SRRW	Skip remainder of record	W	EOM 13610
SRRY		Y	EOM 13710

LOGIC DESCRIPTION
W BUFFER (910, 920)
MAGNETIC TAPE SYSTEMS

Models: 9246A, 92461A, 92462A, 92463A,
9246P, 92461P, 92462P, 92463P,
9248, 92481, 92482, 92483 and 9348

SDS 900517A October 1964

SCIENTIFIC DATA SYSTEMS/1649 Seventeenth Street/Santa Monica, California/UP 0-5471

©1964 Scientific Data Systems

Printed in I

PREFACE

The following paragraphs describe the special input/output functions performed by the W Buffer (part of SDS 910 or 920 Computer) when operating with Magnetic Tape Systems comprised of Models 9246A, 9246P, 92461A, 92461P, 92462A, 92462P, 92463P, 9346A, 9248, 92481, 92482, 92483, 9348.

A. READ/SCAN FORWARD

A read/scan forward process is accomplished by executing an EOM0361X (i.e., read with 4 characters/word). After the first two characters are read, W0 is set.

sW0 = $\overline{W9}$ W6 $\overline{W8}$ Ecw + - - -

After 4 characters have been read, (I1w) is generated.

(I1w) = $\overline{Wf}$ W0 $\overline{Wh}$ (En + (En)) ($\overline{Iw}$) ($\overline{Ew}$)

This interrupt causes the computer to execute a WIM which sets Wf, W7, and W8.

sWf = - - - + Wx (T5 - T0)

Upon examination of the first word (4 characters), the program determines if this is the desired block. If it is, the established command (EOM0361X) is permitted to continue. If it is determined that this is not the block being scanned for, the program executes an EOM14000. This EOM sets W10, converting the read to a scan, and W8 is locked on.

sW10 = - - - + Ioc C12 $\overline{W9}$ $\overline{C17}$ $\overline{C20}$

sW8 = $\overline{W7}$ $\overline{W9}$ W10 W11 $\overline{Wh}$ + - - -

Flip-flop Wf can no longer be reset in the usual manner and (I1w) signals are not generated in the normal manner.

rWf = - - - + $\overline{W7}$ $\overline{W8}$ W4 (T22-T17)

(I1w) = $\overline{Wf}$ W0 $\overline{Wh}$ (En + (En)) ($\overline{Iw}$) ($\overline{Ew}$)

The remainder of the block shuffles through the buffer. When the gap is detected, Wf is reset and (I1w) is generated.

rWf = - - - + $\overline{W9}$ W10 W11 W0 (Mtg) $\overline{W7}$ (T22-T17)

(I1w) = $\overline{Wf}$ W0 $\overline{Wh}$ (En + (En)) ($\overline{Iw}$) ($\overline{Ew}$)

The scan may be converted back to a read by executing an EOM0361X which sets the buffer back to a read status. (Note: Because the tape unit is running, the EOM0361X is locked out from having adverse effects on the magnetic tape unit timing). By executing the EOM0361X, W10 is reset, W0 is reset, and the character counter is unlocked. Wf is set and (I1w) is released.

rW10 = Wc

rW0 = Wc + - - -

sW8 = - - - + $\overline{W7}$ $\overline{W9}$ W10 W11 $\overline{Wh}$

sWf = - - - + Wc $\overline{Wh}$

(I1w) = $\overline{Wf}$ W0 $\overline{Wh}$ (En + (En)) ($\overline{Iw}$) ($\overline{Ew}$)

Because W0 is reset the tape unit cannot stop.

B. SCAN FORWARD

A scan forward also may be accomplished by executing an EOM0363X (i.e., scan with 4 characters/word). After the first two characters are read W0 is set, and W8 is locked on.

sW0 = $\overline{W9}$ W6 $\overline{W8}$ Ecw + - - -

sW8 = $\overline{W7}$ $\overline{W9}$ W10 W11 $\overline{Wh}$ + - - -

Flip-flop Wf cannot be reset in the usual manner and I1w signals are not generated in the normal manner.

rWf = - - - + $\overline{W7}$ $\overline{W8}$ W4 (T22 - T17)

(I1w) = $\overline{Wf}$ W0 $\overline{Wh}$ (En + (En)) ($\overline{Iw}$) ($\overline{Ew}$)

The data shuffles through the buffer (the last 4 characters remain in the buffer). Upon the detection of the gap Wf is reset and (I1w) is generated.

rWf = - - - + $\overline{W9}$ W10 W11 W0 (Mtg) $\overline{W7}$ (T22 - T17)

(I1w) = $\overline{Wf}$ W0 $\overline{Wh}$ (En + (En)) ($\overline{Iw}$) ($\overline{Ew}$)

The scan may be stopped (e.g., based on a block counting subroutine) by not resetting W0; however, a WIM must be executed to release the (I1w) interrupt.

sWf = Wx (T5 - T0) - - -

If the scan is to continue, executing an EOM0363X resets W0, sets Wf, and unlocks W8.

rW0 = + - - - Wc

sWf = Wc $\overline{Wh}$ + - - -

sW8 = $\overline{W7}$ $\overline{W9}$ W10 W11 $\overline{Wh}$ + - - -

The scan process repeats; W0 is set after reading the first two characters of the next block.

C. FILE MARKER FUNCTIONS

On a read/scan forward (EOM0361X), a file marker causes the following: both characters are read, the gap between characters is recognized because W0 is not set, and the program is not interrupted.

sW0 = + - - - + $\overline{W9}$ W6 $\overline{W8}$ Ecw

(I1w) = $\overline{Wf}$ W0 $\overline{Wh}$ (En + (En)) ($\overline{Iw}$) ($\overline{Ew}$)

The second character sets W0 as the character counter indicates W7 $\overline{W8}$. Because the character counter is not down counted to $\overline{W7}$ $\overline{W8}$, Wf remains set and (I1w) does not interrupt. Because W0 is set the tape unit will halt and set Wh.

sWh = (Whs) T24 + - - -

This permits the character counter to down count and Wf is reset.

sW4 = Wh T24 + - - -

rWf = - - - + $\overline{W7}$ $\overline{W8}$ W4 (T22 - T17)

Interrupt signal (I2w) is generated.

(I2w) = $\overline{Wf}$ Wh (En + (En))

The (I2w) interrupt must be interpreted by the program to determine its cause (i.e., no (I1w) signals received).

In a scan forward mode (EOM0363X), a file marker causes the following sequence: both characters are read, the gap between characters is not recognized because W0 is not set, nor is Wf reset.

sW0 = + - - - $\overline{W9}$ W6 $\overline{W8}$ Ecw

rWf = + - - - $\overline{W9}$ W10 W11 W0 (Mtg) $\overline{W7}$ (T22 - T17)

The second character sets W0 as the character counter indicates W7 $\overline{W8}$. Because the character counter is not down counted to $\overline{W7}$ $\overline{W8}$, Wf remains set. Because the second character converted the character count from W7 $\overline{W8}$ to $\overline{W7}$ W8, the character counter is locked up.

sW8 = $\overline{W7}$ $\overline{W9}$ W10 W11 $\overline{Wh}$ + - - -

A gap after the second character generates an (I1w) because Wf is reset.

rWf = - - - + $\overline{W9}$ W10 W11 W0 (Mtg) $\overline{W7}$ (T22 - T17)

(I1w) = $\overline{Wf}$ W0 $\overline{Wh}$ (En + (En)) ($\overline{Iw}$) ($\overline{Ew}$)

The interrupt must be interpreted (i.e., counted as if a block had been read or the characters must be inspected for file marker uniqueness).

The scan is continued by executing another EOM0363X which resets W0. If the scan is to be ended, then a WIM is executed to set Wf and release (I1w) . Because W0 is left set, the tape halts and Wh is set.

sWf = Wx (T5 - T0) + - - -

sWh = (Whs) T24 + - - -

With Wh set, the character counter is down counted, Wf is reset, (I2w) is generated, and the W buffer is cleared.

sW4 = Wh T24 + - - -

rWf = $\overline{W9}$ W10 W11 W0 (Mtg) $\overline{W7}$ (T22 - T17) + - - -

(I2w) = $\overline{Wf}$ Wh (En + (En))

D. SCAN REVERSE

A scan reverse process is accomplished by executing an EOM 0763X. The first character may be the longitudinal check character but the gap following has no effect as W0 is not set. The second character received by the buffer sets W0 and locks W8.

sW0 = $\overline{W9}$ W6 $\overline{W8}$ Ecw + - - -

sW8 = $\overline{W7}$ $\overline{W9}$ W10 W11 $\overline{Wh}$ + - - -

With W8 locked, (I1w) signals are not generated in the normal manner because Wf is not permitted to reset. The characters shuffle through the buffer.

rWf = - - - + $\overline{W7}$ $\overline{W8}$ W4 (T22 - T17)

(I1w) = $\overline{Wf}$ W0 $\overline{Wh}$ (En + (En)) ($\overline{Iw}$) ($\overline{Ew}$)

Upon detection of the gap Wf is permitted to reset, and an (I1w) is generated.

rWf = - - - + $\overline{W9}$ W10 W11 W0 (Mtg) $\overline{W7}$ (T22 - T17)

(I1w) = $\overline{Wf}$ W0 Wh (En + (En)) ($\overline{Iw}$) ($\overline{Ew}$)

The (I1w) causes a program interrupt, and by execution of a WIM the last four characters read (actually the first word of the block) are inspected. If the scan is to halt, the program does not take any further action, leaving W0 set.

The WIM sets Wf to turn off the (I1w) interrupt.

sWf = Wx (T5 - T0) + - - -

(I1w) = $\overline{Wf}$ W0 $\overline{Wh}$ (En + (En)) ($\overline{Iw}$) ($\overline{Ew}$)

Because W0 is left set, the tape unit may halt. When (Whs) is generated Wh is set.

sWh = (Whs) T24 + - - -

Flip-flop Wf is reset by down counting the character counter.

sW4 = Wf T24 W5 + - - -

rWf = $\overline{W7}$ $\overline{W8}$ W4 (T22 - T17)

With Wh set and Wf reset, (I2w) is generated.

(I2w) = $\overline{Wf}$ Wh (En + (En))

Interrupt signal (I2w) indicates that the tape is halted and the reverse scanned block located. If it is desired to continue the scan, the program executes an EOM0763X again causing W0 to be reset.

rW0 = Wc + - - -

With W0 reset, Wf cannot be reset by the gap.

rWf = - - - + $\overline{W9}$ W10 W11 W0 (Mtg) $\overline{W7}$ (T22 - T17)

The EOM sets up the character count, W7 W8, and the scan continues. Reverse scan is the same as forward scan with respect to the file mark.

E. W BUFFER LOGIC

E-1. UNIT ADDRESS REGISTER

sW14 = Ws C23

rW14 = Wc

sW13 = Ws C22

rW13 = Wc

sW12 = Ws C21 + (Kf)

rW12 = Wc

sW11 = Ws C20

rW11 = Wc

sW10 = Ws C19 + Ioc $\overline{C17}$ $\overline{W9}$ $\overline{C20}$ C12

rW10 = Wc

E-2. INPUT-OUTPUT

sW9 = Ws C18

rW9 = Wc

E-3. CHARACTER COUNTER

sW8=Ws C16+W7 $\overline{W8}$ W4 T0+ Wx T24 $\overline{W4}$ W w

+ $\overline{W7}$ $\overline{W9}$ W10 W11 $\overline{Wh}$ + (St)

rW8 = Wc (T22 - T17) + W8 W4 T0

sW7 = Ws C15 + Wx T24 W4 Wn + (St)

rW7 = Wc (T22 - T17) + W7 $\overline{W8}$ W4 T0

E-4. CLOCK COUNTER

Clock Detector

sW6 = $\overline{W5}$ Ecw (T22 - T17)

rW6 = W5 T0 + Wc

Precess Detector

sW5 = $\overline{W5}$ W6 $\overline{Ecw}$ T0 + Ws C13 C18

rW5 = W4 T0 + Wc

Precess W

sW4 = W5 Wf T24 + Ws T0 + Wh T24 + (St) T0

rW4 = W4 T0 + W4 T24

E-5. COMPUTER INTERLOCK

sWf = Wc Wh + Wx (T5 - T0)

rWf = $\overline{W8}$ $\overline{W7}$ W4 (T22 - T17) + Ws W9

+ $\overline{W9}$ W10 W11 W0 (Mtg) $\overline{W7}$ (T22 - T17)

E-6. INTERRUPT SIGNALS

(I1w) = $\overline{Wf}$ W0 $\overline{Wh}$ (En + (En)) ($\overline{Iw}$ $\overline{Ew}$)

(I2w) = $\overline{Wf}$ Wh (En + (En))

E-7. TIME SHARE CALLING SIGNAL

Tsw = $\overline{Wf}$ W0 $\overline{Wh}$ (Iw)

E-8. HALT DETECTOR

sWh = Whs T24 + W9 $\overline{W11}$ $\overline{W0}$ W5 $\overline{W6}$ T24

+ $\overline{W9}$ $\overline{W10}$ $\overline{W11}$ W12 $\overline{W13}$ ($\overline{R1}$ $\overline{R2}$ $\overline{R3}$ $\overline{R4}$ $\overline{R5}$ $\overline{R6}$ $\overline{Rp}$) W5 T24

rWh = Wc

E-9. ERROR DETECTOR

sWe=$\overline{W9}$W4$\overline{Rp}$(T5-T0)$\overline{Wh}$ (Np) +W0$\overline{W6}$W5Ecw Tp+Wes

rWe = Wc $\overline{Wh}$

E-10. CHARACTER BUFFER

sR1=W4Wn$\overline{Wx}$($\overline{Tp}$ $\overline{T24}$) + $\overline{W9}$W6$\overline{W5}$Zw1+W4 Wx C23

rR1=W4$\overline{Wn}$$\overline{Wx}$+$\overline{W9}$$\overline{W6}$$\overline{W5}$$\overline{W4}$+W9$\overline{W4}$W5$\overline{W6}$

+ W9 W10 W11 + W4 Wx $\overline{C23}$

sR2 = W4 R1 + $\overline{W9}$ W6 $\overline{W5}$ Zw2

rR2 = W4 $\overline{R1}$ + $\overline{W9}$$\overline{W6}$$\overline{W5}$$\overline{W4}$ + W9$\overline{W4}$W5$\overline{W6}$+W9W10W11

sR3 = W4 R2 + $\overline{W9}$ W6 $\overline{W5}$ Zw3

rR3=W4 R2 + $\overline{W9}$ $\overline{W6}$ $\overline{W5}$ W4 + W9 $\overline{W4}$ W5 $\overline{W6}$ + W9W10W11

sR4 = W4 R3 + $\overline{W9}$ W6 $\overline{W5}$ Zw4

rR4 =W4 $\overline{R3}$ + $\overline{W9}$ $\overline{W6}$ $\overline{W5}$ $\overline{W4}$ + W9 $\overline{W4}$ W5 $\overline{W6}$ + W9W10W11

sR5 = W4 R4 + $\overline{W9}$ W6 $\overline{W5}$ Zw5

rR5=W4$\overline{R4}$+$\overline{W9}$$\overline{W6}$$\overline{W5}$$\overline{W4}$+W9$\overline{W4}$W5$\overline{W6}$+W9W10W11

sR6 = W4 R5 + $\overline{W9}$ W6 $\overline{W5}$ Zw6

rR6 = W4$\overline{R5}$+$\overline{W9}$$\overline{W6}$$\overline{W5}$$\overline{W4}$ + W9$\overline{W4}$W5$\overline{W6}$ + W9 W10 W11

sRp = $\overline{W9}$W4$\overline{Rp}$Ww(T22-T17)+ W9W4$\overline{Rp}$Wn(T5-T0)$\overline{Wx}$

+$\overline{W9}$W6$\overline{W5}$Zwp+W9W4(T22-T17)+W9W4$\overline{Rp}$C23(T5-T0) Wx

rRp =$\overline{W9}$W4RpWw(T22-T17)+W9W4RpWn(T5-T0)$\overline{Wx}$

+$\overline{W9}$$\overline{W6}$$\overline{W5}$$\overline{W4}$+W9$\overline{W4}$W5$\overline{W6}$+W9W10W11

+W9W4RpC23 (T5-T0) Wx

E-11. LOAD W FROM C

Wx = ($\overline{01}$ 03 $\overline{04}$ 05 $\overline{06}$ F1 $\overline{F3}$) $\overline{Ts}$ + Wp Ts

E-12. CLOCK SIGNAL

Ecw = $\overline{(Ecw)}$

E-13. CHARACTER INPUTS

(Zw1) = (R1t) + (R1r) + (R1m) + - - -

(Zw2) = (R2t) + (R2r) + (R2m) + - - -

(Zw3) = (R3t) + (R3r) + (R3m) + - - -

(Zw4) = (R4t) + (R4r) + (R4m) + - - -

(Zw5) = (R5t) + (R5r) + (R5m) + - - -

(Zw6) = (R6t) + (R6r) + (R6m) + - - -

(Zwp) = (Rpt) + (Rpr) + (Rpm) + - - -

E-14. BUFFER REGISTER

sWw = W4 R6

+ W4 Tp W8

+ W4 T24 W7

+ ($\overline{T24}$ $\overline{Tp}$) $\overline{W4}$ Wx C23 + (T24 + Tp) $\overline{W4}$ Wn

+ $\overline{W4}$ Wn $\overline{Wx}$

rWw = ($\overline{sWw}$)

sWn = Ww delayed by 24 pulse times

rWn = $\overline{Ww}$ delayed by 24 pulse times

E-15. CLEAR AND SET SIGNALS

Wc = Buc $\overline{C17}$ (T22 - T17) + Wh $\overline{Wf}$ T0 + (St) (T5 - T0)

Ws = Buc $\overline{C17}$ (T5 - T0)

W Buffer Ready = $\overline{W9}$ $\overline{W10}$ $\overline{W11}$ $\overline{W12}$ $\overline{W13}$ $\overline{W14}$

WIM and MIW interlock = $\overline{Wf}$ (W0 + $\overline{W9}$)

E-16. HALT INTERLOCK

sW0 = $\overline{W9}$ W6 $\overline{W8}$ Ecw + Ws W9

rW0 = Wc + Ioc C12 $\overline{C17}$ $\overline{C20}$ W9 + W9 (Iwf) (T5 - T0)

E-17. MAGNETIC TAPE CONTROL SIGNALS

Stop Read Interlock = W0

Output Character Interlock = $\overline{W5}$

LOGIC DESCRIPTION
MAGNETIC TAPE SYSTEMS

Models: 9246A, 92461A, 92462A,
9246P, 92461P, 92462P,
9248, 92481 and 92482

SDS 900518B August 1965

SCIENTIFIC DATA SYSTEMS/1649 Seventeenth Street/Santa Monica, California/UP 1-0960

©1964, 1965 Scientific Data Systems, Inc.

Printed in U.S.A.

CONTENTS

Page

LOGIC DESCRIPTION 1

A. General 1
B. Selection and Starting 1
C. Rewind 2
D. Photosensing 3
E. Beginning and End-of-Reel Control 3
F. Density Select 4
G. Test to Sio 4
H. Magnetic Tape Control Timing 5
J. Character Recording 13
K. Character Reading 16
L. Data Translation 21
M. Error Detector, Wes 22
N. Tape Mark Detect 24
P. Read Inhibit 24
Q. Gap Interrupt Enable 24
R. Test Mode 24

TABLES

1 Character Code Conversion Chart 23
2 Glossary of Logic Terms used in 9246 Magnetic Tape Electronics Unit 25
3 Glossary of Logic Terms used in 9248 Magnetic Tape Control Unit 27

FIGURES

1 Magnetic Tape Read, 41.7 Kc, Data Flow Diagram 30
2 Magnetic Tape Write, 41.7 Kc, Data Flow Diagram 30
3 Magnetic Tape Write or Erase, 41.7 Kc, Initial Start Forward 30
4 Magnetic Tape Read or Scan, 41.7 Kc, Initial Start Forward 31
5 Magnetic Tape Read or Scan, 41.7 Kc, Initial Start Reverse 31
6 Magnetic Tape Erase, 41.7 Kc, Initial Start Reverse 32
7 Magnetic Tape Read or Write, 41.7 Kc, Forward Operation Termination 32
8 Magnetic Tape Read, 41.7 Kc, Reverse Operation Termination 33
9 Magnetic Tape Write, 41.7 Kc, Forward Continue 33
10 Magnetic Tape Read, 41.7 Kc, Forward Continue 34
11 Magnetic Tape Read, 41.7 Kc, Reverse Continue 34
12 Magnetic Tape Read, 41.7 Kc 35
13 Magnetic Tape Write, 41.7 Kc 35
14 Magnetic Tape Write, 41.7 Kc, Terminate Output 36
15 Magnetic Tape Read, 41.7 Kc, Read Amplifier Signals 36

LOGIC DESCRIPTION
MAGNETIC TAPE SYSTEMS
Models 9246A, 92461A, 92462A, 9246P, 92461P, 92462P, 9248, 92481, and 92482

A. GENERAL

A basic knowledge of the logic used in SDS 900 Series Computers is essential to readily understand the logic used in implementing magnetic tape system functions. General description of the mechanization of magnetic tape unit commands and control signals, when operated in the AUTOMATIC mode, is contained in paragraphs B through R. For purposes of discussion and brevity, many logic equations are used showing only part of their gate mechanizations. A complete listing of the Tape Control Unit logic and the Electronics Unit logic is contained in Part V of this manual.

The 9246 Electronics Unit series contains input/output circuits which are designed to operate at a write-read density of 800 bits per inch. The two recording densities of 200 and 556 bits per inch are used in Models 9246A, 9246P, 92461A, and 92461P Magnetic Tape Systems, and the additional 800 bpi circuits are used in the 92463A and 92463P systems.

Timing diagrams of the magnetic tape commands are included in Figures 1 through 15 near the end of this section. These diagrams illustrate the timing sequence relationship of signals received from the computer and those generated in the magnetic tape logic and control circuits. Frequent reference to these diagrams enables the reader to readily visualize actions that take place within the logic and control circuits at specified times. The diagrams are based on 41.7Kc operation but the timing relationships hold true for other frequencies.

Definitions of logic terms used in magnetic tape unit circuits are given in Tables 2 and 3 at the end of this section. Complete logic diagrams showing connector and pin locations of signals are included in Part V of this manual.

The logic description pertains to the operation of the 9246A, 9246P, 92461A, 92461P, 92462A, 92462P, 9248, 92481, and 92482 units as used in conjunction with the W Buffer, but the same logic is equally applicable for use with the Y Buffer and for the 900 as well as the 9000 Series Computers.

B. SELECTION AND STARTING

B-1. MAGNETIC TAPE COMMANDS

A magnetic tape process is selected and started by executing an appropriate EOM command. A summary of these commands is given in Part II of this manual, Programming, paragraph F.

B-2. STARTING

For most tape processes a generalized start command is generated:

$$M\ start = Buc\ \overline{C17}\ C20$$

M start is also generated for any operation which is to be continued. As rewind on one tape unit may occur simultaneously with any process on another tape unit, a separate control command is generated:

$$M\ control = Ioc\ \overline{C17}\ C20$$

In addition, M control is utilized to control several specialized functions during processes commenced by M start.

B-3. CONTROL TIMER, D1

The Control Timer, D1, is triggered to provide a delay for any forward process in which the tape is initially starting from rest.

$$sD1 = (M\ start\ Q2\ \overline{C12}\ \overline{Mf}\ \overline{Mr})\ dc + - - -$$

$$rD1 = 4.7\ ms\ after\ sD1$$

where $\overline{C12}$ designates a forward operation and $\overline{Mf}\ \overline{Mr}$ indicates that the tape is presently at rest.

B-4. CONTROL TIMER, D4

The Control Timer, D4, is triggered to provide a delay to the Halt Signal, Whs.

$$sD4 = (M\ start\ Q2\ \overline{Mf}\ \overline{Mr})\ dc$$

$$rD4 = 14\ ms\ after\ sD4$$

$$Whs = W11\ \overline{D1}\ \overline{D2}\ \overline{D3}\ \overline{D4}\ \overline{Dt}\ \overline{Mf}\ \overline{Mr}$$

This is included to prevent the computer from exceeding the start-stop program limitations of the tape transport on exceedingly short repetitive records.

B-5. FORWARD AND REVERSE CONTROLS

The Forward Control Flip-flop, Mf, is set for forward operations, and the Reverse Control Flip-flop, Mr, is set for reverse operations:

$$sMf = \underline{M\ start\ Q2}\ \overline{C12}\ \overline{Mf}\ \overline{Mr}$$

$$rMf = (Mcr)\,dc$$

$$sMr = \underline{M\ start\ Q2}\ C12\ \overline{Mf}\ \overline{Mr}$$

$$rMr = (Mcr)\,dc$$

where:

$$Mcr = - - - + \overline{W11}\ \overline{M\ start}$$

B-6. DATA MODE SELECT

A Data Mode Select Flip-flop, Me, permits reading or recording in a BCD or binary mode:

$$sMe = \underline{M\ start\ Q2}\ \overline{C14}\ \overline{Me}$$

$$rMe = \underline{M\ start\ Q2}\ C14\ Me + (Mcr)\ dc$$

where:

$$Mcr = - - + \overline{W11}\ \overline{M\ start}$$

If Me is set, data read or to-be-recorded is processed as BCD information with even parity; if Me is reset, data read or to-be-recorded is processed as binary information with odd parity.

B-7. TAPE UNIT SELECT

Each tape unit contains a Tape Unit Select Flip-flop, Ma, which is set at the beginning of a tape process and remains set until the process is completed.

$$sMa = (\underline{M\ start\ Q2})\ \text{Ready (Unit Select)}\ \overline{Ma}$$

$$rMa = (Whs + \overline{(Ready)}\ )\ dc$$

Setting of Ma is controlled by a Ready signal to permit selection only if the tape unit is in the ready condition. The READY status is indicated on the Auxiliary Control Panel.

$$Ready = \overline{Ma}\ \overline{Mb}\ \overline{Dr}\ (Ready)$$

A tape unit is ready if it is not selected, Ma; not in the process of rewind, $\overline{Mb}\ \overline{Dr}$; and if the tape handler interlocks are properly set providing the signal (Ready) .

$$(Ready) = \text{Tape Transport Ready}$$

Where: tape transport ready is a signal from the tape transport indicating it is in automatic and ready to accept commands.

The Unit Select signal permits setting of Ma only if coincidence is established between the EOM unit address bits C21, C22, and C23 and the tape UNIT SELECT switch on the Auxiliary Control Panel. If the tape UNIT SELECT switch designates the tape unit as unit 5, for example, the EOM command to set Ma5 must contain C21 $\overline{C22}$ C23.

$$\text{Unit Select} = Kc21\ Kc22\ Kc23\ (Ready)$$

where Kc21, Kc22, and Kc23 are UNIT SELECT switch controlled combinations of the address bits C21, C22, and C23.

B-8. FORWARD AND REVERSE ACTUATE

Tape motion is achieved for the addressed tape handler by:

$$\text{Forward Actuate} = Ma\ Mf\ \overline{Test}$$

$$\text{Reverse Actuate} = Ma\ Mr\ \overline{Test} + Mb\ \overline{Test}$$

Test inhibits all tape motion. This is a switch controlled signal which defines a test mode used in maintaining and trouble-shooting the system. Forward motion is achieved if a forward operation is defined, Mf, and if the Tape Unit Select flip-flop, Ma, is set. Reverse motion is achieved if a reverse operation is defined, Mr, and if Tape Unit Select flip-flop, Ma is set, or if a rewind, Mb, is indicated.

B-9. READ AND WRITE ACTIVATE

Upon addressing a tape unit the tape unit select flip-flop, Ma, enables the read signals R6a through Rpa to be coupled to the Tape Control Unit, and if a write operation is required, a Write Activate signal is generated.

$$\text{Write Activate} = W9\ W11\ Ma\ \overline{Test}$$

W9 W11 defines a magnetic tape write, Ma indicates that the tape unit has been selected, and $\overline{Test}$ precludes writing on tape while in the rest mode.

Write amplifier voltage is interlocked with the File Protect Ring in the tape supply reel.

$$+25\ \text{volts Write} = K3\ \text{energized}$$

$$K3\ \text{set} = \overline{\text{File Protect}}$$

The File Protect status is indicated on the Auxiliary Control Panel.

C. REWIND

Each tape unit may be signalled to start a rewind by executing an EOM1401X. The unit must be in the Ready state.

$$sMb = \underline{M\ control\ C12\ \overline{C16}\ \overline{Bor}}\ \text{Ready}$$

$$(\text{Unit Select})\ \overline{Mb}$$

A rewind may occur upon execution of the EOM; i.e., M control C12 $\overline{C16}$ if the unit is selected, is Ready, and is not already positioned at the Load Point.

$$Ready = \overline{Ma}\ \overline{Mb}\ \overline{Dr}\ (Ready)$$

$$\text{Unit Select} = Kc21\ Kc22\ Kc23\ (Ready)$$

Upon setting Mb a Reverse Actuate signal is generated:

$$\text{Reverse Actuate} = Mb\ \overline{Test} + - - -$$

Rewind cannot occur if the unit is in a Test mode, although Mb is permitted to set. The Rewind Speed Select relay on the Auxiliary Control Panel is energized to provide a contact closure to the tape transport for increasing the capstan speed during rewind.

$$K1\ \text{set} = Mb$$

Rewind proceeds until the Load-Point, Bor, is detected. A Rewind Stop Delay timer, Dr, is set upon detection of Bor to permit capstan deceleration.

$$sDr = Mb\ Bor\ \overline{Mca}$$

Rewind Control flip-flop is reset, thus stopping the tape:

$$rMb = \underline{Mca}\ Dr\ Mb + - - -$$

$$\text{Reverse Actuate} = Mb\ \overline{Test}$$

The capstan is permitted to decelerate for 1.0 second to reach normal speed.

$$rDr = 1.0 \text{ second after } sDr$$

The tape unit is then permitted to become Ready.

$$Ready = \overline{Ma}\ \overline{Mb}\ \overline{Dr}\ (Ready)$$

D. PHOTOSENSING

In the MANUAL mode, photoelectric sensing of the reflective markers permits stopping of the tape with the photosense assembly positioned over the reflective marker. Photoelectric sensing of the Load-Point reflective markers when in the AUTOMATIC mode, will stop the tape with the photosense assembly positioned over the reflective marker. In the AUTOMATIC mode, photoelectric sensing of the End-of-Reel reflective marker is detected, but stopping of the tape is under program control. Should the program desire to go beyond the reflective marker, evidence that the marker has been passed is retained.

D-1. AMPEX TM-4 MAGNETIC TAPE TRANSPORT

Excitation voltage for the photosense lamp is obtained from the Photosense Circuit Board, TB2, in the Auxiliary Control Unit. Voltage is a nominal +5.7 volts.

Outputs from the photocells are routed to two photosense amplifiers on the HX20-0 module in location 5S of the tape electronics unit. Outputs to the amplifiers are Photosense "A" representing Load-Point, and Photosense "B" representing End-of-Reel. Outputs from the photosense amplifiers, (Bor) for Load-Point and (Eor) for End-of-Reel, are true upon detection of the appropriate reflective marker.

D-2. POTTER MT-120 MAGNETIC TAPE TRANSPORT

As the Potter MT-120 Tape Transport supplies amplified photosense signals, the HX20-0 Module in location 5S is removed and the amplified signals are routed directly to (Bor) and (Eor) outputs.

E. BEGINNING AND END-OF-REEL CONTROL

E-1. BEGINNING AND END-OF-TAPE DETECT TIMER, Debt

While the tape unit is under AUTOMATIC control, encountering the Load-Point or End-of-Reel will trigger the Beginning and End-of-Tape Detect Timer, Debt, and generate a 10-microsecond signal. Triggering of this timer occurs under several circumstances.

During reverse or rewind, when the Load-Point is encountered, Debt is triggered after a one-second delay. The tape, however, stops upon detection of the Load-Point.

$$sDr = Mb\ Bor\ \overline{Mca} + (Mr\ MaB \text{ or } \overline{Bot})\ dc$$

$$rDr = 1.0 \text{ second after } sDr$$

$$rMb = \overline{Mca}\ Dr\ Mb + - - -$$

$$sDebt = \underline{Dr} + - - -$$

$$rDebt = 10 \text{ microseconds after } sDebt$$

Bot is a flip-flop which sets when the Load-Point reflective marker is encountered.

In the course of writing a record, if the End-of-Reel reflective marker is encountered, Debt is triggered.

$$sDebt = \overline{Mca}\ \overline{Eot}\ Eor\ Mf\ Ma + - - -$$

$$rDebt = 10 \text{ microseconds after } sDebt$$

Eot is a flip-flop which sets when the End-of-Reel reflective marker is encountered. Should the tape continue beyond the End-of-Reel reflective marker, Eot will remain set.

Should a reverse operation, or rewind, be initiated and the End-of-Reel reflective marker again be encountered, Debt is again triggered.

$$sDebt = \overline{Mca}\ Eot\ Eor\ (Ma\ Mr + Mb) + - - -$$

$$rDebt = 10 \text{ microseconds after } sDebt$$

E-2. BEGINNING-OF-TAPE FLIP-FLOP, Bot

The Beginning-of-Tape Flip-flop, Bot, is set whenever the Load-Point reflective marker is positioned under the photosense head. In the MANUAL mode, the Bot flip-flop is set or reset by the Bor or $\overline{Bor}$ signal directly. In the AUTOMATIC mode, the flip-flop is set upon the generation of Debt.

$$sBot = \underline{Debt}\ Bor\ \overline{Bot} + (\overline{Ready}\ Bor)\ dc$$

$$rBot = (\overline{Bor})\ dc$$

After a rewind, Bot is not set until the 1.0-second Rewind Stop Delay, Dr, is reset.

$$sDr = Mb\ Bor\ \overline{Mca} + - - -$$

$$rDr = 1.0 \text{ second after } sDr$$

$$sDebt = \underline{Dr} + - - -$$

rDebt = 10 microseconds after sDebt

The status of the Bot flip-flop is denoted by the LOAD POINT indicator on the Auxiliary Control Panel. The status of Bot in each tape unit is tested by the appropriate SKS command.

E-3. END OF TAPE FLIP-FLOP, Eot

In the MANUAL mode the End-of-Tape Flip-flop, Eot, is set whenever the End-of-Reel reflective marker is positioned under the photosense assembly.

$$sEot = (\overline{Ready}\ Eor)\ dc + - - -$$

$$rEot = (\overline{Ready}\ \overline{Eor}\ \overline{Ma})\ dc + - - -$$

In the AUTOMATIC mode, the Eot flip-flop is set whenever the End-of-Reel reflective marker is positioned under the photosense assembly or when the tape has moved beyond the reflective marker. The direction the tape is moving and the previous status of Eot determines the resulting state of Eot.

$$sEot = \underline{Debt}\ Eor\ \overline{Eot} + - - -$$

$$rEot = \underline{Debt}\ Eot\ (Ma\ Mr + Mb) + - - -$$

The status of the Eot flip-flop is denoted by the END of REEL indicator on the Auxiliary Control Panel. In each tape unit the status of Eot is tested by the appropriate SKS command.

E-4. BEGINNING AND END-OF-REEL INTERRUPTS

In the AUTOMATIC mode, for special system applications Beginning (Ib) and End-of-Reel (Ie) Interrupt signals are generated for use with the SDS 9128/9129 Priority Interrupt System.

$$Ib = Debt\ Bor$$

$$Ie = Debt\ Eor\ Mf$$

F. DENSITY SELECT

Provisions are made to operate the tape system at three different recording densities. The DENSITY SELECT switch on the Auxiliary Control Panel permits selection of the desired operating density, 200 bpi, 556 bpi, or 800 bpi, for a tape unit. The normal configuration of the 9246 and 9248 systems permits use of 200 bpi and 556 bpi only; provision is made for 800 bpi by the addition of Buffer Interlace (9121).

$$200\ bpi = Da = Kda\ Ma$$

$$556\ bpi = Db = Kdb\ Ma$$

$$800\ bpi = Dc = Kdc\ Ma$$

Where:

Kda, Kdb and Kdc are DENSITY SELECT switch controlled signals. Da, Db and Dc are sent to the Tape Control Unit. Da, Db and Dc are qualified by Ma such that for the tape unit addressed, Ma, its appropriate density setting is utilized. It is thus permissible, in multiple tape unit systems, to have tape units with individually designated densities.

The status of the DENSITY SELECT switch in each tape unit is tested by an appropriate SKS command.

G. TEST TO $\overline{Sio}$

Each tape unit can be tested for File Protect (SKS1401X), Ready (SKS1041X), Load-Point (SKS1201X), End-of-Reel (SKS1101X), 200 bpi Density Select (SKS1621X), 556 bpi Density Select (SKS1661X) and 800 bpi Density Select (SKS1721X).

$$\overline{Siot} = C12\ \overline{C16}\ (Unit\ Select)\ File\ Protect$$

$$+ C13\ \overline{C16}\ (Unit\ Select)\ Bor$$

$$+ C14\ \overline{C16}\ (Unit\ Select)\ Eot$$

$$+ C15\ \overline{C16}\ (Unit\ Select)\ Ready$$

$$+ C12\ C13\ \overline{C14}\ \overline{C15}\ C16\ (Unit\ Select)\ Kda$$

$$+ C12\ C13\ \overline{C14}\ C15\ C16\ (Unit\ Select)\ Kdb$$

$$+ C12\ C13\ C14\ \overline{C15}\ C16\ (Unit\ Select)\ Kdc$$

The Siot signal from each tape unit is sent to the Tape Control Unit. At the control unit, $\overline{Siot}$ represents test signals from all tape units. Effectively:

$$\overline{Siot} = \overline{Siot0} + \overline{Siot1} + - - - + \overline{Siot7}$$

Where $\overline{Siot0}$ represents $\overline{Siot}$ from the tape unit that has the UNIT SELECT switch set at zero.

Two tests are performed on the tape control unit by the computer. The control unit may be tested for File Mark (SKS13610).

$$\overline{Sio} = \overline{C12}\ C13\ C14\ C15\ C16\ Rtm + - - -$$

Where Rtm is a flip-flop which is set upon starting or continuing an operation, and is reset if the block read is not a File Mark block.

The control unit may be tested for Gap (SKS12610).

$$\overline{Sio} = \overline{C12}\ C13\ \overline{C14}\ C15\ C16\ Mtg\ \overline{Rtm}$$

where:

$$Mtg = D2\ \overline{D5}\ Dt$$

The SKS for gap must be made during a specified interval to determine if the tape should stop or continue its operation. D2 Dt $\overline{D5}$, generated by the Control Timers and the Dt Control flip-flop, defines an interval of about one millisecond during which the gap may be tested and the operation continued. Failure to test gap and to command the tape to continue during this interval results in the tape stopping. Rtm, a flip-flop which is set upon starting or continuing any operation, inhibits the test once a command to continue has been given.

$$sRtm = (M\ start)\ dc$$

The $\overline{Siot}$ signal from the tape units is routed to the computer.

$$\overline{Sio} = \overline{Siot} + - - -$$

$\overline{Sio}$ is permitted to remain true to permit other devices to use $\overline{Sio}$ when the tape system is not being tested.

$$\overline{Sio} = \overline{\overline{C17}\ C20} + - - -$$

H. MAGNETIC TAPE CONTROL TIMING

Data flow diagrams for the read and write processes are shown on Figures 1 and 2. Individual timing diagrams are included for each timing function described in the following paragraphs. The diagrams are given for 41.7Kc but the timing relationships may be used to define 800 bpi timing sequences.

H-1. WRITE OR ERASE FORWARD, INITIAL START

The appropriate Write or Erase Forward EOM initiates the Write or Erase Forward processes (Figure 3). The EOM generates the generalized control command, M start. Forward Control flip-flop, Mf, and Tape Unit Select flip-flop, Ma, are set and the Data Mode Select flip-flop, Me, is set if a BCD operation is required.

$$sMf = \underline{M\ start\ Q2}\ \overline{C12}\ \overline{Mf}\ \overline{Mr}$$

$$sMa = \underline{M\ start\ Q2}\ Ready\ (Unit\ Select)\ \overline{Ma}$$

$$sMe = \underline{M\ start\ Q2}\ \overline{C14}\ \overline{Me}$$

A Forward Actuate signal is generated to engage the forward direction pinch roller.

$$Forward\ Actuate = Ma\ Mf\ \overline{Test}$$

A Write Activate signal is generated to enable the Write Drivers to permit the write or erase function.

$$Write\ Activate = Ma\ W9\ W11\ \overline{Test}$$

To permit the tape unit to accelerate to operational speed and to generate the "half" gap prior to recording, Control Timer D1 is triggered.

$$sD1 = (M\ start\ Q2\ \overline{C12}\ \overline{Mf}\ \overline{Mr})\ dc + - - -$$

$$rD1 = 4.7\ milliseconds\ after\ sD1$$

Control Timer D4 is triggered to delay the generation of Halt signal, Whs, if the block to be recorded, or erased, is of so short a length that succeeding start/stop operations might exceed the maximum program limitations of the tape transport mechanisms.

$$sD4 = (M\ start\ \underline{Q2}\ \overline{Mf}\ \overline{Mr})\ dc$$

$$rD4 = 14\ milliseconds\ after\ sD4$$

$$Whs = W11\ \overline{D1}\ \overline{D2}\ \overline{D3}\ \overline{D4}\ \overline{Dt}\ \overline{Mf}\ \overline{Mr}$$

On write or erase operations, the Rpb flip-flop from the Buffer Register is used to synchronize the fall of D1 with clock signal Mc, which controls the character writing frequency.

$$sRpb = \underline{Ri}\ (W9\ W11\ \overline{Rpb}\ \overline{D1}\ \overline{D2}\ \overline{D3}\ \overline{Dt}\ \overline{Ds}\ \overline{\overline{W0}\ W5\ \overline{W6}\ W9\ W11} + - - -)$$

$$rRpb = (M\ start)\ dc + - - -$$

where:

$$Ri = W9\ W11\ Mc + - - -$$

$\overline{D1}$ indicates that the initial "half" gap has been generated and $\overline{D2}$ $\overline{D3}$ $\overline{Dt}$ $\overline{Ds}$ $\overline{\overline{W0}\ W5\ \overline{W6}\ W9\ W11}$ excludes setting Rpb again after the block has been recorded.

Rpb enables the Clock Detect flip-flop, Rcd, to detect succeeding Clock Signals, Mc, as long as Rpb remains set.

$$sRcd = W9\ W11\ \underline{Mc}\ Rpb\ \overline{Rcd} + - - -$$

Ecm provides the Clock to the W Buffer.

$$Ecm = W11\ \overline{D1}\ \overline{D2}\ \overline{D3}\ \overline{Dt}\ \overline{W5}\ \overline{W6}\ Rcd\ \overline{\overline{W0}\ \overline{Rbi}}\ (Mf + Mr)$$

H-2. READ OR SCAN FORWARD INITIAL START

Appropriate Read or Scan Forward EOM instructions initiate the Read or Scan Forward processes (Figure 4). The EOM generates the generalized control command, M start. The Forward Control flip-flop, Mf, and the Tape Unit Select flip-flop, Ma, are set and the Data Mode Select flip-flop, Me, is set if a BCD operation is required.

$$sMf = \underline{M\ start\ Q2}\ \overline{C12}\ \overline{Mf}\ \overline{Mr}$$

$$sMa = \underline{M\ start\ Q2}\ Ready\ (Unit\ Select)\ \overline{Ma}$$

$$sMe = \underline{M\ start\ Q2}\ \overline{C14}\ \overline{Me}$$

A Forward Actuate signal is generated to engage the forward direction pinch roller.

$$Forward\ Actuate = Ma\ Mf\ \overline{Test}$$

To permit masking out extraneous gap signals Control Time D1 is triggered.

$$sD1 = (M\ start\ Q2\ \overline{C12}\ \overline{Mf}\ \overline{Mr})\ dc + - - -$$

$$rD1 = 4.7\ milliseconds\ after\ sD1$$

$$Ecm = W11\ \overline{D1}\ \overline{D2}\ \overline{D3}\ \overline{Dt}\ \overline{W5}\ \overline{W6}\ Rcd\ \overline{W0\ Rbi}\ (Mf + Mr)$$

Control Timer D4 is triggered to delay the generation of Halt signal, Whs, if the block to be read or scanned is of so short a duration that succeeding start/stop operations might exceed the maximum program limitations of the tape transport mechanisms.

$$sD4 = (M\ start\ Q2\ \overline{Mf}\ \overline{Mr})\ dc$$

$$rD4 = 14\ milliseconds\ after\ sD4$$

$$Whs = W11\ \overline{D1}\ \overline{D2}\ \overline{D3}\ \overline{D4}\ \overline{Dt}\ \overline{Mf}\ \overline{Mr}$$

If the tape is initially started from the Load-Point, Bor, the Load-Point Inhibit flip-flop Rbt is set. The effect of setting Rbt is to inhibit sensing a false clock at the beginning of the tape at the point where the write current is initially applied.

$$sRbt = \underline{Mc}\ Bor\ \overline{Rbt}$$

$$rRbt = \underline{Mc}\ \overline{D4}\ Rbt + (M\ start + Rbi)\ dc$$

If the program rule of writing 3.5 inches of gap is observed when on the Load-Point, then Rbt will reset several inches prior to reading the first record.

During write operations, data is written as soon as Control Timer D1 elapses. On read or scan forward operations, data will occur approximately 8.7 milliseconds after M start. This is caused by the physical displacement of the read and write heads by 0.3 inch delaying the appearance of data at the read head by approximately 4.0 milliseconds (i.e., 0.3"÷75"/sec = 4.0 milliseconds).

Once the recorded information reaches the read head and is sensed (as evidenced by generation of Character Detect Clock signals, Cf) the W Buffer is clocked indicating the presence of characters.

$$Ecm = W11\ \overline{D1}\ \overline{D2}\ \overline{D3}\ \overline{Dt}\ \overline{W5}\ \overline{W6}\ Rcd\ \overline{W0\ Rbi}\ (Mf + Mr)$$

After the W Buffer has received two characters, W0 is set, thereby providing a control signal to commence the read or scan process termination upon detection of gap.

$$sW0 = \overline{W9}\ W6\ \overline{W8}\ Ecw + - - -$$

$$rW0 = Wc + - - -$$

The Gap signal is true upon commencing the read or scan forward process, and is reset upon generation of a Character Detect Clock, Cf. Gap does not become true again until the absence of Cf has been detected for specified durations, depending on the setting of the DENSITY SELECT switch for the tape unit addressed.

Gap = 150 microseconds with no Cf if Da (200 bpi)

+ 54 microseconds with no Cf if Db (556 bpi)

+ 37 microseconds with no Cf if Dc (800 bpi)

The gap initially sensed upon starting a read or scan process is not recognized because W0 is not yet set.

H-3. READ OR SCAN REVERSE, INITIAL START

The appropriate Read or Scan Reverse Eom initiates the Read or Scan Reverse processes (Figure 5). The EOM generates the generalized control command, M start. Reverse Control flip-flop Mr and Tape Unit Select flip-flop Ma are set, and Data Mode Select flip-flop Me is set if a BCD operation is required.

$$sMr = \underline{M\ start\ Q2}\ C12\ \overline{Mf}\ \overline{Mr}$$

$$sMa = \underline{M\ start\ Q2}\ Ready\ (Unit\ Select)\ \overline{Ma}$$

$$sMe = \underline{M\ start\ Q2}\ \overline{C14}\ \overline{Me}$$

A Reverse Actuate signal is generated to engage the reverse direction pinch roller.

$$Reverse\ Actuate = Ma\ Mr\ \overline{Test} + - - -$$

Control Timer D4 is triggered to delay the generation of Halt signal, Whs, if the block to be scanned is of so short duration that succeeding start/stop operations might exceed the maximum program limitations of the tape transport mechanisms.

$$sD4 = (M\ start\ Q2\ \overline{Mf}\ \overline{Mr})\ dc$$

$$rD4 = 14\ milliseconds\ after\ D4$$

$$Whs = W11\ \overline{D1}\ \overline{D2}\ \overline{D3}\ \overline{D4}\ \overline{Dt}\ \overline{Mf}\ \overline{Mr}$$

If the tape system is instructed to scan reverse while positioned on the Load-Point, Bor, a Halt signal is generated.

$$\overline{(Whs)} = \overline{W11\ Mr\ Bor} + - - -$$

With the tape at rest, the read head is positioned such that when a scan reverse is instructed, the data reaches the read head in approximately 4 milliseconds. Once the recorded information reaches the read head and is sensed, as evidenced by generation of Character Detect Clock signals, Cf, the W Buffer is clocked indicating the presence of characters.

$$Ecm = W11\ \overline{D1}\ \overline{D2}\ \overline{D3}\ \overline{Dt}\ \overline{W5}\ \overline{W6}\ Rcd\ \overline{W0\ Rbi}\ (Mf + Mr)$$

After the W Buffer receives two characters, W0 is set, thereby providing a control signal condition to commence the scan reverse process termination.

$$sW0 = \overline{W9}\ W6\ \overline{W8}\ Ecw + - - -$$

$$rW0 = Wc + - - -$$

The Gap signal is true upon commencing the scan reverse process and will be reset upon generation of a Character Detect Clock, Cf. Gap will not become true again until the absence of Cf has been detected for specified durations depending on the setting of the DENSITY SELECT switch for the tape unit addressed.

Gap = 150 microseconds with no Cf if Da (200 bpi)

+ 54 microseconds with no Cf if Db (556 bpi)

+ 37 microseconds with no Cf if Dc (800 bpi)

The Gap signal is present initially upon starting a reverse scan until the first character is read, and may reappear if that character represents the longitudinal check character for the record. These Gap signals do not initiate the reverse scan termination process because W0 is not set.

H-4. ERASE REVERSE, INITIAL START

Appropriate Erase Reverse EOM instructions initiate the Erase Reverse process (Figure 6). The EOM generates the generalized control command, M start. Reverse Control flip-flop Mr, and Tape Unit Select flip-flop Ma are set.

$$sMr = \underline{M\ start\ Q2}\ C12\ \overline{Mf}\ \overline{Mr}$$

$$sMa = \underline{M\ start\ Q2}\ Ready\ (Unit\ Select)\ \overline{Ma}$$

A Reverse Actuate signal is generated to engage the reverse direction pinch roller.

$$Reverse\ Actuate = Ma\ Mr\ \overline{Test} + - - -$$

A Write Activate signal is generated to enable the Write Drivers to permit the erase function.

$$Write\ Activate = Ma\ W9\ W11\ \overline{Test}$$

Control Timer D4 is triggered to delay the generation of a Halt signal, Whs, if the block to be erased is of so short a length that succeeding start/stop operations might exceed the maximum program limitations of the tape transport mechanisms.

$$sD4 = (M\ start\ Q2\ \overline{Mf}\ \overline{Mr})\,dc$$

$$rD4 = 14\ milliseconds\ after\ sD4$$

$$Whs = W11\ \overline{D1}\ \overline{D2}\ \overline{D3}\ \overline{D4}\ \overline{Dt}\ \overline{Mf}\ \overline{Mr}$$

Flip-flop Rpb from the Buffer Register is used to enable Clock Detect flip-flop Rcd. The W Buffer is normally programmed to erase in reverse as many words as contained in the record to be erased. Clocks to the W Buffer are provided by Ecm.

$$sRpb = \underline{Ri}\ (W9\ W11\ \overline{Rpb}\ \overline{D1}\ \overline{D2}\ \overline{D3}\ \overline{Dt}\ \overline{Ds}\ \overline{\overline{W0}\ W5\ \overline{W6}\ W9\ W11} + - - -)$$

$$rRpb = (M\ start)\,dc + - - -$$

$$sRcd = \underline{Mc}\ W9\ W11\ Rpb\ \overline{Rcd}$$

$$Ecm = W11\ \overline{D1}\ \overline{D2}\ \overline{D3}\ \overline{Dt}\ \overline{W5}\ \overline{W6}\ Rcd\ \overline{W0\ Rbi}\ (Mf + Mr)$$

The Write Toggle Erase signal, Mre, insures that the Write Toggle flip-flops are reset during the erase operation.

$$Mre = W9\ W10\ W11 + - - -$$

The effect of erasing a record of n words with an Erase Reverse instruction for n words is such that the effective length of the gap following the record preceding the one erased is elongated by approximately 0.2 inch. This is because the aggregate number of timing delays in the reverse erase direction is slightly less than in the forward direction. This phenomenon can be utilized to cause the tape to "creep" out of a defective tape area by successive write and erase reverse operations.

H-5. READ OR WRITE FORWARD, OPERATION TERMINATION

After the Write operation, if the W Buffer has been terminated by a terminate output, EOM 14000, the last word is recorded and a longitudinal check character is generated (Figure 7). In Write operations data recorded by the write head must proceed to the read head for read-after-write checking. The absence of characters passing the read head will initiate a write forward operation termination sequence. Similarly, if while reading a record, data ceases to pass the read head, the absence of data is detected and initiates a read forward operation termination sequence. In the forward direction (in either write or read modes), the initiation of the stopping sequence is keyed to the read head failing to detect the presence of characters.

The gap signal is true upon commencing the read or write operation, and is reset upon generation of a Character Detect Clock, Cf, derived from the first character sensed by the read head. Gap does not become true again until the absence of Cf signals has been detected for specified durations, depending on the setting of the DENSITY SELECT switch for the tape unit addressed.

Gap = 150 microseconds with no Cf if Da (200 bpi)

+ 54 microseconds with no Cf if Db (556 bpi)

+ 37 microseconds with no Cf if Dc (800 bpi)

Some time after the last character of a record has been read, Gap becomes true. If the record contains a longitudinal check character, Gap goes false and becomes true some time later.

In read and write operations, the Gap Detect flip-flop, Mtg, is set by the Gap signal when the Gap signal changes state, due to absence of data.

$$sMtg = \underline{\overline{Gap}}\ \overline{Ds}\ \overline{Dt}\ \overline{Mtg} + - - -$$

$$rMtg = (\overline{M\ start})\,dc + - - -$$

Mtg is reset also upon generation of a Character Detect Clock; for example, when the longitudinal check character is sensed. However, Mtg is set again when Gap becomes true again after the longitudinal check character is detected.

$$rMtg = \underline{Cf}\ (Mtg\ \overline{W9} + \overline{W10}) + - - -$$

The tape system is conditioned to commence a stopping sequence while reading if Mtg is set and if W0 is set, indicating that at least two characters have been read.

$$sW0 = \overline{W9}\ W6\ \overline{W8}\ Ecw + - - -$$

The system is conditioned to commence a stopping sequence while recording if Mtg is set and if the W Buffer Halt Interlock on output is true.

$$Halt\ Interlock = \overline{W0}\ W5\ \overline{W6}$$

$$rW0 = Ioc\ C12\ \overline{C17}\ \overline{C20}\ W9 + - - -$$

If the conditions for a stopping sequence are present (i.e., Mtg W0 for read and Mtg $\overline{W0}$ W5 $\overline{W6}$ for write) Control Timer D2 is triggered.

$$sD2 = W0\ \overline{W9}\ W11\ \overline{Dt}\ Mtg\ \underline{Q2}\ (Mf + Mr) + \overline{W0}\ W5\ \overline{W6}\ W9\ W11\ \overline{Dt}\ Gap\ Mtg\ \overline{M\ start}\ \underline{Q2}\ (Mf + Mr)$$

$$rD2 = 1.6\ milliseconds\ after\ sD2$$

While recording, triggering D2 generates a portion of the gap at the end of the record. When reading, triggering D2 delays stopping the tape until the desired position within the gap has been achieved.

D2 triggers Control Timer D5.

$$sD5 = \underline{\overline{D2}}$$

$$rD5 = 350\ microseconds\ after\ sD5$$

Control Timer D5 defines an interval during which the longitudinal check character of the block being read or recorded is to be checked.

D5 triggers Control Timer D6.

$$sD6 = \underline{D5}$$

$$rD6 = 10\ microseconds\ after\ sD6$$

Control Timer D6 is used to strobe the results of longitudinal parity in order to set Error Detector Wes.

Control flip-flop Dt is set, indicating that the stopping sequence has commenced.

$$sDt = \underline{Q2}\ D5\ \overline{Dt}$$

$$rDt = (\overline{W11}\ \overline{M\ start})\ dc + - - -$$

When Control Timer D2 has timed out, Forward Control flip-flop Mf and Gap Detect flip-flop Mtg are reset.

$$rMf = (Mcr)\ dc$$

$$rMtg = (Mcr)\ dc + - - -$$

$$Mcr = \overline{D1}\ \overline{D2}\ \overline{Ds}\ Dt\ (\overline{W9}\ W11\ W0 + W9\ W11) + - - -$$

The Forward Actuate signal is removed.

$$Forward\ Actuate = Ma\ Mf\ \overline{Test}$$

To provide delayed Halt signal, Whs, to the W Buffer while the tape decelerates, Control Timer D3 is triggered.

$$sD3 = \overline{D1}\ \overline{D2}\ \overline{Ds}\ Dt\ \overline{D4}\ \overline{Mf}\ \overline{Mr}\ \underline{Q2} + - - -$$

$$rD3 = 25\ milliseconds\ after\ sD3$$

$$rDt = \underline{Q2}\ D3\ \overline{Ds}\ Dt + - - -$$

$$Whs = W11\ \overline{D1}\ \overline{D2}\ \overline{D3}\ \overline{D4}\ \overline{Dt}\ \overline{Mf}\ \overline{Mr}$$

To guard against exceeding the program limitations of the tape mechanism, Halt signal, Whs, is delayed by Control Timer D4 if the operation commenced less than 14 milliseconds since the tape commenced deceleration.

$$sD4 = (M\ start\ \underline{Q2}\ \overline{Mf}\ \overline{Mr})\ dc$$

$$rD4 = 14\ milliseconds\ after\ sD4$$

Tape Unit Select flip-flop Ma is reset upon generation of Whs. If a record operation is in progress, the Write Activate signal is removed and the tape unit becomes ready.

$$rMa = (Whs)\ dc + - - -$$

$$Write\ Activate = Ma\ W9\ W11\ \overline{Test}$$

$$Ready = \overline{Ma}\ \overline{Mb}\ \overline{Dr}\ (Ready)$$

Upon the receipt of Whs, the W Buffer will cycle until Wf is reset, at which time the W Buffer is disconnected and is ready for a new input/output instruction.

H-6. SCAN REVERSE, OPERATION TERMINATION

In a Scan Reverse operation, after the last character has passed the read head the Gap detector commences its timing to detect Gap (Figure 8).

Gap = 150 microseconds with no Cf if Da (200 bpi)

+ 54 microseconds with no Cf if Db (556 bpi)

+ 37 microseconds with no Cf if Dc (800 bpi)

Upon detection of Gap, Gap Detect flip-flop Mtg is set.

$$sMtg = \underline{\overline{Gap}}\ \overline{Ds}\ \overline{Dt}\ \overline{Mg} + - - -$$

The tape unit is conditioned to commence a stopping sequence on Scan Reverse if Mtg is set, and if W0 is set indicating that at least two characters have entered the W Buffer.

$$sW0 = \overline{W9}\ W6\ \overline{W8}\ Ecw + - - -$$

If the conditions for a stopping sequence are present (i.e., Mtg W0) Control Timer D2 is triggered which in turn triggers Control Timers D1 and D5.

$$sD2 = W0\ \overline{W9}\ W11\ \overline{Dt}\ Mtg\ \underline{Q2}\ (Mf + Mr) + - - -$$

rD2 = 1.6 milliseconds after sD2

$$sD5 = \underline{\overline{D2}}$$

rD5 = 350 microseconds after sD5

$$sD1 = (Mr\ D2)\ dc + - - -$$

rD1 = 4.7 milliseconds after sD1

Setting D1 delays stopping of the tape until the desired position within the Gap has been achieved.

Control flip-flop Dt is set in order to remember that the stopping sequence has commenced.

$$sDt = \underline{Q2}\ D5\ \overline{Dt}$$

$$rDt = (\overline{W11}\ \overline{M\ start})\ dc + - - -$$

Control Timer D5 triggers Control Timer D6.

$$sD6 = \underline{D5}$$

rD6 = 10 microseconds after sD6

Control Timer D6 is used to strobe the results of the longitudinal parity in order to set Error Detector Wes.

When Control Timer D1 has timed out, Reverse Control flip-flop Mr and Gap Detect flip-flop Mtg are reset.

$$rMr = (Mcr)\ dc$$

$$rMtg = (Mcr)\ dc + - - -$$

$$Mcr = \overline{D1}\ \overline{D2}\ \overline{Ds}\ Dt\ (\overline{W9}\ W11\ W0 + - - -) + - - -$$

The Reverse Actuate signal is removed.

$$Reverse\ Actuate = Ma\ Mr\ \overline{Test} + - - -$$

Control Timer D3 is triggered to provide a delayed Halt signal, Whs, to the W Buffer while the tape decelerates.

$$sD3 = \overline{D1}\ \overline{D2}\ \overline{Ds}\ Dt\ \overline{D4}\ \overline{Mf}\ \overline{Mr}\ \underline{Q2} + - - -$$

rD3 = 25 milliseconds after sD3

$$rDt = \underline{Q2}\ D3\ \overline{Ds}\ Dt + - - -$$

$$Whs = W11\ \overline{D1}\ \overline{D2}\ \overline{D3}\ \overline{D4}\ \overline{Dt}\ \overline{Mf}\ \overline{Mr}$$

To guard against exceeding the program limitations of the tape mechanism, Halt signal, Whs, is delayed by Control Timer D4 if the operation started less than 14 milliseconds before the stopping sequence commenced.

$$sD4 = (M\ start\ Q2\ \overline{Mf}\ \overline{Mr})\ dc$$

rD4 = 14 milliseconds after sD4

Tape Unit Select flip-flop Ma is reset upon generation of Whs and the tape unit becomes ready.

$$rMa = (Whs)\ dc + - - -$$

$$Ready = \overline{Ma}\ \overline{Mb}\ \overline{Dr}\ (Ready)$$

Upon receipt of Whs, the W Buffer will cycle until Wf is reset, at which time the W Buffer is disconnected and is ready for a new input/output instruction.

H-7. WRITE, OPERATION CONTINUE

Provisions are made to continue a Write Operation without stopping the tape transport between records (Figure 9). The correct gap length is preserved in this mode. Utilization of this mode by-passes the delays otherwise induced by the Control Unit to prevent exceeding the program limitations of the tape mechanisms on successive short records and the delays inherent in start/stop operations.

After the information is recorded and the output process terminated, the data proceeds to the read head. The absence of data is sensed by the Gap Detector.

Gap = 150 microseconds with no Cf if Da (200 bpi)

+ 54 microseconds with no Cf if Db (556 bpi)

+ 37 microseconds with no Cf if Dc (800 bpi)

Absence of data at the read head causes the Gap signal to change state and set Gap Detect flip-flop Mtg.

$$sMtg = \underline{\overline{Gap}}\ \overline{Ds}\ \overline{Dt}\ \overline{Mtg} + - - -$$

The tape unit is conditioned to commence a stopping sequence while recording if Mtg is set and if the W Buffer Halt Interlock on output is true.

$$\text{Halt Interlock} = \overline{W0}\ W5\ \overline{W6}$$

$$rW0 = Ioc\ C12\ \overline{C17}\ \overline{C20}\ W9 + - - -$$

If the conditions for a stopping sequence are present (i.e., Mtg $\overline{W0}$ W5 $\overline{W6}$), Control Time D2 is triggered.

$$sD2 = \overline{W0}\ W5\ \overline{W6}\ W9\ W11\ \overline{Dt}\ Gap\ Mtg$$
$$\overline{M\ start}\ \underline{Q2}\ (Mf + Mr) + - - -$$

$$rD2 = 1.6\ \text{milliseconds after sD2}$$

When recording, triggering D2 generates a portion of the gap at the end of the record. D2 triggers Control Timer D5.

$$sD5 = \underline{\overline{D2}}$$

$$rD5 = 350\ \text{microseconds after sD5}$$

Control Timer D5 defines an interval during which the longitudinal check character of the record just recorded is to be checked.

Control flip-flop Dt is set to remember that the stopping sequence has commenced.

$$sDt = \underline{Q2}\ D5\ \overline{Dt}$$

$$rDt = (\overline{W11}\ \overline{M\ start})\ dc + - - -$$

The interval between the time D5 falls and D2 falls (approximately 1.2 milliseconds), defines the time during which the control unit may be given a command to continue the recording operation without stopping the tape. This time interval is tested by SKS 12610, skip if not gap. A skip does not occur if the test is performed during the interval D2 Dt $\overline{D5}$.

$$(\overline{Sio}) = \overline{C12}\ C13\ \overline{C14}\ C15\ C16\ (Mtg)\ \overline{Rtm}$$

If, during the interval Mtg, a command to continue occurs, Control flip-flop Ds is set, and Tape Mark Detect flip-flop Rtm is set. Setting Rtm inhibits (Sio) until the next gap is reached.

$$sRtm = (M\ start)\ dc$$

$$sDs = \underline{Q2}\ M\ start\ D2$$

Control flip-flop Ds remembers that the operation is to continue, and permits resetting Control flip-flop, Dt, which had been set to commence the stopping sequence.

$$rDt = \underline{Q2}\ Ds\ W9\ W11 + - - -$$

When Control Timer D2 times out, Control Timer D1 is set in order to continue generation of gap.

$$sD1 = Ds\ \underline{D2} + - - -$$

$$rD1 = 4.7\ \text{milliseconds after sD1}$$

Once D1 has been set, Ds is permitted to reset.

$$rDs = \underline{Q2}\ D1\ Ds + - - -$$

When D1 has timed out, Rpb is set which enables the clock detection process for writing.

$$sRpb = \underline{Ri}\ (W9\ W11\ \overline{Rpb}\ \overline{D1}\ \overline{D2}\ \overline{D3}\ \overline{Dt}\ \overline{Ds}$$
$$\overline{\overline{W0}\ W5\ \overline{W6}\ W9\ W11} + - - -)$$

$$rRpb = (M\ start)\ dc + - - -$$

where:

$$Ri = Mc\ W9\ W11 + - - -$$

The write continue operation may be repeated for as many records as required.

The tape unit remains continually addressed during the above sequences, therefore, the tape unit is never ready.

$$Ready = \overline{Ma}\ \overline{Mb}\ \overline{Dr}\ (Ready)$$

Similarily, the W Buffer does not test ready. Should it do so, it would indicate that the command to continue did not occur during the specified interval and that the tape operation stopped.

H-8. READ OR FORWARD SCAN, OPERATION CONTINUE

Provisions are made to continue Read or Scan Forward operations without stopping the tape transport between records (Figure 10). Utilization of this mode by-passes the delays induced by the control unit to prevent exceeding the program limitations of the tape mechanism on successive short records, and the delays inherent in start/stop operations.

The absence of data at the read head is sensed by the Gap Detector.

Gap = 150 microseconds with no Cf if Da (200 bpi)

+ 54 microseconds with no Cf if Db (556 bpi)

+ 37 microseconds with no Cf if Dc (800 bpi)

Gap Detect flip-flop Mtg is set by the Gap signal as the Gap signal changes state due to detection of the absence of data at the read head.

$$sMtg = \underline{\overline{Gap}}\ \overline{Ds}\ \overline{Dt}\ \overline{Mtg} + - - -$$

The tape unit is conditioned to commence a stopping sequence on reading or scanning forward if Mtg is set and if at least two characters have been read as evidenced by W0.

$$sW0 = \overline{W9}\ W6\ \overline{W8}\ Ecw + - - -$$

$$rW0 = Wc + - - -$$

If the conditions for a stopping sequence are present (i.e., Mtg W0), Control Timer D2 is triggered.

$$sD2 = W0\ \overline{W9}\ W11\ \overline{Dt}\ Mtg\ (Mf + Mr)\ \underline{Q2} + - - -$$

rD2 = 1.6 milliseconds after sD2

On reading or scanning forward, triggering D2 delays stopping the tape until the desired position within the gap is achieved. Control Timer D2 triggers Control Timer D5.

$$sD5 = \underline{\overline{D2}}$$

rD5 = 350 microseconds after sD5

Control Timer D5 defines an interval during which the longitudinal check character of the record just read is to be checked.

Control flip-flop Dt is set to remember that the stopping sequence has commenced.

$$sDt = \underline{Q2}\ D5\ \overline{Dt}$$

$$rDt = (\overline{W11}\ \overline{M\ start})\ dc + - - -$$

The interval between the time D5 falls and D2 falls (approximately 1.2 milliseconds) defines the time during which the control unit may be given a command to continue the reading or scan forward operation without stopping the tape. This time interval is tested by SKS 12610, skip if not gap. A skip does not occur if the test is performed during the interval Mtg.

$$\overline{(Sio)} = \overline{C12}\ C13\ \overline{C14}\ C15\ C16\ (Mtg)\ \overline{Rtm} + - - -$$

If during the interval (Mtg) a command to continue occurs, Control flip-flop Ds is set, and Tape Mark Detect flip-flop Rtm is set. Setting Rtm inhibits $\overline{(Sio)}$ until the next gap is reached.

$$sRtm = (M\ start)\ dc$$

$$sDs = \underline{Q2}\ M\ start\ D2$$

Control flip-flop Ds remembers that the operation is to continue.

To ride over extraneous signals within the gap, Control Timer D1 is triggered and Ds is reset.

$$sD1 = Ds\ \underline{D2} + - - -$$

rD1 = 4.7 milliseconds after sD1

$$rDs = \underline{Q2}\ D1\ Ds + - - -$$

Forward Control flip-flop Mf is not reset because of the command to the W Buffer to reset W0.

$$rW0 = Wc + - - -$$

$$rMf = (Mcr)\ dc$$

$$Mcr = \overline{D1}\ \overline{D2}\ \overline{Ds}\ Dt\ (\overline{W9}\ W11\ W0 + ---) + - - -$$

The read or scan forward operation may be repeated for as many records as required. Since the tape unit is continually addressed during the above sequences, the tape unit is never ready.

$$Ready = \overline{Ma}\ \overline{Mb}\ \overline{Dr}\ \overline{(Ready)}$$

Similarly, the W Buffer does not test ready. Should it do so, it would indicate that the command to continue did not occur during the specified interval and that the tape operation is stopped.

H-9. REVERSE SCAN, OPERATION CONTINUE

Provisions are made to continue Reverse Scan operations without stopping the tape transport between records (Figure 11). Utilization of this mode by-passes the delays inserted by the control unit to prevent exceeding the program limitations of the tape mechanism on successive short records and the delays inherent in start/stop operations.

The absence of data at the read head is sensed by the Gap Detector.

Gap = 150 microseconds with no Cf if Da (200 bpi)

+ 54 microseconds with no Cf if Db (556 bpi)

+ 37 microseconds with no Cf if Dc (800 bpi)

Gap Detect flip-flop Mtg is set by the Gap signal as the Gap signal changes state, due to the detection of the absence of data at the read head.

$$sMtg = \underline{\overline{Gap}}\ \overline{Ds}\ \overline{Dt}\ \overline{Mtg} + - - -$$

The tape is conditioned to commence a stopping sequence on scanning reverse if Mtg is set and if at least two characters have been read as evidenced by W0.

$$sW0 = \overline{W9}\ W6\ \overline{W8}\ Ecw + - - -$$

$$rW0 = Wc + - - -$$

If the conditions for a stopping sequence are present (i.e., Mtg W0), Control Timer D2 is triggered.

$$sD2 = W0\ \overline{W9}\ W11\ \overline{Dt}\ Mtg\ (Mf + Mr)\ \underline{Q2} + - - -$$

rD2 = 1.6 milliseconds after sD2

Triggering of Control Timer D2 triggers Control Timers D5 and D1.

$$sD5 = \underline{\overline{D2}}$$

rD5 = 350 microseconds after sD5

sD1 = (Mr D2) dc + - - -

rD1 = 4.7 milliseconds after sD1

On scanning reverse, triggering D1 delays stopping the tape until the desired position within the gap is achieved. Control Timer D5 defines an interval during which the longitudinal parity of the record just read is to be checked.

Control flip-flop is set to remember that a stopping sequence has commenced.

$$sDt = \underline{Q2}\ D5\ \overline{Dt}$$

$$rDt = (\overline{W11}\ \overline{M\ start})\ dc + - - -$$

The interval between the time D5 falls and D2 falls (approximately 1.2 milliseconds), defines the time during which the control unit may be given a command to continue the reverse scan without stopping the tape. This time interval is tested by SKS12610, skip if not gap. A skip does not occur if the test is performed during the interval Mtg.

$$\overline{Sio} = \overline{C12}\ C13\ \overline{C14}\ C15\ C16\ (Mtg)\ \overline{Rtm} + - - -$$

If a command to continue occurs during the interval Mtg, Control flip-flop Ds is set and Tape Mark Detect flip-flop Rtm is set. Setting Rtm inhibits $\overline{Sio}$ until the next gap is reached.

sRtm = (M start) dc

$$sDs = \underline{Q2}\ M\ start\ D2$$

Control flip-flop Ds remembers that the operation is to continue. Extraneous signals within the gap are overridden, because D1 was triggered at the time D2 was triggered.

Reverse Control flip-flop Mr is not reset because the command to the W Buffer resets W0.

$$rW0 = Wc + - - -$$

rMr = (Mcr) dc

$$Mcr = \overline{D1}\ \overline{D2}\ \overline{Ds}\ Dt\ (\overline{W9}\ W11\ W0 + - - -) + ---$$

The reverse scan operation is repeated for as many records as required. The tape unit is continually addressed during the above sequences, therefore, the tape unit is never ready.

$$Ready = \overline{Ma}\ \overline{Mb}\ \overline{Dr}\ \overline{Ready}$$

Similarly, the W Buffer does not test ready. Should it test ready, it would indicate that the command to continue did not occur during the specified interval and that the tape operation has stopped.

J. CHARACTER RECORDING

J-1. DATA FLOW

Information to be recorded is supplied by the W Buffer Character Register, R6 through Rp (refer to Figure 2). The information contains odd parity whether the recording mode is binary or BCD. The W Buffer Character Register outputs are routed to the Data Translation circuits, R6w through Rpw. If the information is in binary, no change occurs. If the information is in SDS BCD internal code, then it is converted to IBM BCD interchange code. Information from the Data Translation circuits is put into the Write Data Register, M6 through Mp. The Write Data Register provides for one character of storage during the write operation. Information in the Write Data Register is sent to the Write Deskew Timers, M6s through Mps. The Write Deskew Timers are triggered by the recording clock, Mc, and provide delayed outputs. Delays are adjustable to achieve deskewing of the static skew of the write head with respect to a deskewed read head.

Non-return to zero (NRZ1) recording is accomplished by toggling each Write Toggle flip-flop, M6t through Mpt,with its associated Write Deskew Timer, each time a "one" is to be recorded. Outputs of the Write Toggle flip-flops are routed to the Write Drivers M6w through Mpw. The Write Drivers signal condition the Write Toggle flip-flop outputs.

J-2. RECORDING CLOCK SIGNAL

Provisions are made for three recording frequencies. The three recording frequencies are derived from three clock generators.

$$Mca = 15\,Kc$$

$$Mcb = 41.7\,Kc$$

$$Mcc = 60\,Kc$$

The recording frequency selected at any time is dependent on the position of the DENSITY SELECT switch on the Auxiliary Control Panel of the unit which is addressed by the write operation.

$$Mcd = Mca \text{ if } Da \text{ (200 bpi)} + Mcb \text{ if } Db \text{ (556 bpi)} + Mcc \text{ if } Dc \text{ (800 bpi)}$$

Clock signal one shot, Mc, is triggered by Mcd.

$$sMc = \underline{Mcd}$$

$$rMc = 2 \text{ microseconds after } sMc$$

Thus, Mc is a 2-microsecond pulse; its frequency depends on the density setting of the selected tape unit.

J-3. CLOCK DETECTION

The clock detection process is not enabled until Buffer Register flip-flop, Rpb, is set (Figure 13). Rpb is set after the tape has accelerated, and the "half" gap is recorded if the write operation is just beginning, or after the gap is recorded on a write continue operation.

$$sRpb = \underline{Ri}\ (W9\ W11\ \overline{Rpb}\ \overline{D1}\ \overline{D2}\ \overline{D3}\ \overline{Dt}\ \overline{Ds}\ \overline{\overline{W0}\ W5\ \overline{W6}\ W9\ W11} + - - -$$

$$rRpb = (M \text{ start})\ dc + - - -$$

where:

$$Ri = W9\ W11\ Mc + - - -$$

After Rpb is set, each clock signal occuring is detected by the Clock Detect flip-flop, Rcd.

$$sRcd = W9\ W11\ \underline{Mc}\ Rpb\ \overline{Rcd} + - - -$$

The W Buffer is clocked by Ecw.

$$Ecw = Ecm + - - -$$

$$Ecm = W11\ \overline{D1}\ \overline{D2}\ \overline{D3}\ \overline{Dt}\ \overline{W5}\ \overline{W6}\ Rcd\ \overline{W0\ Rbi}\ (Mf + Mr)$$

Ecm remains true only until the W Buffer detects that it has received a clock. The W Buffer clocking cycle occurs:

$$sW6 = \overline{W5}\ Ecw\ (T22\text{-}T17)$$

$$rW6 = W5\ T0 + Wc$$

$$sW5 = \overline{W5}\ W6\ \overline{Ecw}\ T0 + - - -$$

$$rW5 = W4\ T0 + Wc$$

$$sW4 = W5\ Wf\ T24 + - - -$$

$$rW4 = W4\ T0 + - - -$$

The Clock Detect flip-flop Rcd is reset:

$$rRcd = \underline{\overline{W5}\ W6\ Q2}\ \overline{Rfd}\ Rcd + - - -$$

and the cycle is complete.

Registers Full Detect flip-flop Rfd monitors the clock timing cycle. Should a combination of adverse timing circumstances occur (e.g., if the tape process was programmed using the interrupt system) Rfd may set, and an error would be indicated.

$$sRfd = W9\ W11\ \underline{Mc}\ \overline{Rfd}\ Rcd + - - -$$

$$rRfd = W9\ W11\ \underline{Mc}\ Rfd + - - -$$

$$sWes = \underline{(Rfd\ Rpb\ W9\ W11)} + - - -$$

$$rWes = 10 \text{ microseconds after } sWes$$

J-4. W BUFFER CHARACTER REGISTER, R6 through Rp

The W Buffer Character Register provides the tape system with the characters which are to be recorded. All magnetic tape write instructions are Begin-Output-Without-Leader (i.e., C13) type. Tape leader or gap is automatically generated by the tape system. When clocking of the W Buffer commences, the W Buffer Character Register already contains the first character to be recorded. Therefore, each time a clocking cycle occurs, the character presently in the W Buffer Character Register is transferred to the Write Data Register. The clock then initiates the cycle to procure a new character for the W Buffer Character Register.

J-5. WRITE DATA REGISTER, M6 through Mp

The Write Data Register receives the character to be recorded from the W Buffer Character Register suitably modified by the Data Translation circuits depending on the Data Mode, binary or BCD (Figure 13). The Write Data Register is initially reset. Thereafter, each time the W Buffer is clocked (i.e., Rcd), in order to procure a new character, the character presently in the W Buffer Character Register is transferred to the Write Data Register.

$$sM6 = \underline{Mi}(W9\ W11\ R6 + - - -)$$

$$rM6 = \underline{Mi}(W9\ W11\ \overline{R6} + (M\ start)\ dc + - - -)$$

$$sM5 = \underline{Mi}(W9\ W11\ R5w + - - -)$$

$$rM5 = \underline{Mi}(W9\ W11\ \overline{R5w} + (M\ start)\ dc + - - -)$$

$$sM4 = \underline{Mi}(W9\ W11\ R4 + - - -)$$

$$rM4 = \underline{Mi}(W9\ W11\ \overline{R4} + \ (M\ start)\ dc + - - -)$$

$$sM3 = \underline{Mi}(W9\ W11\ R3w + - - -)$$

$$rM3 = \underline{Mi}(W9\ W11\ \overline{R3w} + (M\ start)\ dc + - - -)$$

$$sM2 = \underline{Mi}(W9\ W11\ R2 + - - -)$$

$$rM2 = \underline{Mi}(W9\ W11\ \overline{R2} + (M\ start)\ dc + - - -)$$

$$sM1 = \underline{Mi}(W9\ W11\ R1w + - - -$$

$$rM1 = \underline{Mi}(W9\ W11\ \overline{R1w} + (M\ start)\ dc + - - -)$$

$$sMp = \underline{Mi}(W9\ W11\ Rpw + - - -)$$

$$rMp = \underline{Mi}(W9\ W11\ \overline{Rpw} + (M\ start)\ dc + - - -)$$

where Mi is the Write Data Clock:

$$Mi = \overline{W5}\ W6\ W9\ \overline{W10}\ W11\ Rcd\ Q2 + - - -$$

J-6. WRITE DESKEW TIMERS, M6s through Mps

Information in the Write Data Register is sent to the Write Deskew Timers which provide delayed outputs. The delays are adjustable to achieve deskewing of the static skew of the write head with respect to the deskewed read head. Write Deskew Timers are enabled by the Write Deskew Clock Enable, Mw. Triggering of the Write Deskew Timers is controlled by clock signal, Mc. Calibration procedures referred to are in Section VI.

$$sM6s = \underline{Mc}\ Mw\ M6 + - - -$$

rM6s = 2 to 8 microseconds after sM6s (see calibration procedure)

$$sM5s = \underline{Mc}\ Mw\ M5 + - - -$$

rM5s = 2 to 8 microseconds after sM5s (see calibration procedure)

$$sM4s = \underline{Mc}\ Mw\ M4 + - - -$$

rM4s = 2 to 8 microseconds after sM4s (see calibration procedure)

$$sM3s = \underline{Mc}\ Mw\ M3 + - - -$$

rM3s = 2 to 8 microseconds after sM3s (see calibration procedure)

$$sM2s = \underline{Mc}\ Mw\ M2 + - - -$$

rM2s = 2 to 8 microseconds after sM2s (see calibration procedure)

$$sM1s = \underline{Mc}\ Mw\ M1 + - - -$$

rM1s = 2 to 8 microseconds after sM1s (see calibration procedure)

$$sMps = \underline{Mc}\ Mw\ Mp + - - -$$

rMps = 2 to 8 microseconds after sMps (see calibration procedure)

where:

$$Mw = Rpb\ W9\ W11$$

Note that the first time Mw Mc occurs, the Write Data Register is reset and has not received the first character from the W Buffer Character Register. The effect is to elongate the gap by one character as none of the Write Deskew Timers are triggered.

J-7. WRITE TOGGLE Flip-Flops, M6t through Mpt

Each time a Write Deskew Timer is triggered, its associated Write Toggle flip-flop toggles. Each time a Write Toggle flip-flop toggles a "one" is recorded in its associated channel. The Write Toggle Erase signal, Mre, ensures that the Write Toggle flip-flops are reset initially as the tape is generating gap.

$$sM6t = \underline{M6s}\ \overline{M6t}$$

$$rM6t = \underline{M6s}\ M6t + (Mre)\ dc$$

$$sM5t = \underline{M5s}\ \overline{M5t}$$

$$rM5t = \underline{M5s}\ M5t + (Mre)\ dc$$

$$sM4t = \underline{M4s}\ \overline{M4t}$$

$$rM4t = \underline{M4s}\ M4t + (Mre)\ dc$$

$$sM3t = \underline{M3s}\ \overline{M3t}$$

$$rM3t = \underline{M3s}\ M3t + (Mre)\ dc$$

$$sM2t = \underline{M2s}\ \overline{M2t}$$

$$rM2t = \underline{M2s}\ M2t + (Mre)\ dc$$

$$sM1t = \underline{M1s}\ \overline{M1t}$$

$$rM1t = \underline{M1s}\ M1t + (Mre)\ dc$$

$$sMpt = \underline{Mps}\ \overline{Mpt}$$

$$rMpt = \underline{Mps}\ Mpt + (Mre)\ dc$$

where:

$$Mre = W11\ M\ start + W9\ W11\ D1 + - - -$$

J-8. WRITE DRIVERS, M6w through Mpw

The Write Drivers signal condition the Write Toggle flip-flop outputs to provide drive currents to the write head. Writing on tape occurs if the file is not protected and the Write Activate signal is present.

$$\overline{\text{File Protect}} = \underline{K3\ \text{set}} \longrightarrow + 25\ \text{volts Write}$$

$$\text{Write Activate} = Ma\ W9\ W11\ \overline{Test}$$

J-9. WRITE, TERMINATE OUTPUT

The write operation is terminated by the computer program executing a terminate output, EOM14000, or by the interlace (Figure 14).

$$rW0 = Ioc\ C12\ \overline{C17}\ \overline{C19}\ \overline{C20}\ \overline{C21}\ \overline{C22}\ \overline{C23}\ W9\ T0$$
$$+ W9\ Iw\ Iwf\ (\overline{Iwg} + \overline{Iwh} + \overline{Iwi})\ \overline{T7\text{-}T0}$$
$$+ Wc$$

The W Buffer Halt Interlock is set after the last character of the last word has been transferred from the W Buffer Character Register to the Write Data Register.

$$\text{Halt Interlock} = \overline{W0}\ W5\ \overline{W6}$$

The clocking continues for one more cycle because the last character has not yet been recorded.

$$sRcd = W9\ W11\ Mc\ Rpb\ \overline{Rcd} + - - -$$

$$rRpb = (Rcd\ \overline{W0}\ W5\ \overline{W6}\ W9\ W11)\ dc + - - -$$

Registers Full Detect, Rfd, is set indicating a timing error but the Error Detector, Wes, is inhibited, because Rpb was reset.

J-10. LONGITUDINAL CHECK CHARACTER GENERATION

Four character spaces after the last recorded character a longitudinal check character is generated and recorded (Figure 14). The longitudinal check character provides even parity for the record in the longitudinal direction. Buffer Register flip-flops R1b and R2b count the four character spaces.

$$sR2B = \underline{Ri}\ (W9\ W11\ \overline{W0}\ W5\ \overline{W6}\ \overline{R2b}\ \overline{Rpb} + - - -)$$

$$rR2b = \underline{Ri}\ (W9\ W11\ R2b + (M\ start)\ dc + - - -)$$

$$sR1b = \underline{Ri}\ (W9\ W11\ R2b\ \overline{R1b} + - - -)$$

$$rR1b = (M\ start)\ dc + - - -$$

where:

$$Ri = W9\ W11\ Mc + - - -$$

After four counts, a Write Deskew Enable, Mrs, is generated.

$$Mrs = R1b\ R2b$$

Any Write Toggle flip-flop which is in a set condition after the data recording is completed, is toggled one more time in order to generate even longitudinal parity. The Write Deskew Timers (enabled by Mrs) are triggered if their associated Write Toggle flip-flops are set.

$$sM6s = \underline{Mc}\ Mrs\ M6t + - - -$$

rM6s = 2 to 8 microseconds after sM6s (see calibration procedure)

$$sM5s = \underline{Mc}\ Mrs\ M5t + - - -$$

rM5 = 2 to 8 microseconds after sM5s = (see calibration procedure)

sM4s = Mc Mrs M4t + - - -

rM4s = 2 to 8 microseconds after sM4s (see calibration procedure)

sM3s = Mc Mrs M3t + - - -

rM3s = 2 to 8 microseconds after sM3s (see calibration procedure)

sM2s = Mc Mrs M2t + - - -

rM2s = 2 to 8 microseconds after sM2s (see calibration procedure)

sM1s = Mc Mrs M1t + - - -

rM1s = 2 to 8 microseconds after sM1s (see calibration procedure)

sMps = Mc Mrs Mpt + - - -

rMps = 2 to 8 microseconds after sMps (see calibration procedure)

J-11. ERASE

For erase operations, clocking of the W Buffer proceeds the same as for write operations. However, clocking the Write Data Register is inhibited.

$$Mi = \overline{W5}\ W6\ W9\ \overline{W10}\ W11\ Rcd\ Q2 + - - -$$

The Write Toggle flip-flops are held in a dc reset condition.

$$Mre = W9\ W10\ W11 + - - -$$

Because no data are recorded on the tape, the read head does not sense data and no clocks are generated. The erase operation termination therefore requires that Mtg be set by a means other than the normal detection of the absence of characters (i.e., $\overline{Gap}$). When, during the erase operation, the terminate output signal is given to the W Buffer, the process of generating the longitudinal check character commences, R1b and R2b count, Mtg is permitted to set,

$$sMtg = \underline{W9\ W10\ W11\ R2b}\ \overline{Ds}\ \overline{Dt}\ \overline{Mtg} + - - -$$

and the termination process for the erase operation is initiated. Erasing a record completely, in the forward direction, requires the programming of enough additional characters to compensate for the distance (0.3 inch) that characters (during writing) would normally travel from the write head to the read head before commencing the termination process. To erase a record in the reverse direction completely, requires programming the erase to equal the block length previously written.

K. CHARACTER READING

Character reading occurs when data are sensed by the read head. This occurs during reading processes or during recording when read-after-write error detection circuitry is active.

K-1. DATA FLOW

As the magnetic tape passes over the read head, signals sensed by the read head are amplified and peak detected by the Read Amplifiers, (R6a) through (Rpa) (Figure 1). Depending on the direction of the tape operation, forward or reverse, the outputs from the Read Amplifiers trigger Read Deskew Timers Forward R6af through Rpaf, or Read Deskew Timers Reverse, R6ar through Rpar. The Read Deskew Timers are used to compensate for the static skew of the read head. Outputs from the Read Deskew Timers, R6a through Rpa are used to set the Read flip-flops, R6m through Rpm, during read operations, and are also used to toggle the Read flip-flops during write operations. During writing, the Read flip-flops are used to check lateral and longitudinal parity. During read operations the Read flip-flops provide storage for the character being read. In read operations the outputs from the Read flip-flops toggle the Write Data Register flip-flops, M6 through Mp, to check the longitudinal parity of the block being read, and are used to set the Buffer Register flip-flops, R6b through Rpb to provide an additional character of storage. The outputs from the Buffer Register are sent to the computer through the Data Translation circuits, R6w through Rpw. In the BCD read mode, data are translated from IBM-BCD interchange code to SDS-BCD internal code. No data translation takes place in the binary read mode. The W Buffer Character Register, R6 through Rp, accepts the characters from the Data Translation circuits for W Buffer processing.

K-2. READ AMPLIFIER

Circuits on the Read Amplifier are used to amplify and process information stored on magnetic tape. Fundamentally, there are six sections making up the module. These are shown in the functional block diagram.

The Differential Amplifier accepts a nominal 30-millivolt peak-to-peak signal directly from the tape transport read head, and amplifies it to a nominal 18-volt peak-to-peak level. After amplification, the signal is transformer coupled to a 3-way Rectifier section and converted to a 9-volt unidirectional signal. This is then fed, in parallel, to the Integrator, Differentiator, and Amplitude Sense channels. The Integrator measures the base width of the input signal to determine if it is of sufficient duration to constitute a legitimate signal. The Differentiator accepts the input signal if it is large enough in amplitude to cross a preset threshold level, Thd, and searches for a peak in the input signal waveform.

Read Amplifier Functional Block Diagram

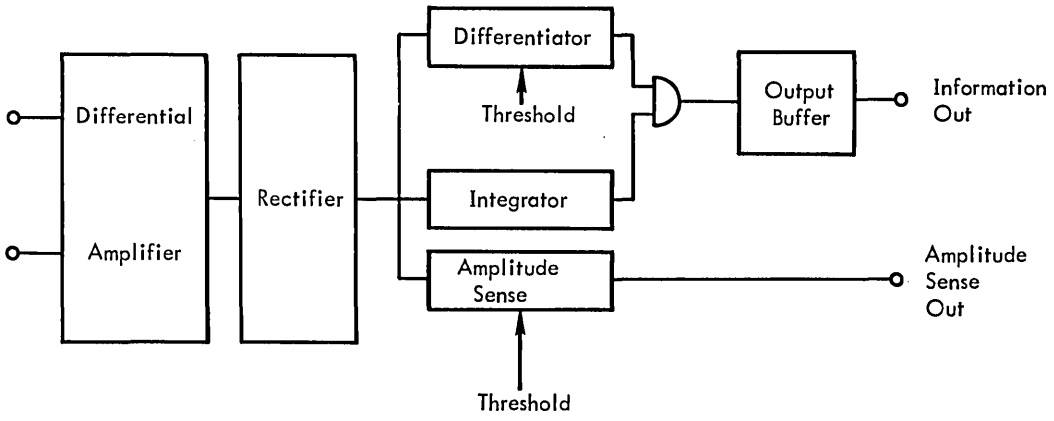

The Amplitude Sense channel is used to sample the amplitude of the input signal at peak time. It will produce a false signal (0-volt), $\overline{Aes}$, of 1-microsecond duration if the input signal fails to reach a predetermined threshold voltage, Tha. The Integrator and Differentiator channels are AND'ed together into the Output Buffer. If the signal from the Differential Amplifier has achieved a certain minimum amplitude and has persisted for a certain minimum time, the output from the Output Buffer will rise to the true (+8-volt) level. As the input signal passes through its peak, the Output Buffer will (at peak time plus 0.5-microsecond) fall rapidly to the false (0-volt) level producing a trigger signal, (R6a) through (Rpa) .

K-3. READ DESKEW TIMERS

The peak-detected Read Amplifier signals, (R6a) through (Rpa) , trigger the Read Deskew Timers Forward, R6af through Rpaf, or the Read Deskew Timers Reverse, R6ar through Rpar, depending on the direction of the tape operation in progress. The Read Deskew Timers provide a means to remove the static skew of the read head. The Read Deskew Timer Forward and Reverse outputs and Test Signals are OR'ed together by connecting the collector stages of corresponding channels together. For the forward direction:

sR6af = (R6a) + (Ma Mr + Ma Test) dc

rR6af = 2 to 8 microseconds after sR6af (see calibration procedure)

sR5af = (R5a) + (Ma Mr + Ma Test) dc

rR5af = 2 to 8 microseconds after sR5af (see calibration procedure)

sR4af = (R4a) + (Ma Mr + Ma Test) dc

rR4af = 2 to 8 microseconds after sR4af (see calibration procedure)

sR3af = (R3a) + (Ma Mr + Ma Test) dc

rR3af = 2 to 8 microseconds after sR3af (see calibration procedure)

sR2af = (R2a) + (Ma Mr + Ma Test) dc

rR2af = 2 to 8 microseconds after sR2af (see calibration procedure)

sR1af = (R1a) + (Ma Mr + Ma Test) dc

rR1af = 2 to 8 microseconds after sR1af (see calibration procedure)

sRpaf = (Rpa) + (Ma Mr + Ma Test) dc

rRpaf = 2 to 8 microseconds after sRpaf (see calibration procedure)

The term (Ma Mr + Ma Test) permits the Read Deskew Timers Reverse or Test Signals to control the outputs when the tape is not going in the forward direction.

For the reverse direction:

sR6ar = (R6a) + (Ma Mf + Ma Test) dc

rR6ar = 2 to 8 microseconds after sR6ar (see calibration procedure)

sR5ar = (R5a) + (Ma Mf + Ma Test) dc

rR5ar = 2 to 8 microseconds after sR5ar (see calibration procedure)

sR4ar = (R4a) + (Ma Mf + Ma Test) dc

rR4ar = 2 to 8 microseconds after sR4ar (see calibration procedure)

$$sR3ar = (\underline{R3a}) + (Ma\ Mf + Ma\ Test)\ dc$$

rR3ar = 2 to 8 microseconds after sR3ar (see calibration procedure)

$$sR2ar = (\underline{R2a}) + (Ma\ Mf + Ma\ Test)\ dc$$

rR2ar = 2 to 8 microseconds after sR2ar (see calibration procedure)

$$sR1ar = (\underline{R1a}) + (Ma\ Mf + Ma\ Test)\ dc$$

rR1ar = 2 to 8 microseconds after sR1ar (see calibration procedure)

$$sRpar = (\underline{Rpa}) + (Ma\ Mf + Ma\ Test)\ dc$$

rRpar = 2 to 8 microseconds after sRpar (see calibration procedure)

The term (Ma Mf + Ma Test) permits the Read Deskew Timers Forward or Test Signals to control the outputs when the tape is not going in the reverse direction. The effective signals sent to the Read flip-flops are:

$$R6a = R6af + R6ar + - - -$$

$$R5a = R5af + R5ar + - - -$$

$$R4a = R4af + R4ar + - - -$$

$$R3a = R3af + R3ar + - - -$$

$$R2a = R2af + R2ar + - - -$$

$$R1a = R1af + R1ar + - - -$$

$$Rpa = Rpaf + Rpar + - - -$$

Although provisions are made to remove the static skew of R6a through Rpa, an element of dynamic skew will be evident on these signals. This is caused by instantaneous tracking irregularities during recording and reading.

K-4. FIRST CHARACTER BIT SENSE, Fb

A read clocking cycle commences upon the fall of the first bit detected from the character being read from tape. The First Character Bit Sense, Fb, circuit is essentially an ac OR gate which senses the first bit from a character.

$$Fb = (\underline{R6a} + \underline{R5a} + \underline{R4a} + \underline{R3a} + \underline{R2a} + \underline{R1a} + \underline{Rpa})\ \overline{Rfb}$$

Term $\overline{Rfb}$ locks out further sensing of other bits which may fall for the character being read, thereby protecting against a false read clock cycle.

K-5. FIRST CHARACTER BIT SENSE LOCKOUT, Rfb

Upon detection of the fall of the first bit, Fb, of a character, flip-flop Rfb is triggered (Figure 12). Rfb locks out Fb from falsely triggering the read cycle due to bits of the same character which succeed the first one.

$$sRfb = \underline{Fb}\ (W11\ \overline{D1}\ \overline{D2}\ \overline{D3}\ \overline{Dt}\ \overline{Rbt} + D5)\ \overline{Rfb}$$

Term W11 $\overline{D1}$ $\overline{D2}$ $\overline{D3}$ $\overline{Dt}$ $\overline{Rbt}$ inhibits triggering Rfb while traversing gap, or when the operation commenced from the Load-Point. Control Timer, D5, permits setting Rfb when the longitudinal check character is expected.

Setting Rfb initiates a sequence of triggering several clock timers. Rfb is reset after the Character detect period and the First Character Bit Sense, Fb, is enabled again so as to check for out-of-skew tolerance characters.

$$rRfb = (\underline{Cr + Cf\ W9\ W11})\ Rfb + (\overline{W11}\ \overline{M\ start})\ dc$$

K-6. CHARACTER DETECT CLOCK, Cf

Timing requirements of a character period vary with the data transfer rate which is a function of the recorded density (Figure 12). The DENSITY SELECT switch controls the selection of the several one-shots used to define the character period.

The character period commences upon detection of the first bit, Fb, of the character which, in turn, sets Rfb. Setting Rfb triggers the Character Detect Clock, Cfb. In effect, Cfb is the OR-ing of three one-shots, Cfba, Cfbb, and Cfbc. The timer selected is dependent on the operating density.

$$sCfba = \underline{\overline{Rfb}}\ Da + (\overline{Da})\ dc$$

rCfba = 17 microseconds after sCfba

$$sCfbb = \underline{\overline{Rfb}}\ Db + (\overline{Db})\ dc$$

rCfbb = 6 microseconds after sCfbb

$$sCfbc = \underline{\overline{Rfb}}\ Dc + (\overline{Dc})\ dc$$

rCfbc = 4 microseconds after sCfbc

The Character Detect Clock, Cfb, is formed by OR-ing together the above timers in a common-collector circuit.

$$Cfb = Cfba + Cfbb + Cfbc$$

To eliminate false clocks during the selection of the appropriate timer, Cfb is qualified to form Cf.

$$Cf = Cfb\ \overline{M\ start}\ \overline{D1}\ \overline{Whs}$$

K-7. CHARACTER GATE WRITE SKEW, Cs

While writing, after Cf has timed out, Character Gate Write Skew, Cs, is generated. Cs is used to detect the presence of any bits which do not meet minimum skew requirements for the character being processed. Because the skew requirements vary with the operation density, three character Gate Write Skew Timers, Cgsa, Cgsb, and Cgsc, are included. The timer selected is dependent on the density selected.

$$sCgsa = \underline{Cf}\ W9\ W11\ Da + (\overline{Da})\ dc$$

rCgsa = 34 microseconds after sCgsa

$$sCgsb = \underline{Cf}\ W9\ W11\ Db + (\overline{Db})\ dc$$

rCgsb = 12 microseconds after sCgsb

$$sCgsc = \underline{Cf}\ W9\ W11\ Dc + (\overline{Dc})\ dc$$

rCgsc = 8 microseconds after sCgsc

The Character Gate Write Skew signal, Cgs is formed by OR-ing together the above timers in a common-collector circuit.

$$Cgs = Cgsa + Cgsb + Cgsc$$

To eliminate false clocks during the selection of the appropriate timer, Cgs is qualified to form Cs.

$$Cs = Cgs\ \overline{M\ start}\ \overline{D1}\ \overline{Whs}$$

K-8. CHARACTER GATE READ, Cr

On read operations, after Cf has timed out, Character Gate Read, Cr, is generated. Cr is used to extend the period during which bits from a character are accepted. The total time during which bits are accepted for a particular character equals the time defined by Cf plus Cr. Because this period varies with the operating density, three Character Gate Read timers, Cgra, Cgrb, and Cgrc, are included. The timer selected is dependent on the density selected.

$$sCgra = \underline{Cf}\ \overline{W9}\ W11\ Da + (\overline{W5}\ W6\ Cr)\ dc + (\overline{Da})\ dc$$

rCgra = 17 microseconds after sCgra

$$sCgrb = \underline{Cf}\ \overline{W9}\ W11\ Db + (\overline{W5}\ W6\ Cr)\ dc + (\overline{Db})\ dc$$

rCgrb = 6 microseconds after sCgrb

$$sCgrc = \underline{Cf}\ \overline{W9}\ W11\ Dc + (\overline{W5}\ W6\ Cr)\ dc + (\overline{Dc})\ dc$$

rCgrc = 4 microseconds after sCgrc

The term $(\overline{W5}\ W6\ Cr)\ dc$ is used to prolong Cr, to prevent the setting of Rcd while $\overline{W5}$ W6 Q2 is trying to reset Rcd. See Section K-14.

The Character Gate Read Signal Cgr, is formed by OR-ing together the above timers in a common-collector circuit.

$$Cgr = Cgra + Cgrb + Cgrc$$

To eliminate false clocks during the selection of the appropriate timer, Cgr is qualified to form Cr.

$$Cr = Cgr\ \overline{M\ start}\ \overline{D1}\ \overline{Whs}$$

K-9. READ FLIP-FLOPS, R6m through Rpm

During a write process, the Read flip-flops toggle, and are used to check lateral and longitudinal parities. During a read process, the Read flip-flops are the outputs from the Read Deskew Timers, R6a through Rpa. The setting time in read, or the toggling in write, of the Read flip-flops will exhibit a degree of ambiguity due to the dynamic skew of the information.

$$sR6m = \underline{R6a}\ \overline{R6m}\ (W11\ \overline{D1}\ \overline{D2}\ \overline{D3}\ \overline{Dt}\ \overline{Rbt} + D5)$$

$$rR6m = \underline{R6a}\ R6m\ (W11\ \overline{D1}\ \overline{D2}\ \overline{D3}\ \overline{Dt}\ \overline{Rbt} + D5) + (Cri + M\ start)\ dc$$

$$sR5m = \underline{R5a}\ \overline{R5m}\ (W11\ \overline{D1}\ \overline{D2}\ \overline{D3}\ \overline{Dt}\ \overline{Rbt} + D5)$$

$$rR5m = \underline{R5a}\ R5m\ (W11\ \overline{D1}\ \overline{D2}\ \overline{D3}\ \overline{Dt}\ \overline{Rbt} + D5) + (Cri + M\ start)\ dc$$

$$sR4m = \underline{R4a}\ \overline{R4m}\ (W11\ \overline{D1}\ \overline{D2}\ \overline{D3}\ \overline{Dt}\ \overline{Rbt} + D5)$$

$$rR4m = \underline{R4a}\ R4m\ (W11\ \overline{D1}\ \overline{D2}\ \overline{D3}\ \overline{Dt}\ \overline{Rbt} + D5) + (Cri + M\ start)\ dc$$

$$sR3m = \underline{R3a}\ \overline{R3m}\ (W11\ \overline{D1}\ \overline{D2}\ \overline{D3}\ \overline{Dt}\ \overline{Rbt} + D5)$$

$$rR3m = \underline{R3a}\ R3m\ (W11\ \overline{D1}\ \overline{D2}\ \overline{D3}\ \overline{Dt}\ \overline{Rbt} + D5) + (Cri + M\ start)\ dc$$

$$sR2m = \underline{R2a}\ \overline{R2m}(W11\ \overline{D1}\ \overline{D2}\ \overline{D3}\ \overline{Dt}\ \overline{Rbt} + D5)$$

$$rR2m = \underline{R2a}\ R2m\ (W11\ \overline{D1}\ \overline{D2}\ \overline{D3}\ \overline{Dt}\ \overline{Rbt} + D5) + (Cri + M\ strat)\ dc$$

$$sR1m = \underline{R1a}\ \overline{R1m}\ (W11\ \overline{D1}\ \overline{D2}\ \overline{D3}\ \overline{Dt}\ \overline{Rbt} + D5)$$

$$rR1m = \underline{R1a}\ R1m\ (W11\ \overline{D1}\ \overline{D2}\ \overline{D3}\ \overline{Dt}\ \overline{Rbt} + D5) + (Cri + M\ start)\ dc$$

$$sRpm = \underline{Rpa}\ \overline{Rpm}\ (W11\ \overline{D1}\ \overline{D2}\ \overline{D3}\ \overline{Dt}\ \overline{Rbt} + D5)$$

$$rRpm = \underline{Rpa}\ Rpm\ (W11\ \overline{D1}\ \overline{D2}\ \overline{D3}\ \overline{Dt}\ \overline{Rbt} + D5) + (Cri + M\ start)\ dc$$

The Read flip-flops are reset initially by M start, and during read, are reset by Cri at the time the information is transferred to the Buffer Register. The toggling or setting of the Read flip-flops is inhibited by W11 $\overline{D1}$ $\overline{D2}$ $\overline{D3}$ $\overline{Dt}$ $\overline{Rbt}$ + D5 while traversing the gap, except during the time defined by D5. D5 is the time that the longitudinal check character is anticipated.

K-10. SKEW ERROR DETECT, Rse

For write operations, a Skew Error Detect flip-flop is used. During normal operation all bits of a character, R6a through Rpa, toggle the Read flip-flop during Character Detect Clock, Cf, time. Any bits occurring during Character Gate Write Skew, Cs, time set the Skew Error Detect flip-flop, Rse.

$$sRse = \underline{Fb}\ Cs$$

$$rRse = (M\ start + - - -)\ dc + (\overline{Cs})\ dc$$

where:

$$Fb = (\underline{R1a} + \underline{R2a} + \underline{R3a} + \underline{R4a} + \underline{R5a} + \underline{R6a} + \underline{Rpa})\ \overline{Rfb}$$

If Rse is set, Error Detector, Wes, is triggered.

$$sWes = (\underline{Rse}) \quad + - - -$$

K-11. BUFFER REGISTER, R6b through Rpb

Read flip-flops R6m through Rpm present characters to the Buffer Register. If the Buffer Register is not storing the previous character, it accepts the character held in the Read flip-flops.

$$sR6b = \underline{Ri}\ R6m$$

$$rR6b = \underline{Ri}\ \overline{R6m}\ R6b + (M\ start)\ dc$$

$$sR5b = \underline{Ri}\ R5m$$

$$rR5b = \underline{Ri}\ \overline{R5m}\ R5b + (M\ start)\ dc$$

$$sR4b = \underline{Ri}\ R4m$$

$$rR4b = \underline{Ri}\ \overline{R4m}\ R4b + (Mstart)\ dc$$

$$sR3b = \underline{Ri}\ R3m$$

$$rR3b = \underline{Ri}\ \overline{R3m}\ R3b + (M\ start)\ dc$$

$$sR2b = \underline{Ri}\ (R2m\ \overline{W9}\ W11 + - - -)$$

$$rR2b = \underline{Ri}\ (\overline{R2m}\ \overline{W9}\ W11 + (M\ start)\ dc + - - -)$$

$$sR1b = \underline{Ri}\ (R1m\ \overline{W9}\ W11 + - - -)$$

$$rR1b = \underline{Ri}\ (\overline{R1m}\ \overline{W9}\ W11\ R1b + (M\ start)\ dc + - - -)$$

$$sRpb = \underline{Ri}\ (Rpm\ \overline{W9}\ W11 + - - -)$$

$$rRpb = \underline{Ri}\ (\overline{Rpm}\ \overline{W9}\ W11 + (M\ start)\ dc + - - -$$

Clocking term, Ri, normally occurs when Cr occurs.

$$Ri = \overline{W9}\ W11\ (Cr\ \overline{Rcd} + - - -)$$

However, if the W Buffer is delayed in accepting a character from the Buffer Register due to the program, or due to the Y and W Buffer Interlace timing requirements, Ri is delayed until W5 is set.

$$Ri = \overline{W9}\ W11\ (\overline{W5}\ Rcd\ Rfd + - - -)$$

K-12. RESET READ FLIP-FLOPS

The Read flip-flops, R6m through Rpm, hold a character until the Buffer Register accepts it. The transfer from the Read flip-flops to the Buffer Register is effected by clock term Ri (see paragraph K-11). Ri is also used to trigger one-shot, Cri, which resets the Read flip-flops (see paragraph K-9).

$$sCri = \underline{Ri}\ \overline{W9}\ W11$$

$$rCri = 0.5\ microseconds\ after\ sCri$$

K-13. LONGITUDINAL PARITY, READ

The Write Data Register, M6 through Mp, is used during read processes to monitor the longitudinal parity of the record being read. Each time the Read flip-flop has a character, as evidenced by Cr, the Write Data Register toggles.

$$sM6 = \underline{Mi}\ (\overline{W9}\ W11\ R6m\ \overline{M6} + - - -)$$

$$rM6 = \underline{Mi}\ (\overline{W9}\ W11\ R6m\ M6 + (M\ start)\ dc + - - -)$$

$$sM5 = \underline{Mi}\ (\overline{W9}\ W11\ R5m\ \overline{M5} + - - -)$$

$$rM5 = \underline{Mi}\ (\overline{W9}\ W11\ R5m\ M5 + (M\ start)\ dc + - - -)$$

$$sM4 = \underline{Mi}\ (\overline{W9}\ W11\ R4m\ \overline{M4} + - - -)$$

$$rM4 = \underline{Mi}\ (\overline{W9}\ W11\ R4m\ M4 + (M\ start)\ dc + - - -)$$

$$sM3 = \underline{Mi}\ (\overline{W9}\ W11\ R3m\ \overline{M3} + - - -)$$

$$rM3 = \underline{Mi}\ (\overline{W9}\ W11\ R3m\ M3 + (M\ start)\ dc + - - -)$$

$$sM2 = \underline{Mi}\ (\overline{W9}\ W11\ R2m\ \overline{M2} + - - -$$

$$rM2 = \underline{Mi}\ (\overline{W9}\ W11\ R2m\ M2 + (M\ start)\ dc + - - -)$$

$$sM1 = \underline{Mi}\ (\overline{W9}\ W11\ R1m\ \overline{M1} + - - -)$$

$$rM1 = \underline{Mi}\ (\overline{W9}\ W11\ R1m\ M1 + (M\ start)\ dc + - - -)$$

$$sMp = \underline{Mi}\ (\overline{W9}\ W11\ Rpm\ Mp + - - -)$$

$$rMp = \underline{Mi}\ (\overline{W9}\ W11\ Rpm\ Mp + (M\ start)\ dc + - - -)$$

where:

$$Mi = Cr + - - -$$

K-14. CLOCK DETECTION

During read process, the Read flip-flops are set during Character Detect Clock, Cf, time and during Character Gate Read, Cr, time. The falling edge of Cr normally initiates the clock detection cycle by triggering the Clock Detection flip-flop, Rcd. Rcd indicates to the W Buffer that a character is available in the Buffer Register.

$$sRcd = \underline{Cr}\ \overline{W9}\ W11\ \overline{Rcd} + - - -$$

$$Ecm = W11\ \overline{D1}\ \overline{D2}\ \overline{D3}\ \overline{Dt}\ \overline{W5}\ \overline{W6}\ Rcd\ \overline{W0}\ \overline{Rbi}\ (Mf + Mr)$$

When the W Buffer acknowledges receipt of the clock (i.e., W6 is set), Rcd is reset.

$$rRcd = \underline{\overline{W5}\ W6\ Q2}\ \overline{Rfd}\ Rcd + (M\ start + Rbi)\ dc$$

If the W Buffer is delayed (due to the program or W and Y Buffer Interlace timing considerations) in its acceptance of the clock, Ecm, then Rcd is reset. If the next Cr occurs while Rcd is still set, the Registers-Full Detect flip-flop, Rfd, is set. Rfd set infers that a character is present in both the Read flip-flops and the Buffer Register.

$$sRfd = \underline{Cr}\ \overline{W9}\ W11\ Rcd + - - -$$

Transfer of the Read flip-flops to the Buffer Register is delayed until W5 is set.

$$Ri = \overline{W9}\ W11\ (Cr\ \overline{Rcd} + \overline{W5}\ Rcd\ Rfd) + - - -$$

When W5 is set, Rfd is reset but Rcd remains set indicating to the W Buffer the presence of another character in the Buffer Register.

$$rRcd = \underline{\overline{W5}\ W6\ Q2}\ \overline{Rfd}\ Rcd + - - -$$

$$rRfd = \underline{\overline{W5}\ \overline{W9}\ W11\ Rcd}\ Rfd$$

An error signal is generated if timing delays for the W Buffer operation exceed the storage capability of the Read flip-flops and Buffer Register (i.e., a third character is attempting to enter the Read flip-flops).

$$sWes = \underline{(Cf\ Rcd\ Rfd\ \overline{W9}\ W11)} \quad + - - -$$

L. DATA TRANSLATION

L-1. DATA MODE SELECT

Data Mode Select flip-flop, Me, permits reading or recording in a BCD or binary mode.

$$sMe = \underline{M\ start\ Q2}\ \overline{C14}\ \overline{Me}$$

$$rMe = \underline{M\ start\ Q2}\ C14\ Me + - - -$$

BCD information is recorded with even parity; binary information is recorded with odd parity.

L-2. BCD OUTPUT (See Table 1)

If Me is set during output, data from the computer in SDS internal code is converted to IBM-BCD interchange code for recording on magnetic tape. During write operations, data from the W Buffer Character Register, R6 through Rp, suitably translated, is used to set or reset the Write Data Register, M6 through Mp.

$$R5w = (W9\ W11\ R5 + W9\ W11\ Me\ Rp\ \overline{R1}\ \overline{R2}\ \overline{R3}\ \overline{R4}\ \overline{R5}\ \overline{R6} + - - -)\ W11$$

$$R3w = (W9\ W11\ R3 + W9\ W11\ Me\ Rp\ \overline{R1}\ \overline{R2}\ \overline{R3}\ \overline{R4}\ \overline{R5}\ \overline{R6} + - - -)\ W11$$

$$R1w = (W9\ W11\ Me\ Rl\ \overline{R2} + W9\ W11\ Me\ \overline{R1}\ R2 + - - -)\ W11$$

$$Rpw = (W9\ W11\ Me\ Rp\ R2 + W9\ W11\ Me\ \overline{Rp}\ \overline{R2} + - - -)\ W11$$

Rpw, R5w, R3w, and R1w, set or reset their corresponding Write Data Register flip-flops. R6, R4, and R2 require no translation and effectively set or reset their corresponding Write Data Register flip-flops directly.

L-3. BINARY OUTPUT

If Me is reset during output, binary data from the computer are recorded on tape in binary code. During write operations data from the W Buffer Character Register, R6 through Rp, are used to set or reset the Write Data Register, M6 through Mp.

$$R5w = (W9\ W11\ R5 + - - -)\ W11$$

$$R3w = (W9\ W11\ R3 + - - -)\ W11$$

$$R1w = (W9\ W11\ \overline{Me}\ R1 + - - -)\ W11$$

$$Rpw = (W9\ W11\ \overline{Me}\ Rp + - - -)\ W11$$

Rpw, R5w, R3w and R1w set or reset their corresponding Write Data Register flip-flops. R6, R4, and R2 set or reset their corresponding Write Data Register flip-flops directly.

L-4. BCD Input (see Table 1)

If Me is set during input, data from the tape in IBM BCD interchange code will be converted to SDS internal code. Data are derived from the Buffer Register, R6b through Rpb, suitably modified by the translation circuits and sent to the W Buffer Character Register, R6 through Rp.

$$Zw6 = R6w = W11\ R6b$$

$$Zw5 = R5w = \overline{W9}\ W11\ Me\ R5b$$

$$\overline{(\overline{Rpb}\ \overline{R1b}\ \overline{R2b}\ R3b\ \overline{R4b}\ R5b\ \overline{R6b})} + - - -$$

$$Zw4 = Rw4 = W11\ R4b$$

$$Zw3 = R3w = \overline{W9}\ W11\ Me\ R3b$$

$$\overline{(\overline{Rpb}\ \overline{R1b}\ \overline{R2b}\ R3b\ \overline{R4b}\ R5b\ \overline{R6b})} + - - -$$

$$Zw2 = R2w = W11\ R2b$$

$$Zw1 = R1w = \overline{W9}\ W11\ Me\ R1b\ \overline{R2b}$$

$$+ \overline{W9}\ W11\ Me\ \overline{R1b}\ R2b + - - -$$

$$Zwp = Rpw = \overline{W9}\ W11\ Me\ \overline{Rpb\ R2b}$$

$$+ \overline{W9}\ W11\ Me\ Rpb\ R2b + - - -$$

L-5. BINARY INPUT

If Me is reset during input, binary data from the tape will be input to the computer in binary code. Data are derived from the Buffer Register, R6b through Rpb and sent to the W Buffer Character Register, R6 through Rp.

$$Zw6 = R6w = W11\ R6b$$

$$Zw5 = R5w = \overline{W9}\ W11\ \overline{Me}\ R5b + - - -$$

$$Zw4 = R4w = W11\ R4b$$

$$Zw3 = R3w = \overline{W9}\ W11\ \overline{Me}\ R3b + - - -$$

$$Zw2 = R2w = W11\ R2b$$

$$Zw1 = R1w = \overline{W9}\ W11\ \overline{Me}\ R1b + - - -$$

$$Zwp = Rpw = \overline{W9}\ W11\ \overline{Me}\ Rpb + - - -$$

M. ERROR DETECTOR, Wes

An Error Detector one-shot Wes is included to detect several error situations. The error signal is sent to the W Buffer thereby permitting the computer to take corrective procedures.

$$sWe = Wes + - - -$$

$$rWe = Wc\ \overline{Wh}$$

M-1. READ, CHARACTER PARITY CHECK

The character parity on input is checked by the W Buffer.

$$sWe = \overline{W9}\ W4\ \overline{Rp}\ (T5\text{-}T0)\ \overline{Wh}\ (Np) + - - -$$

$$rWe = Wc\ \overline{Wh}$$

Character parity on input to the W Buffer is always odd parity whether in the BCD or binary modes.

M-2. READ, LONGITUDINAL PARITY CHECK

During read, the longitudinal parity is checked with the Write Data Register flip-flops, M6 through Mp. After the record has been read, all Write Data Register flip-flops should be reset; if not an error will be indicated.

$$sWes = (\underline{\overline{W9}\ W11\ Mpc\ D6}) \quad + - - -$$

rWes = 10 microseconds after sWes

where:

$$Mpc = M1 + M2 + M3 + M4 + M5 + M6 + Mp$$

Control timer, D6, enables the check to be made during the gap time, but only after it is assured that the longitudinal check character has been read.

M-3. WRITE, CHARACTER PARITY CHECK

During write operations, a read after write parity check is performed by the read flip-flops, R6m through Rpm, plus a character alternator flip-flop, Rdm.

$$sRdm = \underline{Cs}\ \overline{Rdm}\ (W11\ \overline{D1}\ \overline{D2}\ \overline{D3}\ \overline{Dt}\ \overline{Rbt} + D5)$$

$$rRdm = \underline{Cs}\ Rdm\ (W11\ \overline{D1}\ \overline{D2}\ \overline{D3}\ \overline{Dt}\ \overline{Rbt} + D5) + (Mstart)\ dc$$

The read flip-flops, R6m through Rpm, count the number of 1-bits in the seven channels by toggling on 1-bits. If Me is reset, each character should have an odd number of 1-bits, and the parity of R6m through Rpm will alternate odd and even for each character. (Toggling on ones is equivalent to doing a binary add without carry and so an odd number of ones added to a odd number of ones results in an even number of ones etc.) Rdm will also alternate for each character so the result of adding Rdm and R6m through Rpm for each character will be odd. Should this parity be even an error is indicated.

$$sWes = (\underline{W9\ W11\ \overline{D1}\ \overline{D2}\ \overline{D3}\ \overline{Dt}\ \overline{Me}\ Zp\ Rdm\ Cs})$$

$$+ (\underline{W9\ W11\ \overline{D1}\ \overline{D2}\ \overline{D3}\ \overline{Dt}\ Me\ \overline{Zp}\ \overline{Rdm}\ Cs}) \quad +---$$

where:

$$Zp = \overline{Yp}\ \overline{Rpm}\ R6m + \overline{Yp}\ Rpm\ \overline{R6m} + Yp\ \overline{Rpm}\ \overline{R6m} + Yp\ Rpm\ R6m$$

$$Yp = \overline{Xp}\ \overline{R5m}\ R4m + \overline{Xp}\ R5m\ \overline{R4m} + Xp\ \overline{R5m}\ \overline{R4m} + Xp\ R5m\ R4m$$

$$Xp = \overline{R3m}\ \overline{R2m}\ R1m + \overline{R3m}\ R2m\ \overline{R1m} + R3m\ \overline{R2m}\ \overline{R1m} + R3m\ R2m\ R1m$$

BCD Character	Magnetic Tape Code	Memory Code	BCD Character	Magnetic Tape Code	Memory Code
ø	12	00	-	40	40
1	01	01	J	41	41
2	02	02	K	42	42
3	03	03	L	43	43
4	04	04	M	44	44
5	05	05	N	45	45
6	06	06	O	46	46
7	07	07	P	47	47
8	10	10	Q	50	50
9	11	11	R	51	51
SPACE		12	CAR. RET.	52	52
#	13	13	$	53	53
@	14	14	*	54	54
:	15	15	]	55	55
>	16	16	;	56	56
✓	17	17	△	57	57
&	60	20	↻	20	60
A	61	21	/	21	61
B	62	22	S	22	62
C	63	23	T	23	63
D	64	24	U	24	64
E	65	25	V	25	65
F	66	26	W	26	66
G	67	27	X	27	67
H	70	30	Y	30	70
I	71	31	Z	31	71
BACK SPACE	72	32	TAB	32	72
.	73	33	,	33	73
¤	74	34	%	34	74
[	75	35	~	35	75
<	76	36	\	36	76
‡	77	37	⊕	37	77

Table 1. Character Code Conversion Chart

If Me is set, each character should have an even number of ones. Therefore, when R6m through Rpm indicates an odd number of ones, an error indication is generated.

$$sWes = (\underline{W9\ W11\ \overline{D1}\ \overline{D2}\ \overline{D3}\ \overline{Dt}\ Me\ Zp\ Cs}) \quad + - - -$$

M-4. WRITE, LONGITUDINAL PARITY CHECK

After the record and its longitudinal parity character have been read, the Read flip-flops, R6m through Rpm should all be reset. If they are not, an error is signalled.

$$sWes = (\underline{W9\ W11\ Rpc\ D6})$$

where:

$$Rpc = R1m + R2m + R3m + R4m + R5m + R6m + Rpm$$

Control Timer D6 enables the check to be made during the gap time but only after it is assured that the longitudinal check character has been read.

M-5. WRITE, AMPLITUDE ERROR

During a write process, should the amplitude of the signal being read be of insufficient amplitude, an Amplitude Error Sense, Aes, signal is generated. Aes triggers the Amplitude Error Detect Timer, Ae.

$$sAe = \underline{Aes}\ Ma$$

$$rAe = 10 \text{ microseconds after } sAe$$

Should a Read Amplifier, R6a through Rpa detect a marginally recorded signal an error is signalled.

$$sWes = (\underline{W9\ W11\ Ae\ \overline{D1}}) \quad + - - -$$

M-6. WRITE, SKEW ERROR

If, during a record operation, a character is read whose bits, R6a through Rpa are skewed such that one or more signals occur during Character Gate Write Skew, Cs time, then the Skew Error Detect flip-flop, Rse, is set.

$$sRse = \underline{Fb}\ Cs$$

$$rRse = (\overline{Cs})\ dc + - - -$$

The fall of Rse will set Wes.

$$sWes = (\underline{Rse}) \quad + - - -$$

M-7. WRITE, TIMING ERROR

If during a record operation data are required by the Write Data Register but are not available, Registers Full Detect flip-flop Rfd is set and then reset.

$$sRfd = \underline{Mc}\ W9\ W11\ Rcd\ \overline{Rfd} + - - -$$
$$rRfd = \underline{\overline{Mc}}\ W9\ W11\ Rfd + - - -$$

The fall of Rfd will set Wes.

$$sWes = (\underline{Rfd\ Rpb\ W9\ W11}) \quad + - - -$$

M-8. READ, TIMING ERROR

If during a read operation, data are held by both the Buffer Register and the Read flip-flops, and another character is being read, a read timing error will occur and an error is signalled.

$$sRcd = \underline{Cr}\ \overline{W9}\ W11\ \overline{Rcd} + - - -$$

$$sRfd = \underline{Cr}\ \overline{W9}\ W11\ Rcd + - - -$$

$$sWes = (\underline{Rcd\ Rfd\ Cf\ \overline{W9}\ W11}) \quad + - - -$$

N. TAPE MARK DETECT

Tape Mark Detect flip-flop Rtm is provided to indicate, during read processes, that an End-of-File record has been read.

$$sRtm = (M\ start)\ dc$$

$$rRtm = \overline{W5}\ Rcd\ Rtm\ \overline{Rfm}$$

where:

$$Rfm = \overline{Rpb}\ \overline{R1b}\ \overline{R2b}\ R3b\ R4b\ R5b\ R6b$$

Term Rfm defines a tape mark character. As a read operation is begun, Rtm is set, assuming that the record to be read is a tape mark. If any character within the record is not a tape mark, then Rtm will reset. The contents of Rtm may be tested by SKS13610 after the record has been read.

P. READ INHIBIT

Provisions are made to ignore the remainder of the record after reading a portion of it. The tape proceeds to the gap, and clock signals to the W Buffer are inhibited. W Buffer Clock Inhibit Detect flip-flop, Rbi, controls the skipping over of the remainder of the record, and is set by an EOM13610.

$$sRbi = \underline{M\ control}\ \overline{C12}\ C13\ C14\ C15\ C16\ \overline{Rbi}$$

$$rRbi = (M\ start)\ dc$$

Setting of Rbi inhibits clocks to the W Buffer only if at least two characters have been read and W0 is set.

$$Ecm = W11\ \overline{D1}\ \overline{D2}\ \overline{D3}\ \overline{Dt}\ \overline{W5}\ \overline{W6}\ \overline{W0}\ \overline{Rbi}\ Rcd\ (Mf + Mr)$$

If clocks were inhibited before W0 was set, then the tape would not generate a gap signal if tested with SKS 12610.

To preclude a read timing error due to the W Buffer not recognizing the detected clocks, the Clock Detect, Rcd, and the Registers Full Detect, Rfd, flip-flops are reset.

$$rRcd = (Rbi + - - -)\ dc + - - -$$

$$rRfd = (Rbi + - - -)\ dc + - - -$$

$$sWes = (\underline{Rfd\ Rcd\ Cf\ \overline{W9}\ W11})$$

The character parity of the information inhibited is not checked. However, the longitudinal parity of the whole block is checked.

Q. GAP INTERRUPT ENABLE

Under normal circumstances, gap may be tested by SKS 12610. For special systems applications however, a Gap Interrupt Enable flip-flop is included for use in conjunction with the priority interrupt system. Should a particular systems application require a gap interrupt, an EOM12610 will enable the gap interrupt by setting Gap Interrupt Enable flip-flop Mgi.

$$sMgi = \underline{M\ control}\ \overline{C12}\ C13\ \overline{C14}\ C15\ C16\ \overline{Mgi}$$

$$rMgi = (\overline{W11\ M\ start})\ dc$$

Q-1. GAP INTERRUPT

If Mgi is set, a Gap Interrupt signal, Ig, will be generated.

$$Ig = W11\ Mgi\ D6$$

Control Timer, D6, generates Ig only after it is assured that the longitudinal check character has been read.

R. TEST MODE

A TEST mode switch is included for system checkout and testing. When the TEST switch on a 9246 Electronics Unit is in the TEST (T) position, addressing that unit for write operations will simulate many of the functions of the 9248 and 9246 units without the necessity of actually moving the tape. All functions for normal writing proceed as usual. Instead of storing data on tape, information is returned directly onto the read busses, R6a through Rpa for read-after-write checking. Because data does not travel from write to read heads, the inter-record block timing is decreased by approximately 4 milliseconds.

Tape motion and write activation are inhibited.

$$\text{Forward Activate} = Ma\ Mf\ \overline{Test}$$

$$\text{Write Activate} = Ma\ W9\ W11\ \overline{Test}$$

The collectors of the Read Deskew Timers, Forward and Reverse are held true by (Ma Test) dc to permit the Test signal, R6at through Rpat to control the Read Bus signals, R6a through Rpa. Test signals are derived from the Write Deskew Timers, M6s through Mps.

$$R6at = Ma\ Test\ M6s + Ma\ \overline{Test}$$

$$R5at = Ma\ Test\ M5s + Ma\ \overline{Test}$$

$$R4at = Ma\ Test\ M4s + Ma\ \overline{Test}$$

$$R3at = Ma\ Test\ M3s + Ma\ \overline{Test}$$

$$R2at = Ma\ Test\ M2s + Ma\ \overline{Test}$$

$$R1at = Ma\ Test\ M1s + Ma\ \overline{Test}$$

$$Rpat = Ma\ Test\ Mps + Ma\ \overline{Test}$$

Term Ma $\overline{Test}$ is used to permit the collectors of the Test Signal buffers to remain high during normal operation, thereby permitting the Read Deskew Timers, Forward or Reverse, to control the Read Bus Signals, R6a through Rpa.

$$R6a = R6af + R6ar + R6at$$

$$R5a = R5af + R5ar + R5at$$

$$R4a = R4af + R4ar + R4at$$

$$R3a = R3af + R3ar + R3at$$

$$R2a = R2af + R2ar + R2at$$

$$R1a = R1af + R1ar + R1at$$

$$Rpa = Rpaf + Rpar + Rpat$$

Due to the effect of the Write-Deskew Timers, M6s through Mps, being adjusted for write-to-read head deskewing, the Read Bus Signal will exhibit a "static" skew. The "static" skew should not be a sufficient magnitude to generate write skew errors.

Although writing is inhibited, the Write Toggle flip-flops will toggle. The technique for generating the longitudinal check character is identical to that used during normal operation.

Table 2. Glossary of Logic Terms used in 9246 Magnetic Tape Electronics Unit

Ae	Amplitude sense error one-shot signal.
Aes	Amplitude sense output signal from read amplifiers.
Bor	Signal denoting that Load-Point photosense tab is positioned under the photosense assembly.
Bot	Beginning of tape flip-flop.
Ch1 Read through Ch7 Read	Physical numbering of the read head channels. Ch1 is nearest operator.
Ch1 Write through Ch7 Write	Physical numbering of the write head channels. Ch1 is nearest operator.
C12 thru C16	Computer C Register signals used to enable Siot and to designate rewind.
C21, C22, C23	Computer C Register signals which define a particular tape unit to be addressed.
Da	A signal which indicates that the DENSITY SELECT switch is positioned at 200.
Db	A signal which indicates that the DENSITY SELECT switch is positioned at 556.
Dc	A signal which indicates that the DENSITY SELECT switch is positioned at 800.
Debt	A one-shot signal generated when the ends of tape are detected.
Dr	A one-shot signal which delays Ready while capstans are decelerating after rewind.
Eor	Signal denoting that the End-of-Reel photosense tab is positioned under the photosense assembly.
Eot	End of tape flip-flop which is true if tape is at or beyond the End-of-Reel photosense tab.
File Protect	A signal which is true if File Protect Ring is not inserted in the tape reel. Writing on tape is inhibited.
Forward Actuate	A signal which actuates the tape in the forward direction if the Manual Control Panel switch is in AUTOMATIC.

Table 2. (Continued)

Ib	Signal generated for use with priority interrupt system to denote the Load Point has been encountered.
Ie	Signal generated for use with priority interrupt system to denote the End-of-Reel has been encountered.
K1	Rewind relay which permits changing of capstan speed.
K2	Photosense relay which permits disengaging the Manual Control Panel when in MANUAL when Bor or Eor are encountered.
K3	File Protect relay which permits writing if File Protect Ring is inserted in the tape reel.
Ma	Flip-flop indicating tape unit has been addressed for any operation except rewind.
Mad	Signal used to lock out addressing a tape unit, except for rewind, if any other tape unit is presently addressed.
Mb	Flip-flop indicating that the tape unit has been addressed for rewind.
Mc	Clock signal from 9248 used during write operations.
$\overline{\text{Mca}}$	Clock signal from 9248 used for control functions.
M control	A computer generated EOM signal used to initiate a rewind.
Mf	Signal from 9248 indicating that a forward operation is requested.
Mp	Write Data Register parity flip-flop from 9248.
Mps	Write Deskew Timer one-shot for Mp.
Mpt	Write Toggle Flip-flop for Mp.
Mpw	Write Driver output for Mp.
Mr	Signal from 9248 indicating that a reverse operation is requested.
Mre	Write Toggle Erase signal from 9248.
Mrs	Write Toggle Reset Enable signal from 9248 occurring when the Longitudinal Check Character is to be recorded.
M start Q2	A computer generated EOM signal used to initiate all tape operations except rewind.
Mw	Write Toggle Clock Enable signal from 9248 occurring during intervals that data is to be recorded.
M1 thru M6	Write Data Register flip-flops containing character to be recorded.
M1s thru M6s	Write Deskew timers from M1 through M6.
M1t thru M6t	Write Toggle Flip-flops for M1 through M6.
M1w thru M6w	Write Driver outputs for M1 through M6.
Ready	Signal denoting that 9246 is not presently addressed and may be addressed.
(Ready)	Signal denoting that the TM4 is ready for AUTOMATIC operation.
Rpa	Output from Rpaf or Rpar Read Deskew Timers or Rpat test mode signal.
(Rpa)	Parity channel read amplifier output.
Rpat	Forward parity channel Read Deskew Timer output.
Rpar	Reverse parity channel Read Deskew Timer output.
Rpat	Test mode parity channel signal.
Rpy, Rpz	Parity channel differential read amplifier input.
R1a thru R6a	Output from R1af through R6af or from R1ar through R6ar Read Deskew Timers or R1at through R6at test mode signals.
(R1a) thru (R6a)	Read amplifier outputs.

Table 2. (Continued)

R1y, R1z thru R6y R6z	Differential read amplifier inputs.
Siot	Signal for input/output testing.
Test	Switch controlled signal designating test mode.
Tha	Amplitude sense threshold signal.
Thd	Read amplifier peak detector.
Unit Select	Signal designating tape unit to be addressed.
W9 W11	Signal from 9248 denoting a write operation is designated.
$\overline{W9}$ W11	Signal from 9248 denoting a read operation is designated.
Write Activate	Signal used to enable write drivers.

Table 3. Glossary of Logic Terms used in 9248 Magnetic Tape Control Unit

Ae	Signal from 9246 unit denoting an amplitude sense error has occurred while recording.
Bor	Signal from 9246 unit denoting that the Load Point photosense tab is positioned under the photosense assembly.
Cf	Clock signal generated from the first bit of a character being read.
Cr	Clock signal denoting that all bits from a character have been read during read operations.
Cri	Reset signal for Read Flip-flop Register.
Cs	Clock signal generated during record operations used to detect write skew errors.
C12 thru C23	Computer C Registers signals used for 9248 and 9246 control purposes.
Da	A signal from the selected 9246 unit designating that the DENSITY SELECT switch is positioned at 200.
Db	A signal from the selected 9246 unit designating that the DENSITY SELECT switch is positioned at 556.
Dc	A signal from the selected 9246 unit designating that the DENSITY SELECT switch is positioned at 800.
Ds	A control flip-flop used to remember that an operation is to continue.
Dt	A control flip-flop used to remember that an operation is in the process of terminating.
D1	Delay timer used to generate gaps on writing and to lock out read signals while traversing the gap on read.
D2	Delay timer triggered upon detection of gap and used to commence a tape stopping sequence.
D3	Delay timer used to generate a delayed halt signal while the tape is decelerating and to lock out read signals while traversing the gap.
D4	Delay timer used to prevent exceeding program limitations of the tape transport.
D5	Delay timer used to delay gap signal indication to the computer until the longitudinal check character has been processed.
D6	Delay timer used to strobe the longitudinal check character error indication and to provide a signal indicating gap to the priority interrupt system.
Fb	Pulse generated from the first bit of a character being read.
Gap	A signal denoting that clocks have been absent for a specified time duration depending on the position of the DENSITY SELECT switch.
Ig	Signal generated for use with the priority interrupt system to denote the gap has been encountered.
Mc	Clock signal used during write operations.
Mca	15Kc clock generator output.

Table 3. (Continued)

Mcb	41.7Kc clock generator output.
Mcc	60 Kc clock generator output.
Mcd	The selected clock generator output depending on the position of the DENSITY SELECT switch.
M control	A computer generated EOM signal used for various control functions.
Mcr	Reset term for several control flip-flops.
Me	Control flip-flop designating data mode.
Mf	Control flip-flop designating forward tape operation.
Mgi	Control flip-flop enabling the gap interrupt.
Mi	Clock signal on write used to transfer data from the computer to the Write Data Register and on read to transfer data from the read flip-flops to the Write Data Register.
Mpc	Signal denoting that the Write Data Register flip-flops are all reset.
Mp	Write Data Register parity channel flip-flop.
Mr	Control flip-flop designating reverse tape operation.
Mre	Write Toggle Erase signal to the 9246.
Mrs	Write Toggle Reset Enable signal to the 9246 occurring when the longitudinal check character is to be recorded.
M start	A computer generated EOM signal used to initiate and continue all tape operations except rewind.
Mtg	Control flip-flop used to detect the occurrence of gap.
Mw	Write Toggle Clock Enable signal to 9246 occurring during interval that data is to be recorded.
M1 thru M6	Write Data Register flip-flops used to contain character to be recorded on write and used for longitudinal check character detecting on read.
Q2	Computer pulse counter signal, high for T23 - T10 pulse times.
R1 thru R6	W Buffer Character Register data signals.
R1a thru R6a	Read data signals from 9246.
R1b, R2b	Buffer Register flip-flops used on write for longitudinal check character counting, and used in read as part of the Buffer Register to store the character to be transmitted to the computer.
R3b thru R6b	Buffer Register flip-flops used on read as part of the register to store the character to be transmitted to the computer.
R1m thru R6m	Read Flip-flops used to contain character read from tape.
R1w thru R6w	Character signals sent to the computer on read and to the Write Data Register on write.
Rbi	Flip-flop used to inhibit read clocks to the computer under control of the computer.
Rbt	Flip-flop used to inhibit reading when near Load Point.
Rcd	Clock control flip-flop used to detect the start of a read or write clock cycle to the W Buffer.
Rdm	Flip-flop used to alternate by character on read.
Rfd	Clock control flip-flop used on read or write to detect the status of the registers.
Rfb	Flip-flop used to lock out Fb after first character bit has been sensed.
Rfm	Signal defining tape mark.
Ri	Signal used to transfer Read Flip-flops to Buffer Register on read and to control Buffer Register on write.
Rpc	Signal denoting that the Read Flip-flops are all reset.
Rp	W Buffer Character Register parity channel signal.
Rpb	Buffer Register parity channel flip-flop on read, and write clock enable on write.
Rpm	Read Flip-flop used to contain parity channel bit read from tape.

Table 3. (Continued)

Rpw	Parity channel bit sent to the computer on read, and to the Write Data Register on write.
Rse	Flip-flop used to detect write skew errors.
Rtm	Flip-flop used to determine if block read was a tape mark.
Sio	Signal for input/output testing.
Wes	Error signal to W Buffer.
Whs	Halt signal.
W0	W Buffer flip-flop signal used in controlling starting and stopping tape operations.
W5	W Buffer flip-flop signal which detects that a precess should occur.
W6	W Buffer flip-flop which detects the presence of a clock.
W9	W Buffer flip-flop specifying output operations.
W10	W Buffer flip-flop specifying erase or scan operations when true and read or write operations when false if W11 is true.
W11	W Buffer flip-flop which designates magnetic tape operations.
Xp, Yp, Zp	Parity detecting signals used to detect errors while writing.

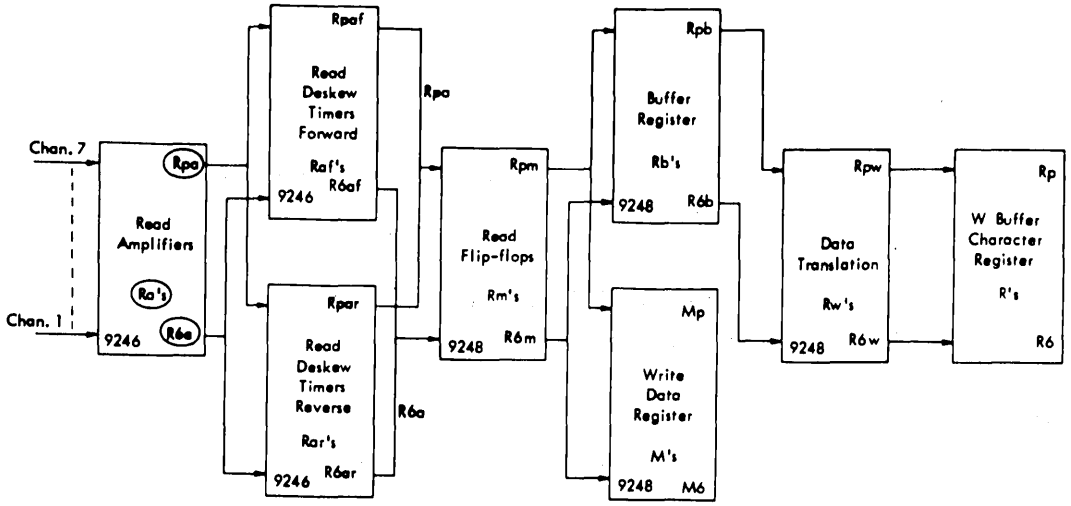

Figure 1. Magnetic Tape Read, 41.7 Kc, Data Flow Diagram

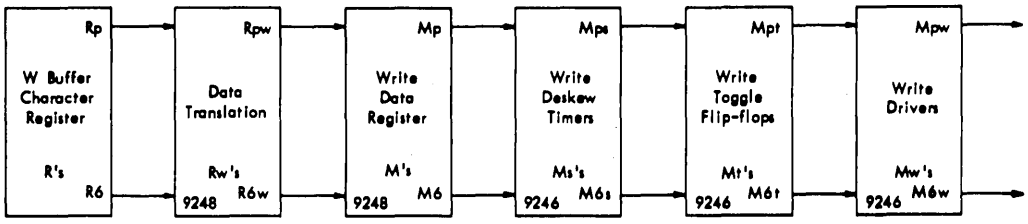

Figure 2. Magnetic Tape Write, 41.7 Kc, Data Flow Diagram

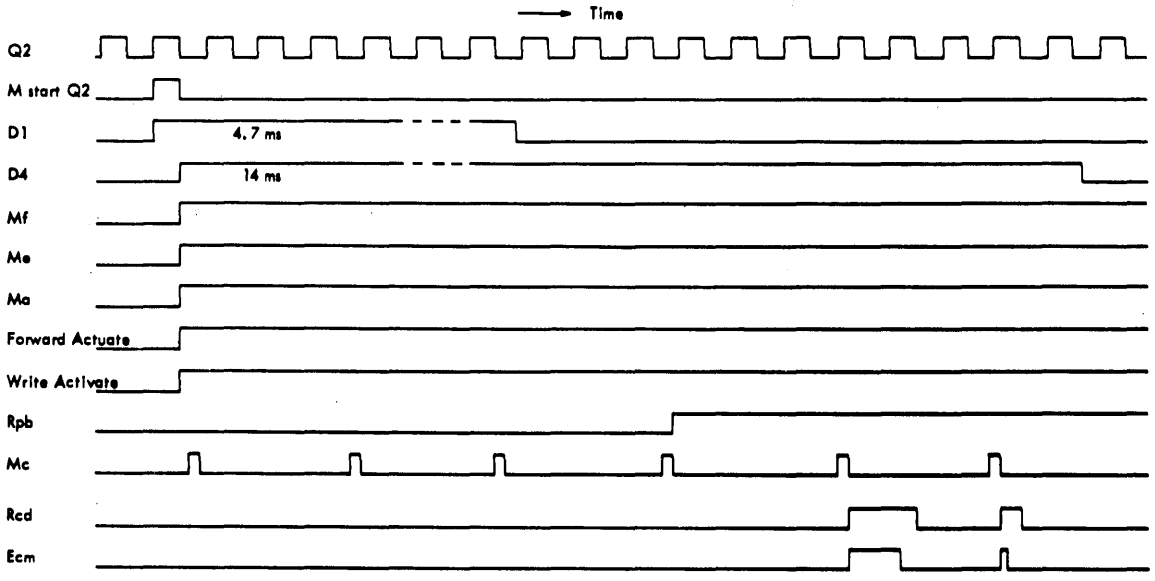

Figure 3. Magnetic Tape Write or Erase, 41.7 Kc, Initial Start Forward

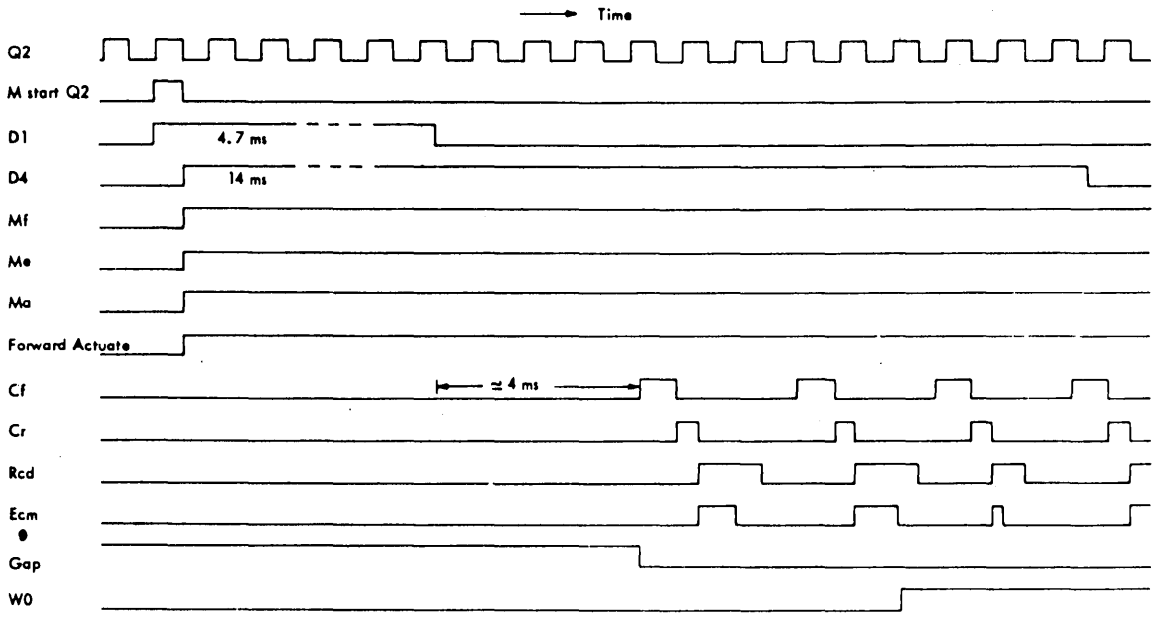

Figure 4. Magnetic Tape Read or Scan, 41.7 Kc, Initial Start Forward

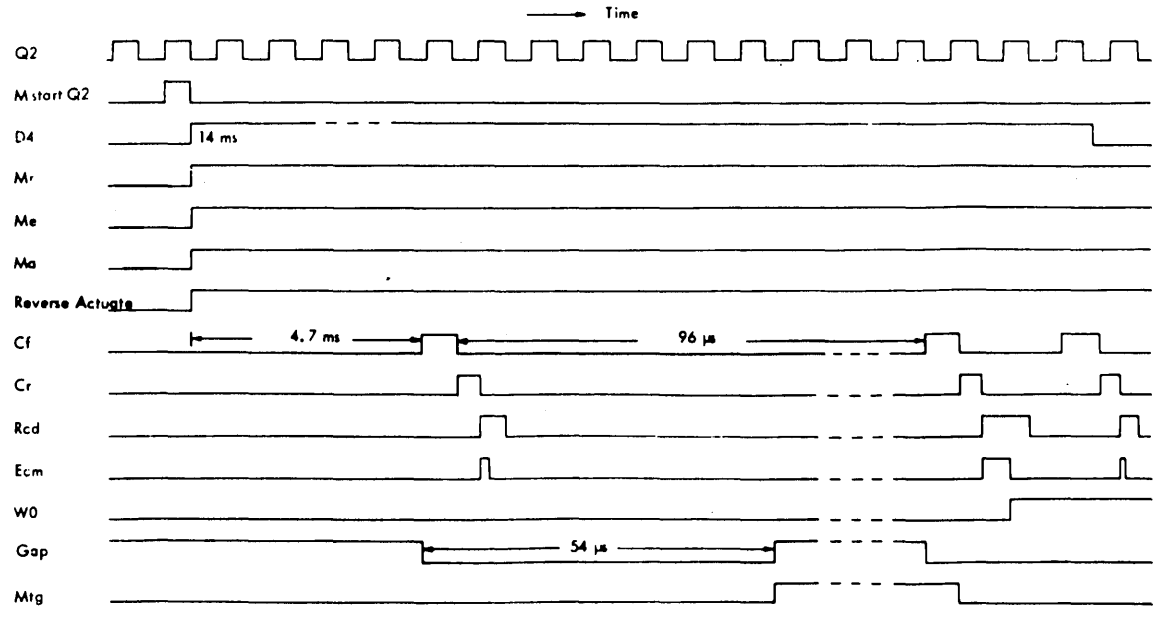

Figure 5. Magnetic Tape Read or Scan, 41.7 Kc, Initial Start Reverse

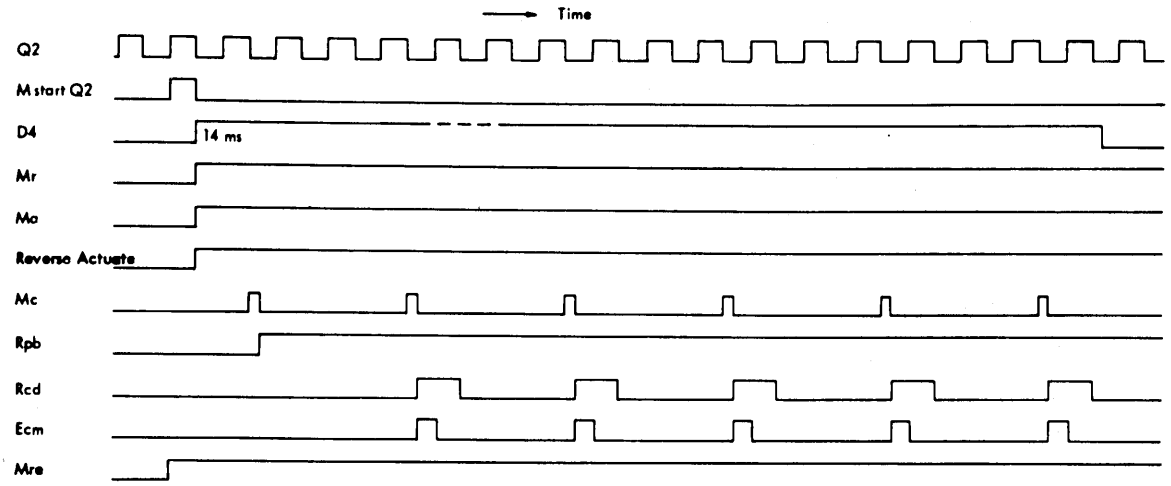

Figure 6. Magnetic Tape Erase, 41.7 Kc, Initial Start Reverse

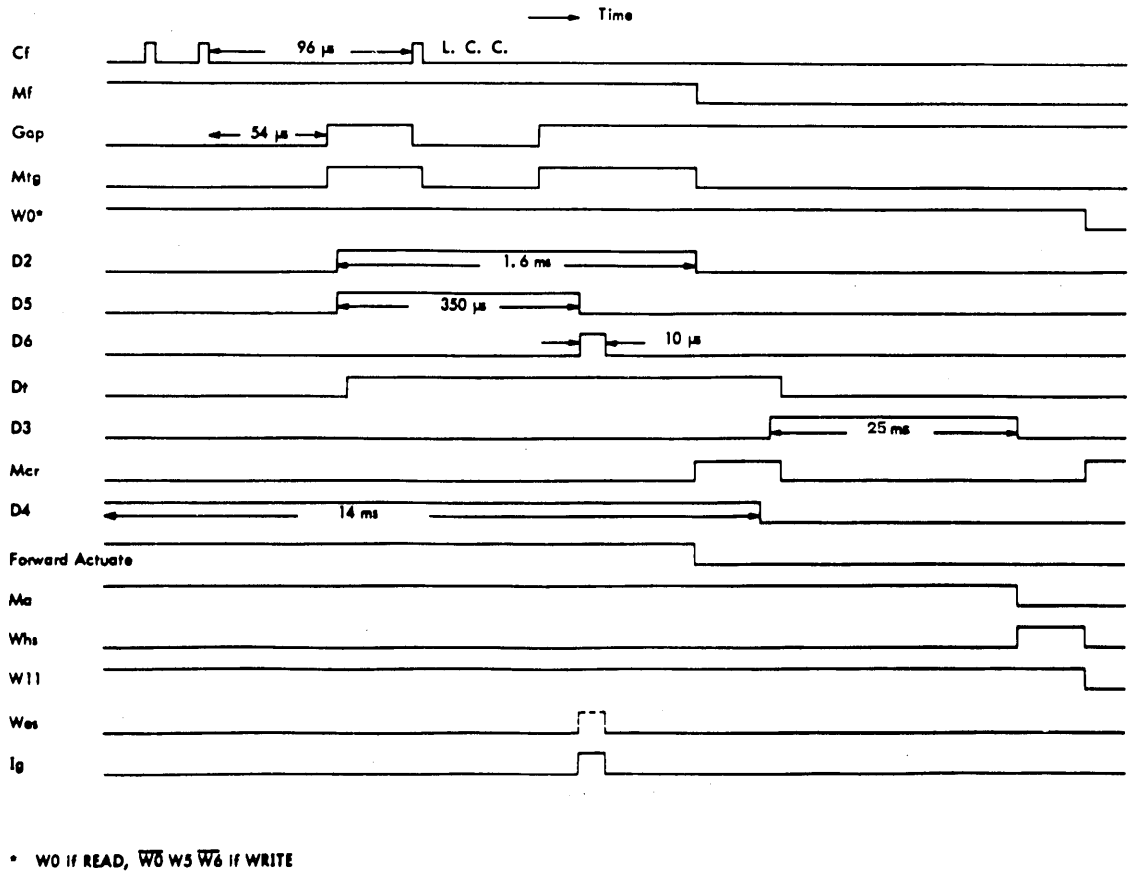

* W0 if READ, $\overline{W0}$ W5 $\overline{W6}$ if WRITE

Figure 7. Magnetic Tape Read or Write, 41.7 Kc, Forward Operation Termination

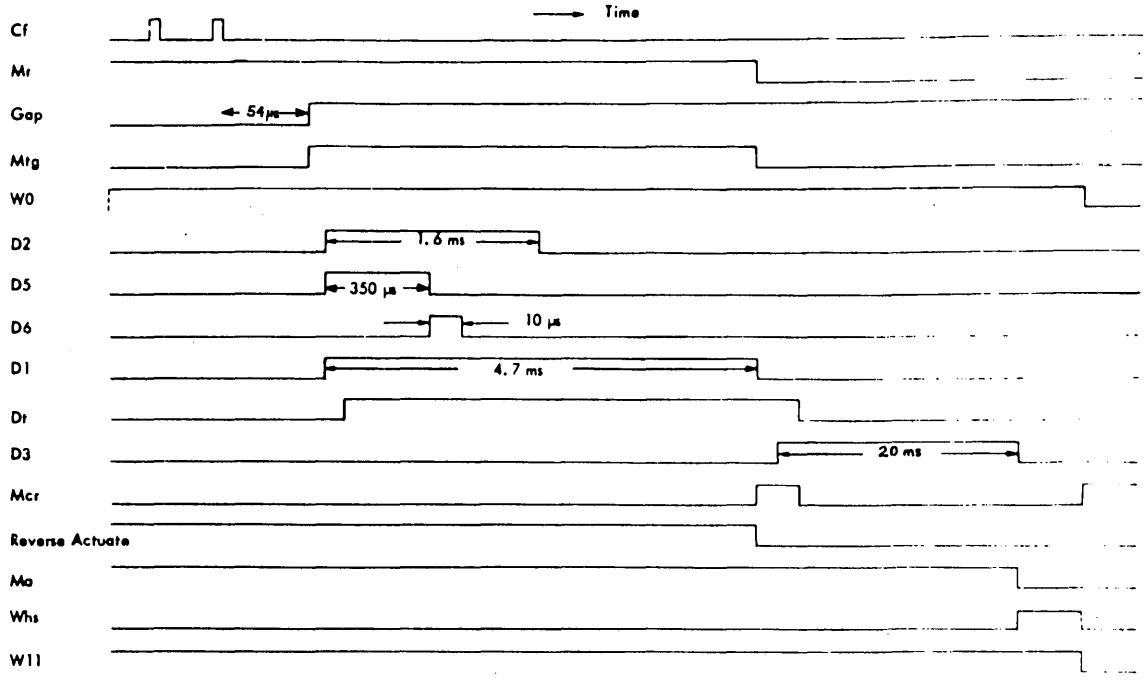

Figure 8. Magnetic Tape Read, 41.7 Kc, Reverse Operation Termination

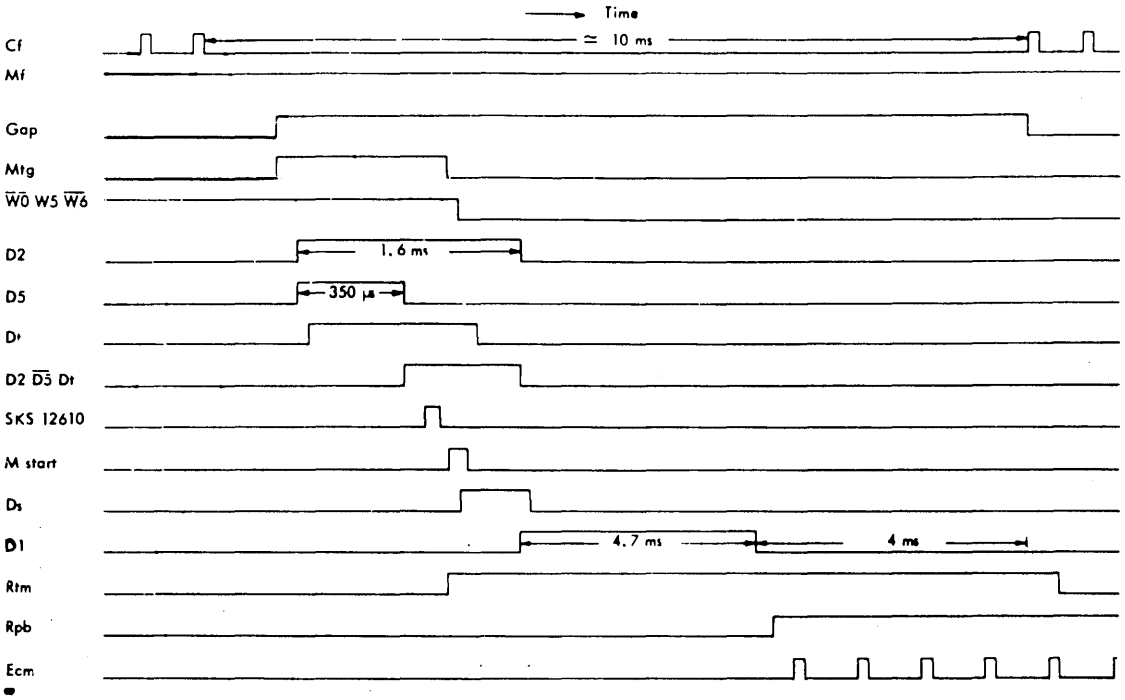

Figure 9. Magnetic Tape Write, 41.7 Kc, Forward Continue

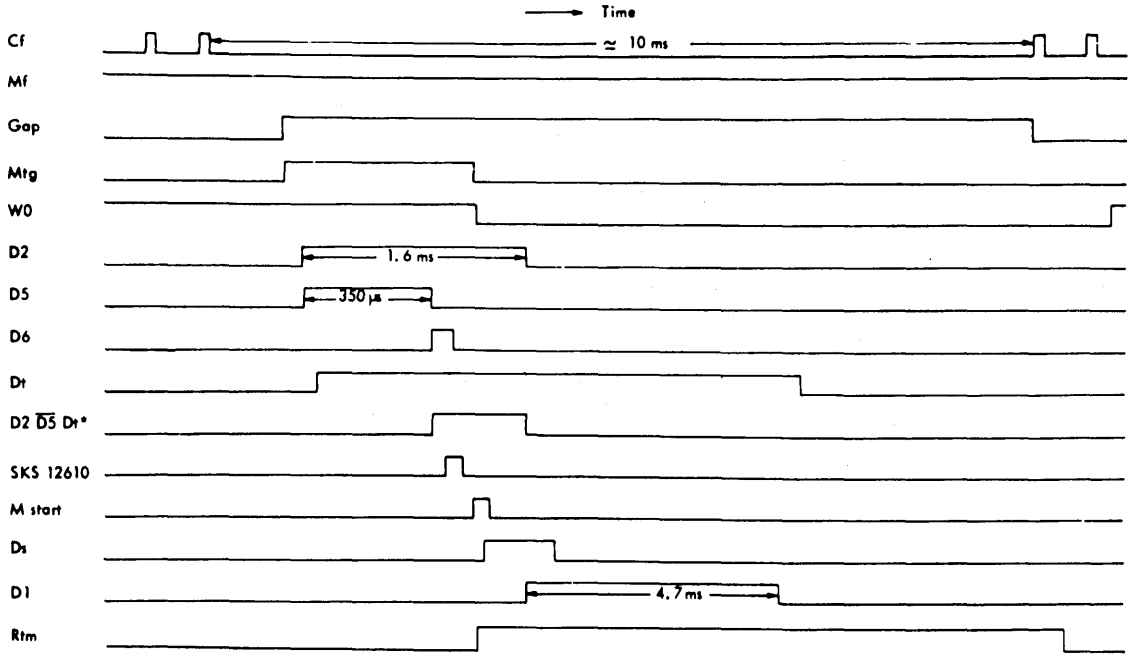

* Defines interval during which EOM to continue may occur

Figure 10. Magnetic Tape Read, 41.7 Kc, Forward Continue

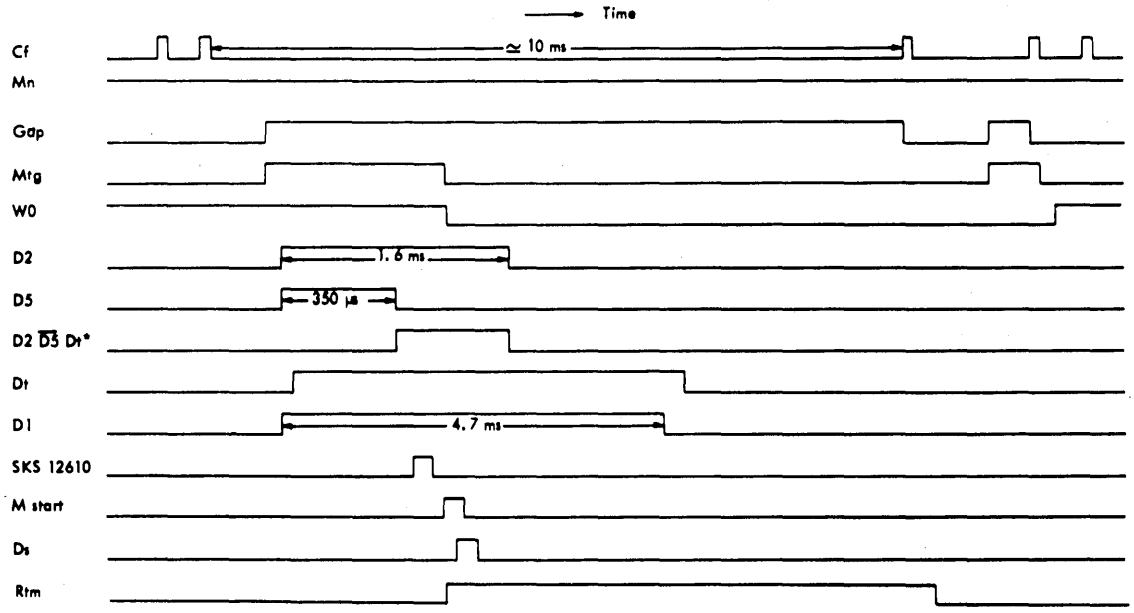

* Defines interval during which EOM to continue may occur

Figure 11. Magnetic Tape Read, 41.7 Kc, Reverse Continue

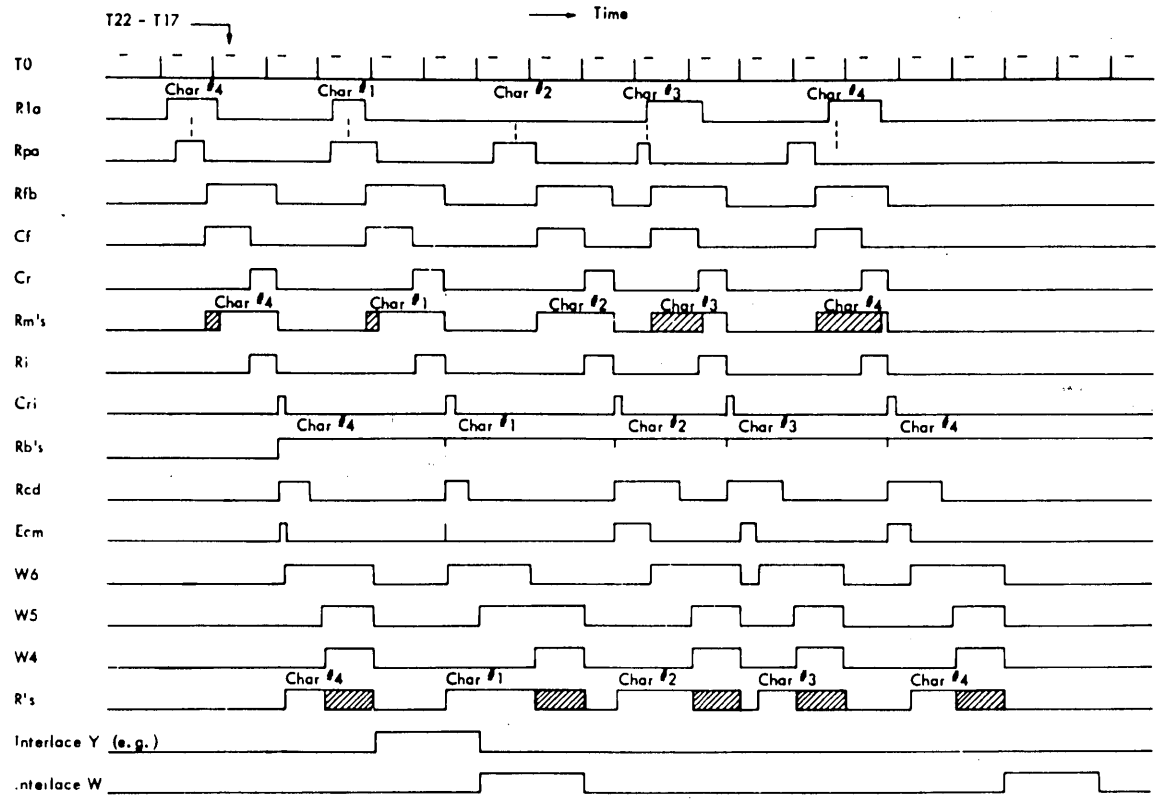

Figure 12. Magnetic Tape Read, 41.7 Kc

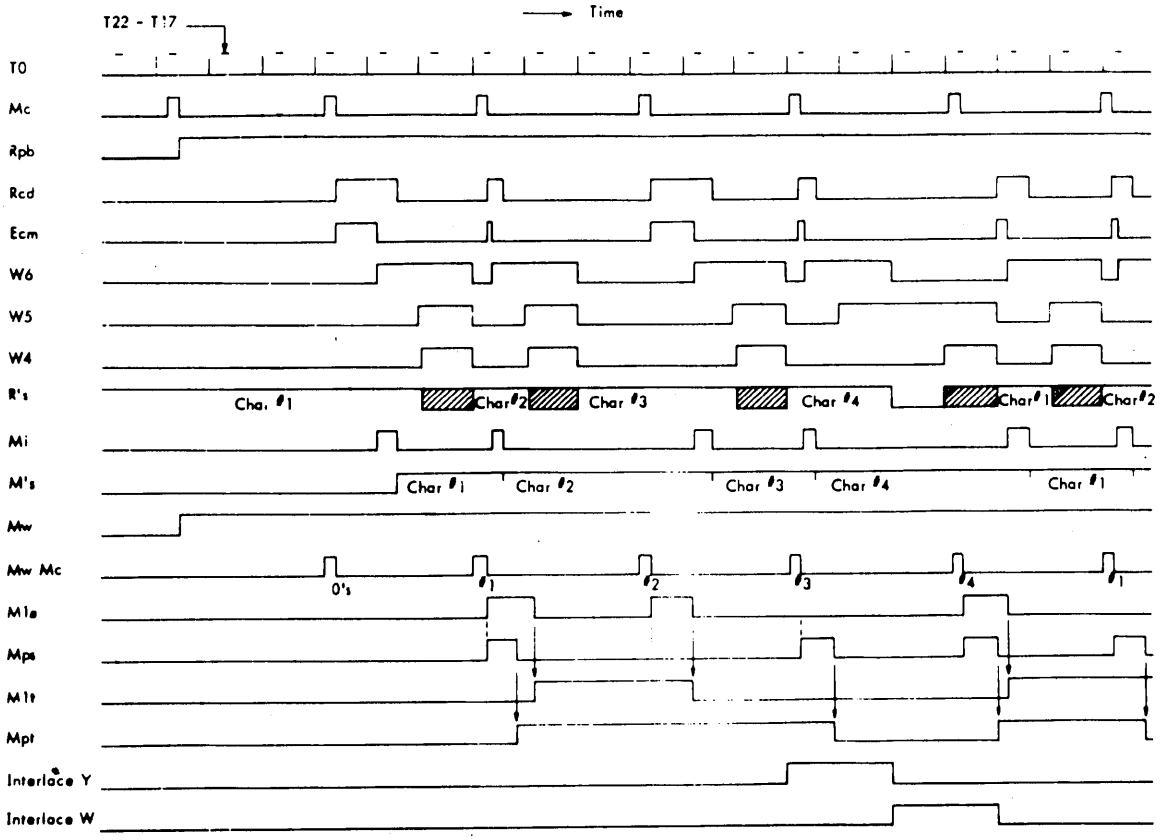

Figure 13. Magnetic Tape Write, 41.7 Kc

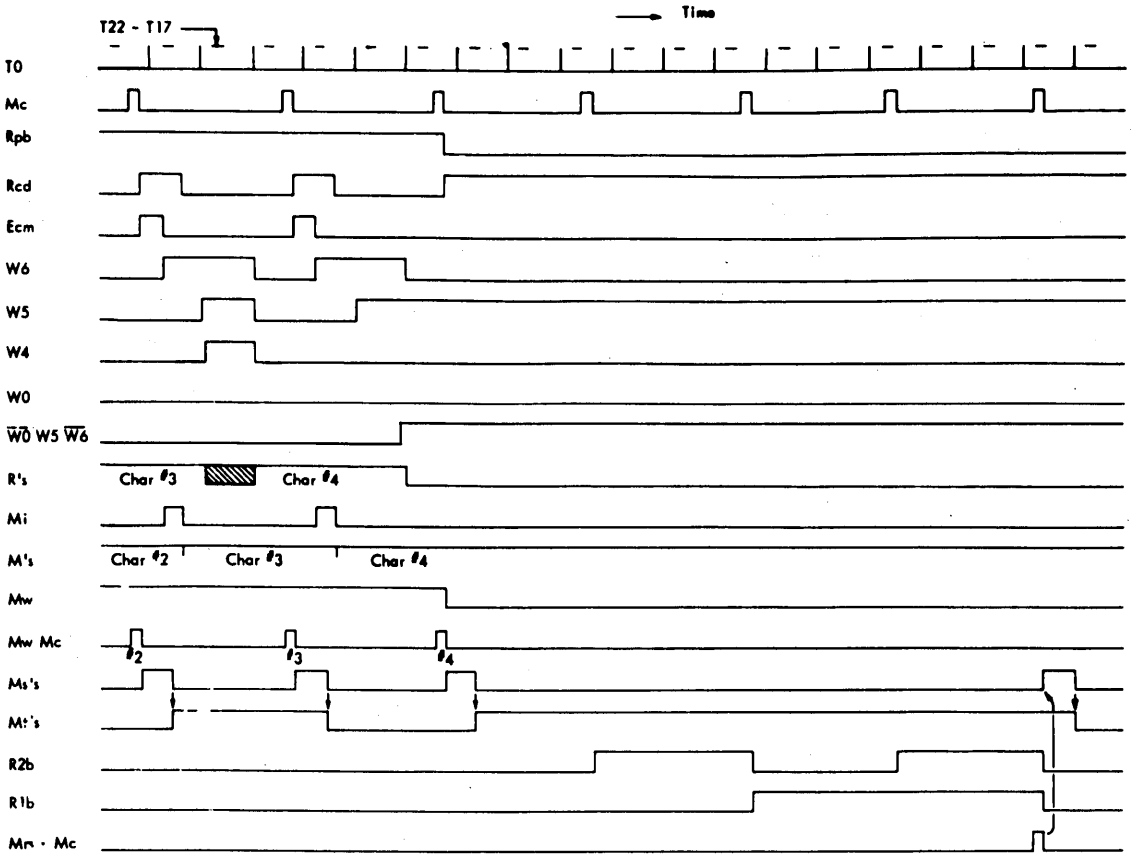

Figure 14. Magnetic Tape Write, 41.7 Kc, Terminate Output

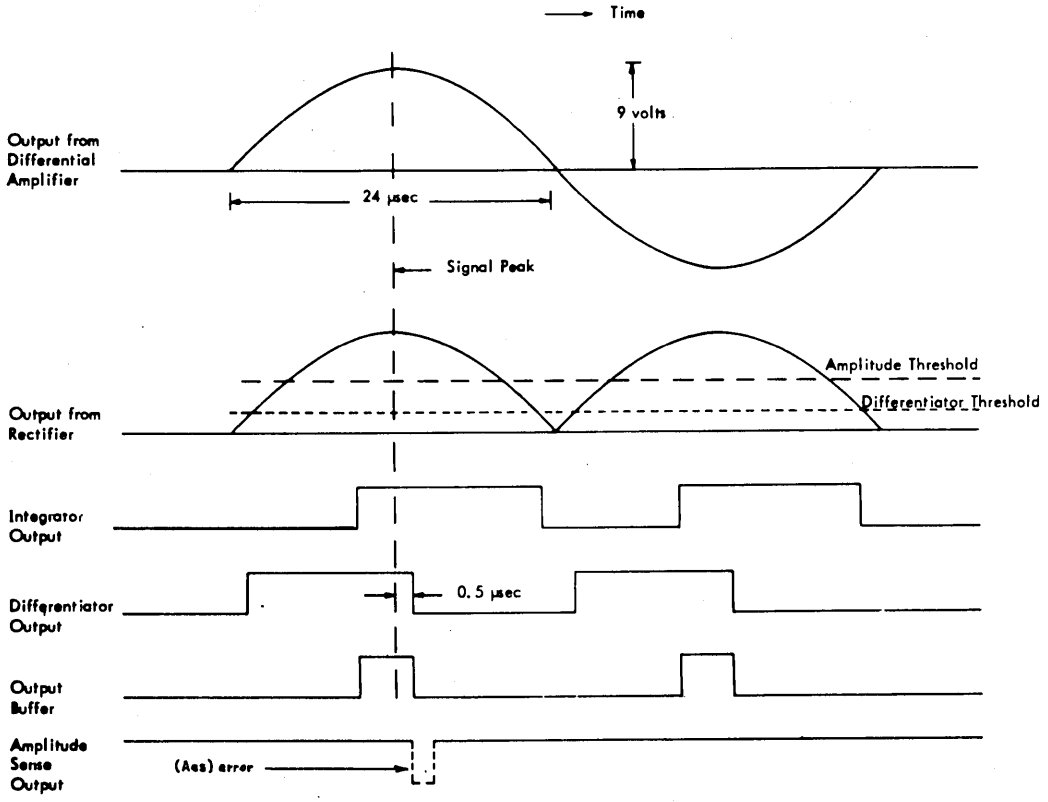

Figure 15. Magnetic Tape Read, 41.7 Kc, Read Amplifier Signals

V

LOGIC EQUATIONS
MAGNETIC TAPE CONTROL UNIT

Models: 9248, 92481, 92482

SDS 90 05 20B August 1965

SDS

SCIENTIFIC DATA SYSTEMS/1649 Seventeenth Street/Santa Monica, California/UP 1-0960

©1964, 1965 Scientific Data Systems, Inc.

Printed in U.S.A.

LOGIC EQUATIONS
SDS 9248, 92481, 92482 TAPE CONTROL UNIT
MAGNETIC TAPE SYSTEM

Control Commands

M start = Buc $\overline{C17}$ C20

M control = Ioc $\overline{C17}$ C20

Forward/Reverse Controls

sMf = M start Q2 $\overline{C12}$ $\overline{Mf}$ $\overline{Mr}$

rMf = (Mcr) dc

sMr = M start Q2 C12 $\overline{Mf}$ $\overline{Mr}$

rMr = (Mcr) dc

Data Mode Select

sMe = M start Q2 $\overline{C14}$ $\overline{Me}$

rMe = M start Q2 C14 Me + (Mcr) dc

Control Reset

Mcr = $\overline{D1}$ $\overline{D2}$ $\overline{Ds}$ Dt ($\overline{W9}$ W11 W0 + W9 W11) + $\overline{W11}$ $\overline{M\ start}$

Control Timers

sD1 = (M start Q2 $\overline{C12}$ $\overline{Mf}$ $\overline{Mr}$) dc + Ds $\overline{D2}$ + (Mr D2) dc

rD1 = 4.7 ms after sD1

sD2 = W0 $\overline{W9}$ W11 $\overline{Dt}$ Mtg (Mf + Mr) $\overline{Q2}$
+ $\overline{W0}$ W5 $\overline{W6}$ W9 W11 $\overline{Dt}$ Gap Mtg $\overline{M\ start}$ (Mf + Mr) $\overline{Q2}$

rD2 = 1.6 ms after sD2

sD3 = $\overline{D1}$ $\overline{D2}$ $\overline{Ds}$ Dt $\overline{D4}$ $\overline{Mf}$ $\overline{Mr}$ $\overline{Q2}$

rD3 = 25 ms after sD3

sD4 = (M start Q2 $\overline{Mf}$ $\overline{Mr}$) dc

rD4 = 14 ms after sD4

sD5 = $\overline{D2}$

rD5 = 350 μsec after sD5

sD6 = $\overline{D5}$

rD6 = 10 μsec after sD6

Control Flip-Flops

sDt = Q2 D5 $\overline{Dt}$

rDt = $\overline{Q2}$ D3 $\overline{Ds}$ Dt + $\overline{Q2}$ Ds W9 W11 + ($\overline{W11\ M\ start}$) dc
+ $\overline{W0}$ $\overline{W9}$ W11 $\overline{D1}$ $\overline{D2}$ $\overline{Ds}$ Dt $\overline{Q2}$

sDs = Q2 M start D2

rDs = $\overline{Q2}$ D1 Ds + ($\overline{W11}$ $\overline{M\ start}$) dc

Halt Signal

Whs = W11 $\overline{D1}$ $\overline{D2}$ $\overline{D3}$ $\overline{D4}$ $\overline{Dt}$ $\overline{Mf}$ $\overline{Mr}$

Halt Signal to W Buffer

$\overline{(Whs)}$ = $\overline{(Whs + Mr\ Bor)\ W11}$

Density Select

200 BPI = Da

556 BPI = Db

800 BPI = Dc

Clock Generator

Mcd = Mca if Da + Mcb if Db + Mcc if Dc

Mca = 15 Kc

Mcb = 41.7 Kc

Mcc = 60 Kc

Clock Signal

sMc = Mcd

rMc = 2 μsec after sMc

Clock to W Buffer

Ecm = W11 $\overline{D1}$ $\overline{D2}$ $\overline{D3}$ $\overline{Dt}$ $\overline{W5}$ $\overline{W6}$ Rcd $\overline{W0\ Rbi}$ (Mf + Mr)

First Character Bit Sense

Fb = $\overline{Rfb}$($\underline{Rpa}$ + $\underline{R6a}$ + $\underline{R5a}$ + $\underline{R4a}$ + $\underline{R3a}$ + $\underline{R2a}$ + $\underline{R1a}$)

First Character Bit Sense Lockout

sRfb = $\underline{Fb}$ $\overline{Rfb}$ (W11 $\overline{D1}$ $\overline{D2}$ $\overline{D3}$ $\overline{Dt}$ $\overline{Rbt}$ + D5)

rRfb = ($\underline{Cr}$ + $\underline{Cf\ W9\ W11}$) Rfb + ($\overline{W11}$ $\overline{M\ Start}$) dc

Character Detect Clock

Cf = Cfb $\overline{Whs}$ $\overline{D1}$ $\overline{M\ start}$

Cfb = Cfba + Cfbb + Cfbc

sCfba = $\overline{Rfb}$ Da + ($\overline{Da}$) dc

rCfba = 17 μsec after sCfba

sCfbb = $\underline{\overline{Rfb}}$ Db + $(\overline{Db})$ dc

rCfbb = 6 μsec after sCfbb

sCfbc = $\underline{\overline{Rfb}}$ Dc + $(\overline{Dc})$ dc

rCfbc = 4 μsec after sCfbc

Character Gate Write Skew

Cs = Cgs $\overline{Whs}$ $\overline{D1}$ $\overline{M\ start}$

Cgs = Cgsa + Cgsb + Cgsc

sCgsa = $\underline{Cf}$ W9 W11 Da + $(\overline{Da})$ dc

rCgsa = 34 μsec after sCgsa

sCgsb = $\underline{Cf}$ W9 W11 Db + $(\overline{Db})$ dc

rCgsb = 12 μsec after sCgsb

sCgsc = $\underline{Cf}$ W9 W11 Dc + $(\overline{Dc})$ dc

rCgsc = 8 μsec after sCgsc

Character Gate Read

Cr = Cgr $\overline{Whs}$ $\overline{D1}$ $\overline{M\ start}$

Cgr = Cgra + Cgrb + Cgrc

sCgra = $\underline{Cf}\,\overline{W9}$ W11 Da + $(\overline{W5}$ W6 Cr) dc + $(\overline{Da})$ dc

rCgra = 17 μsec after sCgra

sCgrb = $\underline{Cf}\,\overline{W9}$ W11 Db + $(\overline{W5}$ W6 Cr) dc + $(\overline{Db})$ dc

rCgrb = 6 μsec after sCgrb

sCgrc = $\underline{Cf}\,\overline{W9}$ W11 Dc + $(\overline{W5}$ W6 Cr) dc + $(\overline{Dc})$ dc

rCgrc = 4 μsec after sCgrc

Gap Sense

Gap = 150 μsec with no Cf if Da

+ 54 μsec with no Cf if Db

+ 37 μsec with no Cf if Dc

Gap Detect

sMtg = $\underline{(\overline{Gap}}$ + W9 W10 W11 R2b) $\overline{Ds}$ $\overline{Dt}$ $\overline{Mtg}$

rMtg = $\underline{Cf}$ (Mtg $\overline{W9}$ + $\overline{W10}$) + (Mcr) dc + $(\overline{M\ start})$ dc

(Mtg) = D2 $\overline{D5}$ Dt

Character Alternator

sRdm = $\underline{Cs}$ $\overline{Rdm}$ (W11 $\overline{D1}$ $\overline{D2}$ $\overline{D3}$ $\overline{Dt}$ $\overline{Rbt}$ + D5)

sRdm = $\underline{Cs}$ Rdm(W11 $\overline{D1}$ $\overline{D2}$ $\overline{D3}$ $\overline{Dt}$ $\overline{Rbt}$ + D5) + (Cri + M start) dc

Tape Mark Detect

sRtm = (M start) dc

rRtm = $\underline{\overline{W5}}$ Rcd Rtm $\overline{Rfm}$

where:

Rfm = $\overline{Rpb}$ $\overline{R1b}$ $\overline{R2b}$ R3b R4b R5b R6b

Clock Detect

sRcd = $\underline{(Cr}$ + W9W11 Mc) $(\overline{W9}$W11 $\overline{Rcd}$ + W9 W11 Rpb $\overline{Rcd})$

rRcd = $\underline{\overline{W5}\ W6\ Q2}$ $\overline{Rfd}$ Rcd + (M start + Rbi) dc

Registers Full Detect

sRfd = $\underline{(Cr}$ + W9 W11 Mc)$(\overline{W9}$ W11 Rcd + W9 W11 $\overline{Rfd}$ Rcd)

rRfd = $\underline{(\overline{W5}\,\overline{W9}\,W11\,Rcd + Mc\,Rfd\,W9\,W11)}$ Rfd + (M start + Rbi)dc

Transfer Read Flip-Flops to Buffer Register

Ri = $\overline{W9}$ W11 (Cr $\overline{Rcd}$ + $\overline{W5}$ Rcd Rfd) + W9 W11 Mc

+ W9 W11 $\overline{Rpb}$ Mr $\overline{Rfb}$ Rtm

Reset Read Flip-Flops

sCri = $\underline{Ri}$ $\overline{W9}$ W11

rCri = 0.5 μsec after sCri

Load Point Inhibit

sRbt = Bor $\underline{Mc}$ $\overline{Rbt}$

rRbt = $\overline{D4}$ Rbt $\underline{Mc}$ + (M start + Rbi) dc

Read Flip-Flops

sR6m=$\underline{R6a}$ $\overline{R6m}$ (W11 $\overline{D1}$ $\overline{D2}$ $\overline{D3}$ $\overline{Dt}$ $\overline{Rbt}$ + D5)

rR6m=$\underline{R6a}$ R6m (W11 $\overline{D1}$ $\overline{D2}$ $\overline{D3}$ $\overline{Dt}$ $\overline{Rbt}$ + D5) + (Cri + M start) dc

sR5m=$\underline{R5a}$ $\overline{R5m}$ (W11 $\overline{D1}$ $\overline{D2}$ $\overline{D3}$ $\overline{Dt}$ $\overline{Rbt}$ + D5)

rR5m=$\underline{R5a}$ R5m(W11 $\overline{D1}$ $\overline{D2}$ $\overline{D3}$ $\overline{Dt}$ $\overline{Rbt}$ + D5) + (Cri + M start) dc

sR4m=$\underline{R4a}$ $\overline{R4m}$ (W11 $\overline{D1}$ $\overline{D2}$ $\overline{D3}$ $\overline{Dt}$ $\overline{Rbt}$ + D5)

rR4m=$\underline{R4a}$ R4m (W11 $\overline{D1}$ $\overline{D2}$ $\overline{D3}$ $\overline{Dt}$ $\overline{Rbt}$ + D5) + (Cri + M start) dc

sR3m=$\underline{R3a}$ $\overline{R3m}$ (W11 $\overline{D1}$ $\overline{D2}$ $\overline{D3}$ $\overline{Dt}$ $\overline{Rbt}$ + D5)

rR3m=$\underline{R3a}$ R3m(W11 $\overline{D1}$ $\overline{D2}$ $\overline{D3}$ $\overline{Dt}$ $\overline{Rbt}$ + D5) + (Cri + M start) dc

sR2m=$\underline{R2a}$ $\overline{R2m}$ (W11 $\overline{D1}$ $\overline{D2}$ $\overline{D3}$ $\overline{Dt}$ $\overline{Rbt}$ + D5)

rR2m=$\underline{R2a}$ R2m(W11 $\overline{D1}$ $\overline{D2}$ $\overline{D3}$ $\overline{Dt}$ $\overline{Rbt}$ + D5) + (Cri + M start) dc

sR1m=$\underline{R1a}$ $\overline{R1m}$ (W11 $\overline{D1}$ $\overline{D2}$ $\overline{D3}$ $\overline{Dt}$ $\overline{Rbt}$ + D5)

rR1m=$\underline{R1a}$ R1m (W11 $\overline{D1}$ $\overline{D2}$ $\overline{D3}$ $\overline{Dt}$ $\overline{Rbt}$ + D5) + (Cri + M start) dc

sRpm=$\underline{Rpa}$ $\overline{Rpm}$ (W11 $\overline{D1}$ $\overline{D2}$ $\overline{D3}$ $\overline{Dt}$ $\overline{Rbt}$ + D5)

rRpm=Rpa Rpm (W11 $\overline{D1}$ $\overline{D2}$ $\overline{D3}$ $\overline{Dt}$ $\overline{Rbt}$ + D5) +(Cri + M start) dc

Write Flip-Flops

sM6=Mi ($\overline{W9}$ W11 R6m $\overline{M6}$ + W9 W11 R6)

rM6=Mi($\overline{W9}$ W11 R6m M6 + W9 W11 $\overline{R6}$) + (M start) dc

sM5=Mi ($\overline{W9}$ W11 R5m $\overline{M5}$ + W9 W11 R5w)

rM5=Mi ($\overline{W9}$ W11 R5m M5 + W9 W11 $\overline{R5w}$) +(M start) dc

sM4=Mi ($\overline{W9}$ W11 R4m $\overline{M4}$ + W9 W11 R4)

rM4=Mi ($\overline{W9}$ W11 R4m M4 + W9 W11 $\overline{R4}$) +(M start) dc

sM3=Mi ($\overline{W9}$ W11 R3m $\overline{M3}$ + W9 W11 R3w)

rM3=Mi ($\overline{W9}$ W11 R3m M3 + W9 W11 $\overline{R3w}$) +(M start) dc

sM2=Mi ($\overline{W9}$ W11 R2m $\overline{M2}$ + W9 W11 R2)

rM2=Mi ($\overline{W9}$ W11 R2m M2 + W9 W11 $\overline{R2}$) +(M start) dc

sM1=Mi($\overline{W9}$ W11 R1m $\overline{M1}$ + W9 W11 R1w)

rM1=Mi ($\overline{W9}$ W11 R1m M1 + W9 W11 $\overline{R1w}$) + (M start) dc

sMp=Mi ($\overline{W9}$ W11 Rpm $\overline{Mp}$ + W9 W11 Rpw)

rMp=Mi ($\overline{W9}$ W11 Rpm Mp + W9 W11 $\overline{Rpw}$) +(M start) dc

Write Data Clock

Mi = $\overline{W5}$ W6 W9 $\overline{W10}$ W11 Rcd Q2 + Cr

Write Deskew Clock Enable

Mw = W9 W11 Rpb

Mrs= R1b R2b

Write Toggle Erase

Mre = W9 W10 W11 + W9 W11 D1 + M start W11

Buffer Register

sR6b = Ri R6m

rR6b = Ri $\overline{R6m}$ R6b + (M start) dc

sR5b = Ri R5m

rR5b = Ri $\overline{R5m}$ R5b + (M start) dc

sR4b = Ri R4m

rR4b = Ri $\overline{R4m}$ R4b + (M start) dc

sR3b = Ri R3m

rR3b = Ri $\overline{R3m}$ R3b + (M start) dc

sR2b = Ri (R2m $\overline{W9}$ W11 + W9 W11 $\overline{W0}$ W5 $\overline{W6}$ $\overline{R2b}$ $\overline{Rpb}$)

rR2b = Ri ($\overline{R2m}$ $\overline{W9}$ W11 + W9 W11 R2b) + (M start) dc

sR1b = Ri (R1m $\overline{W9}$ W11 + W9 W11 R2b $\overline{R1b}$)

rR1b = Ri ($\overline{R1m}$ $\overline{W9}$ W11 R1b) + (M start) dc

sRpb=Ri(RpmW9W11+W9W11 $\overline{RpbD1D2D3DtDsW0W5W6W9W11}$)

rRpb=Ri $\overline{Rpm}$ $\overline{W9}$ W11 +(M start)dc + (Rcd $\overline{W0}$ W5 $\overline{W6}$ W9 W11)dc

Character Signals

R6w = W11 R6b

R5W =($\overline{W9}$ W11 $\overline{Me}$ R5b

+$\overline{W9}$ W11 Me R5b $\overline{Rpb\,R6b\,R5b\,R4b\,R3b\,R2b\,R1b}$

+W9 W11 R5 + Rp $\overline{R6}$ $\overline{R5}$ $\overline{R4}$ $\overline{R3}$ $\overline{R2}$ $\overline{R1}$ W9 W11 Me) W11

R4w = W11 R4b

R3w = (W9 W11 $\overline{Me}$ R3b

+ $\overline{W9}$ W11 Me R3b $\overline{Rpb\,R6b\,R5b\,R4b\,R3b\,R2b\,R1b}$

+ W9 W11 R3 + W9 W11 Me Rp $\overline{R6}$ $\overline{R5}$ $\overline{R4}$ $\overline{R3}$ $\overline{R2}$ $\overline{R1}$) W11

R2w = W11 R2b

R1w = ($\overline{W9}$ W11 $\overline{Me}$ R1b + $\overline{W9}$ W11 Me $\overline{R2b}$ R1b

+ $\overline{W9}$ W11 Me R2b $\overline{R1b}$ + W9 W11 $\overline{Me}$ R1

+ W9 W11 Me R1 $\overline{R2}$ + W9 W11 Me $\overline{R1}$ R2) W11

Rpw = ($\overline{W9}$ W11 $\overline{Me}$ Rpb + $\overline{W9}$ W11 Me $\overline{Rpb}$ $\overline{R2b}$

+ $\overline{W9}$ W11 Me Rpb R2b + W9 W11 $\overline{Me}$ Rp

+ W9 W11 Me Rp R2

+ W9 W11 Me $\overline{Rp}$ $\overline{R2}$) W11

Sio to Test

$\overline{Sio}$ = $\overline{Siot}$

+ $\overline{C12}$ C13 C14 C15 C16 Rtm

+ $\overline{C12}$ C13 $\overline{C14}$ C15 C16 (Mtg) $\overline{Rtm}$

+ $\overline{\overline{C17}\ C20}$

Characters to W Buffer

$\overline{Zw6}$ = $\overline{R6w}$

$\overline{Zw5}$ = $\overline{R5w}$

$\overline{Zw4}$ = $\overline{R4w}$

$\overline{Zw3} = \overline{R3w}$

$\overline{Zw2} = \overline{R2w}$

$\overline{Zw1} = \overline{R1w}$

$\overline{Zwp} = \overline{Rpw}$

Gap Interrupt Enable

sMgi = M control $\overline{C12}$ C13 $\overline{C14}$ C15 C16 $\overline{Mgi}$

rMgi = ($\overline{W11}$ $\overline{M\ start}$) dc

Gap Interrupt

Ig = Mgi D6 W11

W Buffer Clock Inhibit Detect

sRbi = M control $\overline{C12}$ C13 C14 C15 C16 $\overline{Rbi}$

rRbi = (M start) dc

Error Detector

sWes = ($\overline{W9}$ W11 Mpc D6)

+ (W9 W11 Rpc D6)

+ (W9 W11 $\overline{D1}$ $\overline{D2}$ $\overline{D3}$ $\overline{Dt}$ Me Zp Cs)

+ (W9 W11 $\overline{D1}$ $\overline{D2}$ $\overline{D3}$ $\overline{Dt}$ $\overline{Me}$ Zp Rdm Cs)

+ (W9 W11 $\overline{D1}$ $\overline{D2}$ $\overline{D3}$ $\overline{Dt}$ $\overline{Me}$ $\overline{Zp}$ $\overline{Rdm}$ Cs)

+ (Rfd Rcd Cf $\overline{W9}$ W11)

+ (Rfd Rpb W9 W11)

+ (Rse)

+ (W9 W11 Ae $\overline{D1}$)

rWes = 10 μsec after sWes

where:

$Zp = \overline{Yp}\ \overline{Rpm}\ R6m + \overline{Yp}\ Rpm\ \overline{R6m} + Yp\ \overline{Rpm}\ \overline{R6m} + Yp\ Rpm\ R6m$

$Yp = \overline{Xp}\ \overline{R5m}\ R4m + \overline{Xp}\ R5m\ \overline{R4m} + Xp\ \overline{R5m}\ \overline{R4m} + Xp\ R5m\ R4m$

$Xp = \overline{R3m}\ \overline{R2m}\ R1m + \overline{R3m}\ R2m\ \overline{R1m} + R3m\ \overline{R2m}\ \overline{R1m} + R3m\ R2m\ R1m$

Rpc = R1m + R2m + R3m + R4m + R5m + R6m + Rpm

Mpc = M1 + M2 + M3 + M4 + M5 + M6 + Mp

Skew Error Detect

sRse = Fb Cs

rRse = (M start + Rbi) dc + ($\overline{Cs}$) dc

LOGIC EQUATIONS
ELECTRONIC UNITS
MAGNETIC TAPE SYSTEMS

Models: 9246A, 92461A, 92462A,
9246P, 92461P, and 92462P

SDS 90 05 21B August 1965

SCIENTIFIC DATA SYSTEMS/1649 Seventeenth Street/Santa Monica, California/UP 1-0960

©1964, 1965 Scientific Data Systems, Inc.

Printed in U.S.A.

LOGIC EQUATIONS
ELECTRONIC UNITS, MAGNETIC TAPE SYSTEM
Models 9246A, 92461A, 92462A, 9246P, 92461P, and 92462P

Tape Unit Select

sMa = M start Q2 Ready (Unit Select) $\overline{Ma}$

rMa = (Whs + $\overline{\text{Ready}}$) dc

Tape Unit Addressed

Mad = Ma0 + Ma1 + Ma2 + Ma3 + Ma4 + Ma5 + Ma6 + Ma7

Pinch Roller Actuate

Forward Actuate = Ma Mf $\overline{Test}$

Reverse Actuate = Ma Mr $\overline{Test}$ + Mb $\overline{Test}$

Tape Unit Ready

Ready = $\overline{Ma}$ $\overline{Mb}$ $\overline{Dr}$ $\overline{\text{Ready}}$

Tape Transport Ready

$\overline{\text{Ready}}$ = K8 K1 $\overline{K9}$, (TM4) + Ready, (MT-120)

Unit Select

Unit Select = Kc21 Kc22 Kc23 $\overline{\text{Ready}}$

Write Activate

Write Activate = Ma W9 W11 $\overline{Test}$

K3 Set = $\overline{\text{File Protect}}$ ⟶ +25v Write

Rewind Control

sMb = M control C12 $\overline{C16}$ $\overline{Bor}$ Ready (Unit Select) $\overline{Mb}$

rMb = $\overline{Mca}$ Dr Mb + ($\overline{\text{Ready}}$ $\overline{Dr}$) dc

Manual Stop Control

K2 set = (Eor + Bor) $\overline{\text{Ready}}$

Rewind Speed Select

K1 set = Mb

Rewind Stop Delay

sDr = Mb Bor $\overline{Mca}$ + ($\overline{Bot}$ Bor Mr Ma) dc

rDr = 1.0 sec after sDr

Beginning and End of Tape Detect

sDebt = Mca Eot Eor Mf Ma

+ Mca Eot Eor (Ma Mr + Mb)

+ Dr

rDebt = 10 microseconds after sDebt

Beginning and End of Tape Flip-Flops

sEot = Debt Eor $\overline{Eot}$ + ($\overline{\text{Ready}}$ Eor) dc

rEot = Debt (Ma Mr Eot + Mb Eot)

+ ($\overline{\text{Ready}}$ $\overline{Ma}$ $\overline{Eor}$) dc

sBot = Debt Bor $\overline{Bot}$ + ($\overline{\text{Ready}}$ Bor) dc

rBot = ($\overline{Bor}$) dc

Beginning and End of Tape Interrupts

Ib = Debt Bor

Ie = Debt Eor Mf

Tests to Sio

$\overline{\text{Siot}}$ = C12 $\overline{C16}$ (Unit Select) (File Protect)

+ C13 $\overline{C16}$ (Unit Select) Bor

+ C14 $\overline{C16}$ (Unit Select) Eot

+ C15 $\overline{C16}$ (Unit Select) Ready

BPI

+ C12 C13 $\overline{C14}$ $\overline{C15}$ C16 (Unit Select) Kda

+ C12 C13 $\overline{C14}$ C15 C16 (Unit Select) Kdb

+ C12 C13 C14 $\overline{C15}$ C16 (Unit Select) Kdc

Density Select

200 bpi = Da = Kda Ma

555 bpi = Db = Kdb Ma

800 bpi = Dc = Kdc Ma

Threshold Level Control

Amplitude Sense ⟶ Tha

Detector

Write = W9 W11 ——►Thd

Detector

Read = $\overline{W9}$ W11 ——►Thd

Control Unit Write Signals

Write Deskew Clock Enable = Mw

Write Deskew Reset Enable = Mrs

Write Toggle Erase = Mre

Test Switch

Test = Switch S1 Set

$\overline{Test}$ = Switch S1 Normal

Write Deskew Timers

sM1s = (Mw M1 + Mrs M1t) Mc

rM1s = 2 to 8 microseconds after sM1s *

sM2s = (Mw M2 + Mrs M2t) Mc

rM2s = 2 to 8 microseconds after sM2s *

sM3s = (Mw M3 + Mrs M3t) Mc

rM3s = 2 to 8 microseconds after sM3s *

sM4s = (Mw M4 + Mrs M4t) Mc

rM4s = 2 to 8 microseconds after sM4s *

sM5s = (Mw M5 + Mrs M5t) Mc

rM5s = 2 to 8 microseconds after sM5s *

sM6s = (Mw M6 + Mrs M6t) Mc

rM6s = 2 to 8 microseconds after sM6s *

sMps = (Mw Mp + Mrs Mpt) Mc

rMps = 2 to 8 microseconds after sMps *

* (see calibration procedure)

Write Toggle Flip-Flops

sM1t = M1s $\overline{M1t}$

rM1t = M1s M1t + (Mre) dc

sM2t = M2s $\overline{M2t}$

rM2t = M2s M2t + (Mre) dc

sM3t = M3s $\overline{M3t}$

rM3t = M3s M3t + (Mre) dc

sM4t = M4s $\overline{M4t}$

rM4t = M4s M4t + (Mre) dc

sM5t = M5s $\overline{M5t}$

rM5t = M5s M5t + (Mre) dc

sM6t = M6s $\overline{M6t}$

rM6t = M6s M6t + (Mre) dc

sMpt = Mps $\overline{Mpt}$

rMpt = Mps Mpt + (Mre) dc

Read Deskew Timers Forward

sR1af = (R1a) + (Ma Mr + Ma Test) dc

rR1af = 2 to 8 microseconds after sR1af*

sR2af = (R2a) + (Ma Mr + Ma Test) dc

rR2af = 2 to 8 microseconds after sR2af *

sR3af = (R3a) + (Ma Mr + Ma Test) dc

rR3af = 2 to 8 microseconds after sR3af *

sR4af = (R4a) + (Ma Mr + Ma Test) dc

rR4af = 2 to 8 microseconds after sR4af *

sR5af = (R5a) + (Ma Mr + Ma Test) dc

rR5af = 2 to 8 microseconds after sR5af *

sR6af = (R6a) + (Ma Mr + Ma Test) dc

rR6af = 2 to 8 microseconds after sR6af *

sRpaf = (Rpa) + (Ma Mr + Ma Test) dc

rRpaf = 2 to 8 microseconds after sRpaf *

* (see calibration procedure)

Read Deskew Timers Reverse

sR1ar = (R1a) + (Ma Mf + Ma Test) dc

rR1ar = 2 to 8 microseconds after sR1ar *

sR2ar = (R2a) + (Ma Mf + Ma Test) dc

rR2ar = 2 to 8 microseconds after sR2ar *

sR3ar = (R3a) + (Ma Mf + Ma Test) dc

rR3ar = 2 to 8 microseconds after sR3ar *

sR4ar = (R4a) + (Ma Mf + Ma Test) dc

rR4ar = 2 to 8 microseconds after sR4ar *

sR5ar = (R5a) + (Ma Mf + Ma Test) dc

rR5ar = 2 to 8 microseconds after sR5ar *

sR6ar = (R6a) + (Ma Mf + Ma Test) dc

rR6ar = 2 to 8 microseconds after sR6ar *

sRpar = (Rpa) + (Ma Mf + Ma Test) dc

rRpar = 2 to 8 microseconds after sRpar *

* (see calibration procedure)

Test Signals

R6at = Ma Test M6s + Ma $\overline{\text{Test}}$

R5at = Ma Test M5s + Ma $\overline{\text{Test}}$

R4at = Ma Test M4s + Ma $\overline{\text{Test}}$

R3at = Ma Test M3s + Ma $\overline{\text{Test}}$

R2at = Ma Test M2s + Ma $\overline{\text{Test}}$

R1at = Ma Test M1s + Ma $\overline{\text{Test}}$

Rpat = Ma Test Mps + Ma $\overline{\text{Test}}$

Read Bus Signals

R1a = R1af + R1ar + R1at

R2a = R2af + R2ar + R2at

R3a = R3af + R3ar + R3at

R4a = R4af + R4ar + R4at

R5a = R5af + R5ar + R5at

R6a = R6af + R6ar + R6at

Rpa = Rpaf + Rpar + Rpat

Amplitude Error Sense

sAe = Aes Ma

rAe = 10 μsec after sAe

Amplitude Error Detect

Aes = Read Amplifier signal less than Tha

IV

INSTALLATION, MAINTENANCE and CALIBRATION PROCEDURES MAGNETIC TAPE SYSTEMS

Models: 9246A, 92461A, 92462A, 9248, 92481, and 92482

SDS 900519B August 1965

SDS

SCIENTIFIC DATA SYSTEMS/1649 Seventeenth Street/Santa Monica, California/UP 1-0960

© 1964, 1965. Scientific Data Systems, Inc.

Printed in U.S.A.

CONTENTS

Page

INSTALLATION, MAINTENANCE, AND CALIBRATION PROCEDURES 1

A. Servicing of Tape Transport Unit 1

B. Periodic System Testing 1

C. Cable Interconnections 1

C-1. Cable Plug Module, P42 1
C-2. Cable Plug Modules, P43 - P44 1
C-3. Cable Plug Modules, P40 - P41 1
C-4. Tape Transport Control Cable, P3 1
C-5. Read Head Cable, P1 1
C-6. Write Head Cable, P2 1

D. Termination Modules, ZK57 and ZK58 1

E. Power Circuits 1

E-1. Primary Power Connection 1
E-2. Power Distribution 1

F. Magnetic Tape System Adjustments and Calibration Procedures 1

F-1. Oscillator, 15 Kc, Mca 2
F-2. Oscillator, 41.7 Kc, Mcb 2
F-3. Oscillator, 60 Kc, Mcc 2
F-4. Threshold Adjustment, Amplitude Sense, Tha 2
F-5. Threshold Adjustment, Peak Detector, Thd 2
F-6. Gap Detector, Gap 2
F-7. Clock Signal, Mc 2
F-8. First Character Bit Detect, Cfba 3
F-9. First Character Bit Detect, Cfbb 3
F-10. First Character Bit Detect, Cfbc 3
F-11. Character Gate Write Skew, Cgsa 3
F-12. Character Gate Write Skew, Cgsb 3
F-13. Character Gate Write Skew, Cgsc 3
F-14. Error Detector, Wes 3
F-15. Photo-Sense, (Bor) and (Eor) 3
F-16. Rewind Stop Delay, Dr 4
F-17. Beginning and End of Tape Detect, Debt 4
F-18. Control Timer, D1 4
F-19. Control Timer, D2 4
F-20. Control Timer, D3 4
F-21. Control Timer, D4 4
F-22. Control Timer, D5 5
F-23. Control Timer, D6 5
F-24. Read Amplifier Gain Adjustment 5
F-25. Amplitude Sense Error Detect, Ae 5
F-26. Character Gate Read, Cgra 5
F-27. Character Gate Read, Cgrb 5
F-28. Character Gate Read, Cgrc 5
F-29. Reset Read Flip-Flops, Cri 5
F-30. Read Deskew Timers Forward, R6af through Rpcf 5
F-31. Read Deskew Timers Reverse, R6ar through Rpar 6
F-32. Write Deskew Timers, M6s through Mps 6

INSTALLATION, MAINTENANCE, AND CALIBRATION PROCEDURES
MAGNETIC TAPE SYSTEMS
Models 9246A, 92461A, 92462A, 9248, 92481 and 92482

A. SERVICING OF TAPE TRANSPORT UNIT

Adjustments, troubleshooting, and maintenance techniques pertaining to the magnetic tape transport are presented in detail in the Ampex TM-4 Technical Manual which is supplied with each SDS Magnetic Tape System. Refer to the TM-4 manual for servicing requirements and adjustment procedures of the tape transport.

B. PERIODIC SYSTEM TESTING

At regular maintenance intervals, the 42 Kc Magnetic Tape System Exerciser, SDS Catalog No. 074003, should be performed to determine the operational status of the Magnetic Tape System.

C. CABLE INTERCONNECTIONS

Cable assemblies supplied with the magnetic tape system provide interconnection (1) between units within the system cabinet, (2) to source power, (3) for input/output with the computer, and (4) between magnetic tape systems when more than one tape system is used with a computer installation.

Cable plug modules are connected as described in steps C-1 through C-6 for the particular type of system installation being used. Refer to Installation Drawing 103476 in Part V of this manual for physical location of cables and connectors.

C-1. CABLE PLUG MODULE, P42

This module always remains inserted into location 1S of the tape electronics chassis (S).

C-2. CABLE PLUG MODULES, P43 - P44

One P43 - P44 cable is always used between the Tape Control Unit Chassis (V) and the Tape Electronics Unit Chassis (S) respectively; P43 is inserted into location 24V of the V chassis, and P44 is inserted into location 3S of the S chassis. If an additional 9246A, 92461A, or 92462A unit is used from the same control unit, another P43 - P44 is used with P43 inserted into location 2S of chassis S of the first unit, and P44 is inserted into location 3S of chassis S of the second unit. This procedure is followed for all additional units.

C-3. CABLE PLUG MODULES, P40 - P41

Cable plug module P41 is always inserted into location 25V of chassis V and P40 into location 11G of the SDS 910 or 920 Computer, or into 38X of the Y Buffer.

C-4. TAPE TRANSPORT CONTROL CABLE, P3

This is the MS-type connector from the Auxiliary Control Panel. It is inserted in location J3 of the Ampex Power Supply chassis.

C-5. READ HEAD CABLE, P1

Connector P1 of the read head cable from the tape unit head box is inserted into location J1 on the S chassis.

C-6. WRITE HEAD CABLE, P2

Connector P2 of the write head cable from the head box is inserted into location J2 on the S chassis.

D. TERMINATION MODULES, ZK57 and ZK58

One ZK57 Termination Module is inserted into location 2S of the S chassis on the 9246A, 92461A, or 92462A Electronics Unit. One ZK58 Termination Module is inserted into location 4S of the S chassis on the 9246, 92461A, or 92462A Electronics Unit which is closest to the 9248, 92481, or 92482 Control Unit. For systems using only one tape unit, these modules will plug into the same 9246A, 92461A, or 92462A Electronics Unit. Drawings and material lists for the ZK57 and ZK58 modules are included in Part V of this manual.

E. POWER CIRCUITS

E-1. PRIMARY POWER CONNECTION

External connection to the 117-volt, 60-cycle primary power source is made at the bottom rear of the cabinet. The primary power source shall be capable of handling a load of 20 amperes for each tape unit connected.

E-2. POWER DISTRIBUTION

The Power Distribution Panel (lower front panel in cabinet) permits flexible control of primary power application to the magnetic tape system. Primary power is routed from the cabinet ac receptacle to a 30-ampere circuit breaker (see Power Distribution Schematic 102334 in Part V. If the tape system is operated independent of computer operation, apply power by switching the circuit breaker and ON-REMOTE switches to ON. Application of power to the magnetic tape system may be controlled at the computer, however, by plugging the tape unit remote ac power cord into the computer ac plugmold, and setting the ON-REMOTE switch to the REMOTE position. The magnetic tape system then becomes energized simultaneously with power application to the computer.

Power application for more than one magnetic tape unit is controlled by the computer power circuits by connecting the remote ac power cord of each magnetic tape unit to J1 of the preceding tape unit Power Distribution Panel. With the ON-REMOTE switches of all units set to REMOTE, power will be applied to all systems when computer power is turned on.

F. MAGNETIC TAPE SYSTEM ADJUSTMENTS AND CALIBRATION PROCEDURES

Outlined below are the procedures for performing all adjustments for the SDS portion of the Model 9246A, 92461A, or 92462A, and 9248, 92481, 92482 with 9121 Buffer Interface Magnetic Tape System. Refer to Part V for connector and pin locations. Schematics and reference data for module cards are contained on module data sheets in the 900 Series Computer Reference Drawings Manual, SDS 900029B, and in the 910/920 Maintenance Manuals, SDS 900048A and SDS 900049A.

F-1. OSCILLATOR, 15 Kc, Mca

a) Observe $\overline{\text{Mca}}$ at 5V14.

b) Adjust the tuning coil on the CK52 module located in 5V for a 67-microsecond signal period.

F-2. OSCILLATOR, 41.7 Kc, Mcb

a) Observe Mcb at 3V3.

b) Mcb is crystal controlled and no adjustment is required.

F-3. OSCILLATOR, 60 Kc, Mcc

a) Observe Mcc at 1V3.

b) Mcc is crystal controlled and no adjustment is required.

F-4. THRESHOLD ADJUSTMENT, AMPLITUDE SENSE, Tha

This adjustment is to be performed on each 9246A, 92461A, or 92462A Electronics Unit.

a) Observe Tha at 19Q12.

b) Adjust the top potentiometer on 19Q for a +3.5-volt level.

F-5. THRESHOLD ADJUSTMENT, PEAK DETECTOR, Thd

These adjustments are to be performed for each 9246A, 92461A, or 92462A Electronics Unit.

a) Observe Thd at 20Q12.

b) Set AUTOMATIC-MANUAL switch (on Manual Control Panel) to MANUAL.

c) At computer console, execute a Magnetic Tape Read (i.e., EOM00010).

d) Adjust the top potentiometer on 21Q for a +~~0.5~~ volt 2.5 V level.

e) At computer console, execute a Magnetic Tape Write (i.e., EOM00050).

f) Adjust the top potentiometer on 20Q for a +~~0.5~~ volt 4 or 5 V level.

F-6. GAP DETECTOR, Gap

a) Operate magnetic tape unit in MANUAL mode.

b) Remove BC10 module located at 8V.

c) Clip lead Cf at 8V6 to M start Q2 at 15V35.

d) Sync the scope positive on M start Q2 at 15V35.

e) Program the computer to execute the following commands:

Location	Instruction	Note
100	0 00 00000	HLT
101	0 71 00106	LDX
102	0 41 00104	BRX
103	0 01 00102	BRU
104	0 02 00010	EOM
105	0 01 00101	BRU
106	0 00 37400	(CONSTANT)

M start Q2 should occur approximately every 7 milliseconds.

f) Observe Gap at 7V14.

g) Ground ($\overline{\text{Da}}$) at 14V29 thereby making Da true and enabling Gap Detector for 200 bpi.

h) Adjust top potentiometer on 7V such that Gap becomes true 150 microseconds after the rise of M start Q2.

i) Remove ground from 14V29, and ground ($\overline{\text{Db}}$) at 14V16 thereby making Db true and enabling Gap Detector for 556 bpi.

j) Adjust middle potentiometer on 7V such that Gap becomes true 54 microseconds after the rise of M start Q2.

k) Remove ground from 14V16 and ground ($\overline{\text{Dc}}$) at 14V10 thereby making Dc true and enabling Gap Detector for 800 bpi.

l) Adjust bottom potentiometer on 7V such that Gap becomes true 37 microseconds after the rise of M start Q2.

m) Remove all clip leads and replace BC10 module in location 8V.

F-7. CLOCK SIGNAL, Mc

a) On the Auxiliary Control Panel, rotate UNIT SELECT switch to 0.

b) On the Auxiliary Control Panel, rotate DENSITY SELECT switch to 200.

c) Using MANUAL control, position the tape off the Load-Point marker.

d) On the Manual Control Panel, set AUTOMATIC-MANUAL switch to AUTOMATIC.

e) On the 9246A, 92461A, or 92462A Electronics Unit, row S, position the T-O (Test-Operate) switch to T.

f) Load the 42 Kc Magnetic Tape Test Program, SDS Catalog No. 074001, into the computer.

g) Perform the procedure for setting up the program for a continuous write. For example:

1Z
0U
100L
77777777P
B.P. 3 set
B.P. 4 set
W

This sequence of instructions will cause a continuous block of data to be recorded. The tape will not move because of the T (Test) mode selected in step (e). At the completion of any adjustment/s, the T-O switch should be returned to O position.

h) Observe Mc at 9K15.

i) Adjust potentiometer R10-2 on 9K for a signal duration of 2.0 microseconds.

F-8. FIRST CHARACTER BIT DETECT, Cfba

a) Perform the procedure outlined in paragraph F-7, steps (a) through (g).

b) Observe Cfba at 6V5.

c) Adjust potentiometer R10-3 on 6V for a signal duration of 17 microseconds.

F-9. FIRST CHARACTER BIT DETECT, Cfbb

a) Perform the procedure outlined in paragraph F-7, steps (a) through (g).

b) On the Auxiliary Control Panel, rotate DENSITY SELECT switch to 556.

c) Observe Cfbb at 4V5.

d) Adjust potentiometer R10-3 on 4V for a signal duration of 6 microseconds.

F-10. FIRST CHARACTER BIT DETECT, Cfbc

a) This adjustment is applicable only to systems using the 800-bpi recording density.

b) Perform the procedure outlined in paragraph F-7, steps (a) through (g).

c) On the Auxiliary Control Panel, rotate DENSITY SELECT switch to 800.

d) Observe Cfbc at 2V5.

e) Adjust potentiometer R10-3 on 2V for a signal duration of 4 microseconds.

F-11. CHARACTER GATE WRITE SKEW, Cgsa

a) Perform the procedure outlined in paragraph F-7, steps (a) through (g).

b) Observe Cgsa at 6V15.

c) Adjust potentiometer R10-2 on 6V for a signal duration of 34 microseconds.

F-12. CHARACTER GATE WRITE SKEW, Cgsb

a) Perform the procedure outlined in paragraph F-7, steps (a) through (g).

b) On the Auxiliary Control Panel, rotate DENSITY SELECT switch to 556.

c) Observe Cgsb 4V15.

d) Adjust potentiometer R10-2 on 4V for a signal duration of 12 microseconds.

F-13. CHARACTER GATE WRITE SKEW, Cgsc

a) This adjustment is required only for systems using 800-bpi recording density.

b) Perform the procedure outlined in paragraph F-7, steps (a) through (g).

c) On the Auxiliary Control Panel, rotate DENSITY SELECT switch to 800.

d) Observe Cgsc at 2V15.

e) Adjust potentiometer R10-2 on 2V for a signal duration of 8 microseconds.

F-14. ERROR DETECTOR, Wes

a) Perform the procedure outlined in paragraph F-7, steps (a) through (g).

b) On the Auxiliary Control Panel, rotate DENSITY SELECT switch to 556.

c) Ground Rpm at 13K28.

d) Observe Wes at 9K5.

e) Adjust potentiometer R10-3 on 9K for a signal duration of 10 microseconds.

f) Remove ground from 13K28.

F-15. PHOTO-SENSE, (Bor) and (Eor)

These adjustments are to be performed on each 9246A, 92461A, or 92462A Electronics Unit.

a) On the Manual Control Panel, position AUTOMATIC-MANUAL switch to MANUAL.

b) Thread a tape onto the transport containing reflective markers at each end of the tape (Part II). To facilitate the adjustments, Load-Point and End-of-Reel reflective strips may be added to the tape a few feet apart from each other.

c) Position the tape on the transport so that neither reflective marker is under the Photo-sense Assembly.

d) On the Photo-sense Amplifiers HX20-0 at location 5S, set potentiometers R11-1 and R11-2 (recessed on the module) at their mid-range position (approximately 12 turns from either end of the adjustment range).

e) Observe (Bor) at 5S20 with an oscilloscope. Turn potentiometer R4-2 in a counterclockwise direction until the observed dc level just begins to rise from its nominal level (-1 volt) toward some positive level. At this point, back the potentiometer off in a clockwise direction for one full turn. If, in turning the potentiometer to its extreme counterclockwise end, the dc level does not begin to rise, then back the potentiometer off seven full turns from the counterclockwise limit.

f) Move the tape such as to position the Load-Point marker strip under the photo-sense head. The observed dc level should rise to a nominal +9 volts.

g) Observe pin 5S24 and repeat steps (e) and (f) for (Eor) using potentiometer R4-1 and the End-of-Reel marker strip.

h) Remove any extra marker strips added to facilitate the above adjustments.

F-16. REWIND STOP DELAY, Dr

This adjustment is to be performed on each 9246A, 92461A, or 92462A Electronics Unit.

a) On the Manual Control Panel, position AUTOMATIC-MANUAL switch to MANUAL.

b) Load the 42 Kc Magnetic Tape Test Program, SDS Catalog No. 074001 into the computer.

c) Observe Dr at 3Q5.

d) Using the 42 Kc Magnetic Tape Test Program, cause the tape to rewind to Load-Point.

e) Adjust potentiometer R10-3 on 3Q for a Dr signal duration of 1.0 second.

f) Position the tape forward and repeat steps (d) and (e) as many times as necessary to obtain the proper setting.

F-17. BEGINNING AND END OF TAPE DETECT, Debt

This adjustment is to be performed on each 9246A, 92461A, or 92462A Electronics Unit.

a) Observe Debt at 3Q15.

b) Perform paragraph F-16, steps (d) and (f).

c) Adjust the middle potentiometer on 3Q for a Debt signal duration of 10 microseconds.

F-18. CONTROL TIMER, D1

a) On the Auxiliary Control Panel, rotate UNIT SELECT switch to 0.

b) On the Auxiliary Control Panel, rotate DENSITY SELECT switch to 200.

c) Using MANUAL control, position the tape off the Load-Point marker.

d) On the Manual Control Panel, set AUTOMATIC-MANUAL switch to AUTOMATIC.

e) On the 9246A, 92461A, or 92462A Electronics Unit, row S, position the T-O switch to T.

f) Load the 42 Kc Magnetic Tape Test Program, SDS Catalog No. 074001, into the computer.

g) Perform the procedure for setting up the program for writing blocks, stopping after each record. For example:

```
1Z
0U
100L
77777777P
B.P. 2 set
B.P. 4 set
W
```

This sequence of instructions will cause a continuous block of data to be recorded. The tape will not move because of the T (Test) mode selected in step (e). At the completion of any adjustments, the T-O switch should be returned to O.

h) Observe D1 at 2K5.

i) Adjust potentiometer R10-3 on 2K for a signal duration of 4.7 milliseconds.

F-19. CONTROL TIMER, D2

a) Repeat paragraph F-18, steps (a) through (g).

b) Observe D2 at 3K15.

c) Adjust potentiometer R10-2 on 3K for a signal duration of 1.6 milliseconds.

F-20. CONTROL TIMER, D3

a) Repeat paragraph F-18, steps (a) through (g).

b) Observe D3 at 3K39.

c) Adjust potentiometer R10-1 on 3K for a signal duration of [illegible] milliseconds. 20 MS

F-21. CONTROL TIMER, D4

a) Repeat paragraph F-18, steps (a) through (g).

b) Observe D4 at 3K5.

c) Adjust potentiometer R10-3 on 3K for a signal duration of 14 milliseconds.

F-22. CONTROL TIMER, D5

a) Repeat paragraph F-18, steps (a) through (g).

b) Observe D5 at 2K15.

c) Adjust potentiometer R10-2 on 2K for a signal duration of 350 microseconds.

F-23. CONTROL TIMER, D6

a) Repeat paragraph F-18, steps (a) through (g).

b) Observe D6 at 2K39.

c) Adjust potentiometer R10-1 on 2K for a signal duration of 10 microseconds.

F-24. READ AMPLIFIER GAIN ADJUSTMENT

a) On the Auxiliary Control Panel, rotate UNIT SELECT switch to 0.

b) On the Auxiliary Control Panel, rotate DENSITY SELECT switch to 556.

c) On the Manual Control Panel, position AUTOMATIC-MANUAL switch to AUTOMATIC.

d) Load the 42Kc Magnetic Tape Test Program, SDS Catalog No. 074001, into the computer.

e) Perform the procedure for setting up the program for a continuous write. For example:

```
1Z
0U
100L
77777777P
B.P. 3 set
B.P. 4 set
W
```

f) Monitor each of the Read Amplifier test points (TP1) on 19Q26 through 25Q26.

g) Adjust the gain of each Read Amplifier, bottom potentiometer on 19Q through 25Q, for a 20-volt peak-to-peak signal at TP1.

F-25. AMPLITUDE SENSE ERROR DETECT, Ae

a) Repeat paragraph F-24, steps (a) through (e).

b) Monitor Tha at 19Q12 and adjust the top potentiometer on 19Q for a +8-volt level from its nominal +3.5-volt level.

c) Monitor Ae at 18Q5.

d) Adjust potentiometer R10-3 on 18Q for a signal duration of 10 microseconds.

e) Monitor Tha at 19Q12 and adjust the top potentiometer on 19Q to restore Tha to its nominal +3.5-volt level.

F-26. CHARACTER GATE READ, Cgra

a) Perform paragraph F-24 steps (a) through (e) from the Load-Point, and record several hundred feet of tape. with density of 200.

b) Rewind the tape to Load-Point.

c) Read the recorded tape and monitor Cgra at 6V39.

d) Adjust potentiometer R10-1 on 6V for a signal duration of 17 microseconds.

F-27. CHARACTER GATE READ, Cgrb

a) Position DENSITY SELECT switch to 556, and perform paragraph F-26, steps (a) and (b).

b) Read the recorded tape and monitor Cgrb at 4V39.

c) Adjust potentiometer R10-1 on 4V for a signal duration of 6 microseconds.

F-28. CHARACTER GATE READ, Cgrc

This adjustment is required only for systems using 800-bpi recording density.

a) Position DENSITY SELECT switch to 800, and perform paragraph F-26, steps (a) and (b).

b) Read the recorded tape and monitor Cgrc at 2V39.

c) Adjust potentiometer R10-1 on 2V for a signal duration of 4 microseconds.

F-29. RESET READ FLIP-FLOPS, Cri

a) Perform paragraph F-26, steps (a) and (b).

b) Read the recorded tape and monitor Cri at 9K39.

c) Adjust potentiometer R10-1 on 9K for a signal duration of 0.5 microsecond.

F-30. READ DESKEW TIMERS FORWARD, R6af through Rpcf

a) On the Auxiliary Control Panel, rotate UNIT SELECT switch to 0.

b) On the Auxiliary Control Panel, rotate DENSITY SELECT switch to 556.

c) Load and thread the Master Alignment Tape onto the tape transport.

CAUTION

Make certain that the File Protect Ring is not on the reel. Upon completion of the procedures described in paragraph F-30 and/or paragraph F-31, the tape should be removed from the transport.

d) On the Manual Control Panel, position AUTOMATIC-MANUAL switch to AUTOMATIC.

e) Load the 42 Kc Magnetic Tape Test Program, SDS Catalog No. 074001 into the computer.

f) Perform the program procedure to designate a read forward, for example:

1Z
ØU
B.P. 4 set
R

g) While the tape is moving in the forward direction, monitor (R6a) through (Rpa) at 25Q14 through 19Q14 respectively, to determine which signal falls the latest. This entails synchronizing the oscilloscope on one channel, e.g., 25Q14, and observing it and all others until it is ascertained which channel falls the latest with respect to the others. Note this channel. If several channels appear to fall at approximately the same time, only one need be selected and noted. A nominal amount of jitter in these signals may be observed.

h) From the channel noted in step (g), ascertain which Read Deskew Timer Forward (R6af through Rpaf) corresponds with it. For example, if step (g) indicated that (R4a) 23Q14 fell the latest, then R4af, 17Q39 is the corresponding Read Deskew Timer Forward. Monitor and sync on this channel, e.g., 17Q39. Adjust the potentiometer corresponding to this channel for a signal duration of 3 microseconds.

i) While synchronizing the scope on, and observing the channel arrived at in step (h), observe and adjust all other Read Deskew Timers Forward such that all signals fall coincident in time. A nominal amount of jitter in these signals may be observed.

F-31. READ DESKEW TIMERS REVERSE, R6ar through Rpar

a) Perform paragraph F-30, steps (a) through (f), except in step (f) position the tape at the End-of-Reel and perform a backspace function by striking the B key on the typewriter.

b) Perform paragraph F-30, step (g).

c) From the channel noted in step (b), ascertain which Read Deskew Timer Reverse, R6ar through Rpar corresponds with it. For example, if step (b) indicated that (Rpa) , 19Q14, fell the latest, then Rpar, 18Q39, is the corresponding Read Deskew Timer Reverse. Monitor and synchronize the scope on this channel (e.g., 18Q39). Adjust the potentiometer corresponding to this channel for a signal duration of 3 microseconds.

d) While observing and synchronizing the scope on the channel ascertained in step (c), observe and adjust all other Read Deskew Timers Reverse such that all signals fall coincident in time. A nominal amount of jitter in these signals may be observed.

F-32. WRITE DESKEW TIMERS, M6s through Mps

a) Turn all potentiometers associated with the Write Deskew Timers to their minimum counterclockwise setting.

b) Perform paragraph F-24, steps (a) through (e).

c) Observe the Read Deskew Timers Forward, R6af through Rpaf, to determine which signal falls the latest. This entails synchronizing the oscilloscope on one channel (e.g., Rpaf, 18Q15), and observing it and all others until it is ascertained which channel falls the latest with respect to the others. Note this channel. If several channels appear to fall at approximately the same time, only one need be selected and noted. A nominal amount of jitter in these signals may be observed.

d) Determine the Write Deskew Timer that corresponds to the Read Deskew Timer Forward noted in step (c). For example, if R3af fell the latest in step (c), then the corresponding Write Deskew Timer is M3s, 15S39. Observe the corresponding Write Deskew Timer, and adjust its associated potentiometer for a signal duration of 3 microseconds.

e) Synchronize the scope on, and observe, the Read Deskew Timer Forward noted in step (c). Observe each of the remaining Read Deskew Timers Forward, and adjust the potentiometer on the associated Write Deskew Timer such that the Read Deskew Timer Forward signals all fall coincident with the one the scope is synchronized on. Adjustment of the Write Deskew Timers affects the positioning of the Read Deskew Timer Forward signals and not their period. A nominal amount of jitter in these signals may be observed.

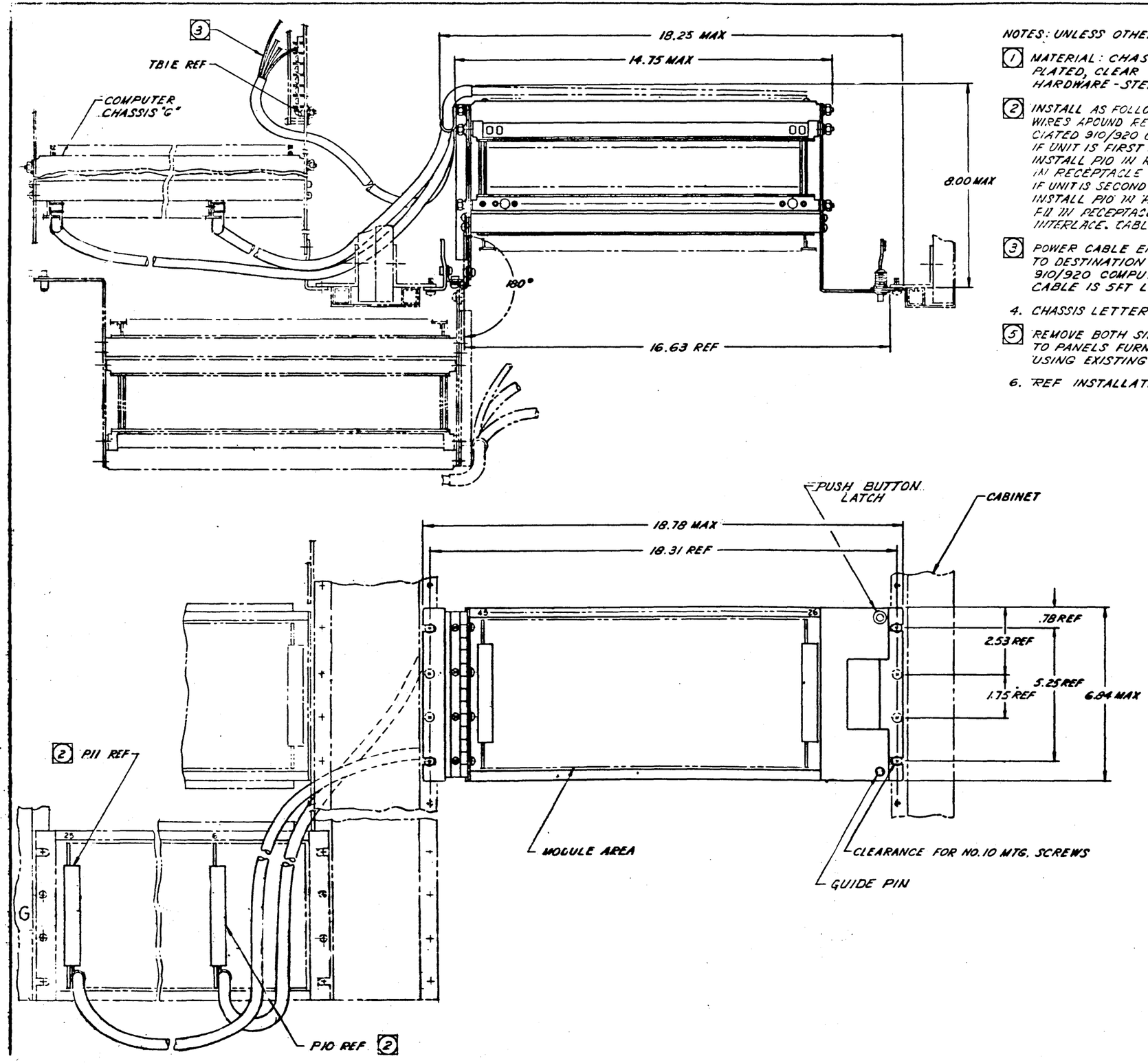

NOTES: UNLESS OTHERWISE SPECIFIED

1. MATERIAL: CHASSIS - STEEL, CAD PLATED, CLEAR CHROMATE DIPPED. HARDWARE - STEEL, CAD PLATED.
2. INSTALL AS FOLLOWS (AFTER REMOVING WIRES AROUND RECEPTACLE J(25G) IN ASSOCIATED 910/920 COMPUTER): IF UNIT IS FIRST INTERLACE USED - INSTALL P10 IN RECEPTACLE J(6G) & P11 IN RECEPTACLE J(25G) OF COMPUTER IF UNIT IS SECOND INTERLACE USED - INSTALL P10 IN RECEPTACLE J(45L) & P11 IN RECEPTACLE J(44L) OF FIRST INTERLACE. CABLES ARE 4 FT LONG
3. POWER CABLE ENDS ARE TAGGED AS TO DESTINATION IN ASSOCIATED 910/920 COMPUTER; CABLE IS 5FT LONG.
4. CHASSIS LETTER DESIGNATION IS "L"
5. REMOVE BOTH SIDE PANELS & MOUNT TO PANELS FURNISHED WITH COMPUTER, USING EXISTING HARDWARE.
6. REF INSTALLATION PROCEDURE 101955.

REVISIONS				102219	3
REV	DESCRIPTION	CHK	DATE	APPROVED	
A	RELEASED TO MFG.				
B	SEE REVISION EO.				

INSTALLATION IN CABINET

NO. REQ	DRAWING NO.	DESCRIPTION	REFERENCE DESIGNATION	ITEM NO.

MATERIAL LIST

NOTES UNLESS SPECIFIED
1. TOLERANCES .XX ± .030 .XXX ± .010 ANGULAR ± ½°
2. BREAK ALL SHARP EDGES .010 APPROX
3. MACH. SURFACES ✓
4. ALL DIM. IN INCHES

DRAWN	[signature]	1/22/63
CHECK	[signature]	1/25/63
APPR.	[signature]	2/21/63

SDS SCIENTIFIC DATA SYSTEMS
1542 FIFTEENTH STREET, SANTA MONICA, CALIFORNIA

TITLE: INSTALLATION DWG, INTERLACE

MODEL NO. 9121
NEXT ASSY 101688
SIZE D
DWG NO. 102219 B
SCALE 1/2 S
DO NOT SCALE DRAWING
SHEET 1 OF 2

102219 B

REVISIONS			102219	B
REV	DESCRIPTION	CHK	DATE	APPROVED
	SEE SHT. 1			

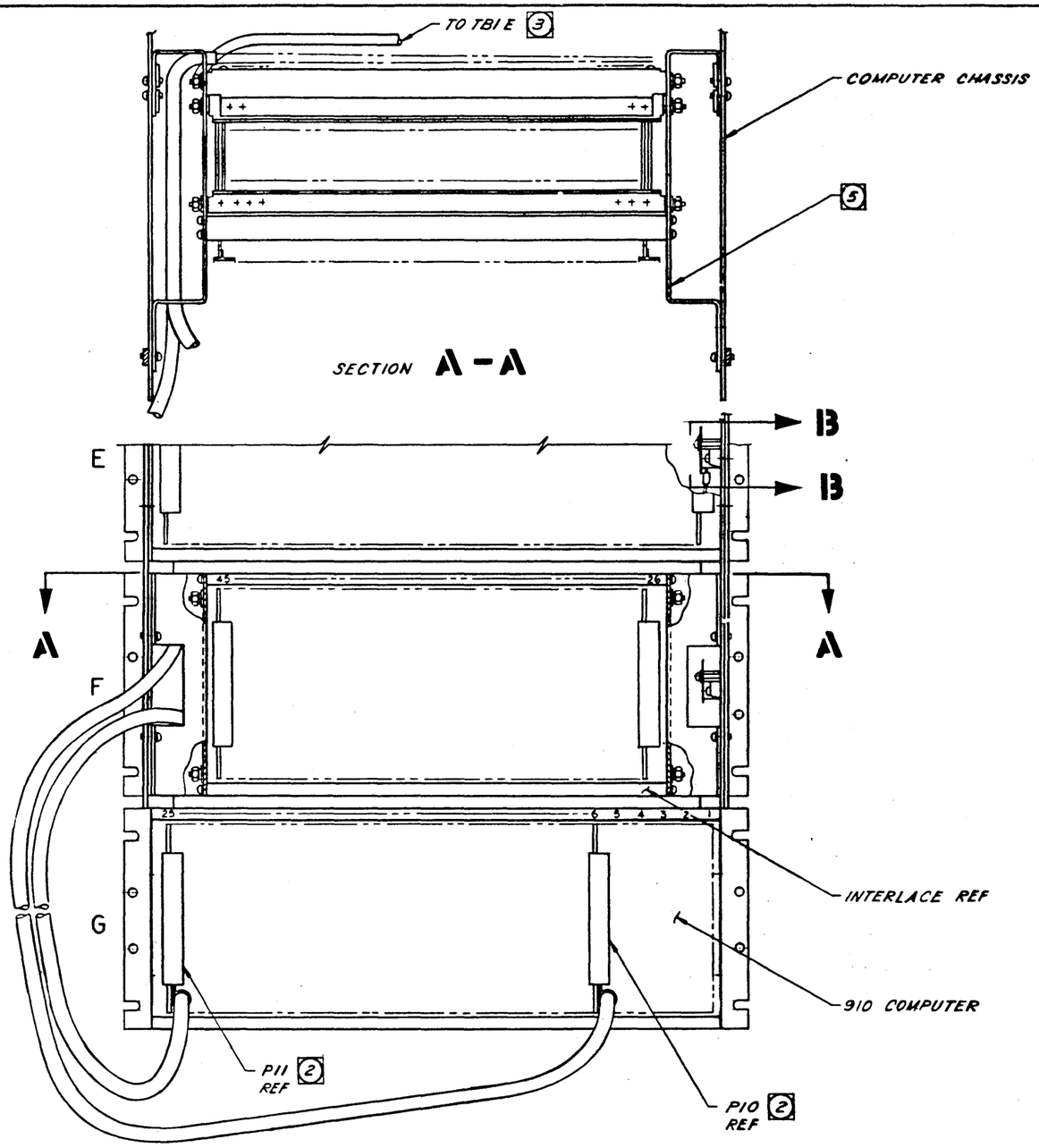

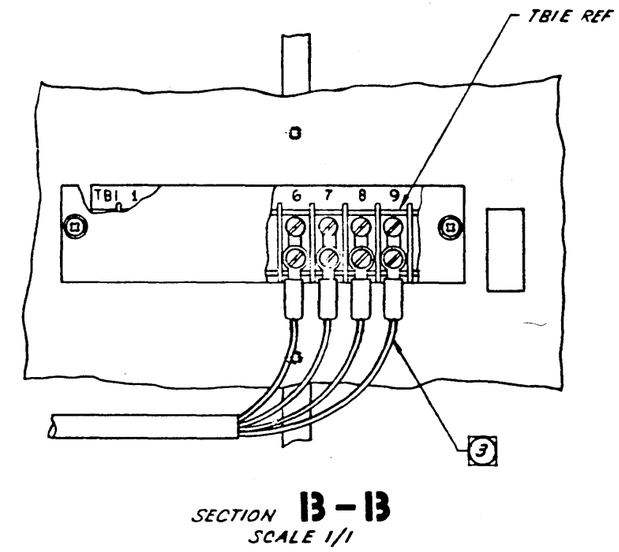

ALTERNATE INSTALLATION IN CHASSIS "F" OF 910 COMPUTER.

NO. REQ	DRAWING NO	DESCRIPTION	REFERENCE DESIGNATION	ITEM NO.

MATERIAL LIST

NOTES UNLESS SPECIFIED

1. TOLERANCES .XX ± .030 .XXX ± .010 ANGULAR ± 1/2°
2. BREAK ALL SHARP EDGES .010 APPROX
3. MACH. SURFACES √
4. ALL DIM. IN INCHES

DRAWN	[signature]	2-4-63
CHECK	[signature]	5/23/63
APPR	[signature]	2/21/63

SDS SCIENTIFIC DATA SYSTEMS
1642 FIFTEENTH STREET SANTA MONICA CALIFORNIA

TITLE: INSTALLATION DWG, INTERLACE

MODEL NO. 9121

NEXT ASSY. 101683

SIZE D | DWG NO. 102219 | B

SCALE 1/1 | DO NOT SCALE DRAWING | SHEET 2 OF 2

102219 B

REVISIONS				103476	B
REV.	DESCRIPTION	CHK	DATE	APPROVED	
A	RELEASED TO MFG.	CJP	1/15/63	[illegible]	
B	SEE REVISION E.O.	[illegible]	8/63	WKF	

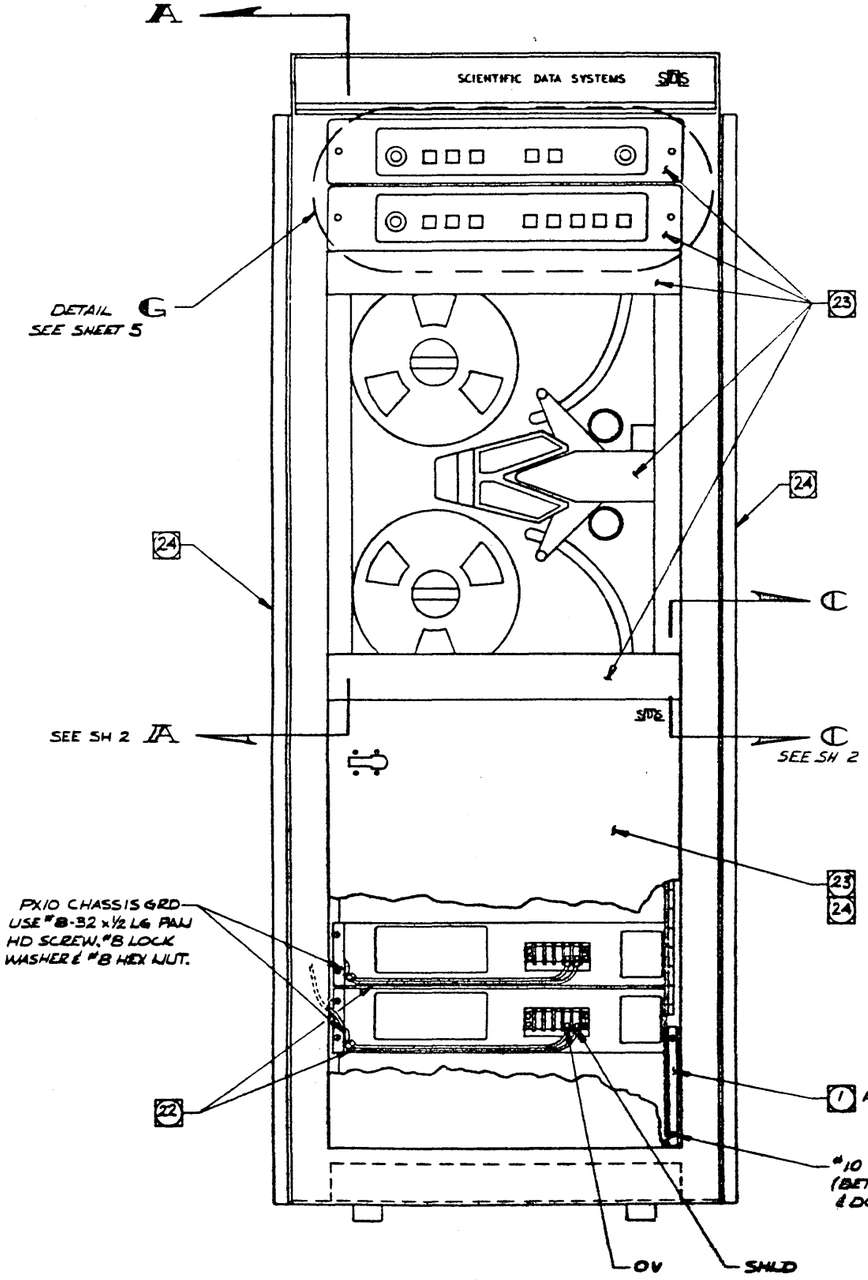

(19) MOUNT WITH #8-32 x 3/8 LG PAN HD SCREWS & #8 LOCK WASHERS; ALSO USE #8 FLAT WASHERS ON ALL SLOTS.

(20) REF INSTALLATION DWG 100852.

(21) REF INSTALLATION DWG 101612.

(22) (2) 13" LG JUMPERS FURNISHED WITH 9246 & 9248 ATTACH LARGE TERMINALS TO "CHASSIS GRD."

(23) THESE PARTS FINISHED PER SDS 100173 (WHITE)

(24) ATTACH POLYESTER FOAM SHEET (SDS 103692) TO INSIDE SURFACES OF INDICATED DOORS & PANELS WITH SUITABLE CEMENT.

(25) WHEN A POWER SUPPLY IS MOUNTED IN THIS LOCATION, THE COVERS ON THE CABINET BOTTOM MUST BE REMOVED AND THE CORRESPONDING BLOWER OUTLETS MUST BE ADJUSTED DOWNWARD.

(26) GRD WIRE - CONNECT P41 END TO POWER SUPPLY CHASSIS GRD IN MAG TAPE CABINET & P40 END TO CONVENIENT MTG SCREW IN ASSOCIATED COMPUTER CABINET.

(27) INSTALL IN LOCATION 25. NOTE THAT THE ZK57 TERM. MODULE SUPPLIED IN THIS LOCATION MUST BE DISCARDED

(28) IF A SINGLE PX10 IS USED, IT IS TO BE MOUNTED IN LOWEST POSITION.

(29) 100657-002 CABLE CLAMP. MOUNT TO REAR OF RETMA RAIL WITH #10-32 x 3/16 LG PAN HEAD SCREW, FLAT WASHER & LOCK WASHER.

(30) THE STD P40-P41 CABLE LENGTH IS 20 FT. VARIATIONS ARE AVAILABLE AS FOLLOWS:

SDS ASSY NO.		LENGTH
103381	-	11'
103380	-	30'
103379	-	40'

NOTES: UNLESS OTHERWISE SPECIFIED

(1) PART OF 9246, MAG TAPE UNIT 103060.

2. ALL HARDWARE USED IN MOUNTING 9246 MAG TAPE UNIT & 9248 MAG TAPE CONTROL UNIT IS FURNISHED WITH RESPECTIVE UNIT.

(3) MOUNT WITH #10-32 x 3/8 LG PAN HD SCREWS, #10 FLAT WASHERS & #10 LOCK WASHERS.

(4) MOUNT WITH #10-32 x 1/4 LG PAN HD SCREWS, #10 FLAT WASHERS & #10 LOCK WASHERS.

(5) MOUNT WITH #1/4-20 x 3/4 LG HEX HD SCREWS & 1/4 LOCK WASHERS.

(6) MOUNT IN THIS LOCATION FOR SHIPPING ONLY. FOR INSTALLATION IN ASSOCIATED COMPUTER SEE 102219.

(7) REF MODULE LOCATION CHART 103477.

(8) REF MODULE LOCATION CHART 103154.

(9) INSTALL IN LOCATION 11G OF 910 OR 920 COMPUTER.

(10) REF INSTALLATION DWG 101941.

(11) MOUNT WITH #10-32 x 1/2 LG HEX HD SCREWS, & #10 LOCK WASHERS.

(12) MOUNT WITH #10-32 x 1/2 LG PAN HD SCREWS, & #10 LOCK WASHERS.

(13) WHEN A 9246 MAG TAPE UNIT IS INSTALLED IN A 9210 CABINET THE FOLLOWING PARTS FURNISHED WITH 9246 ARE NOT USED:
(1) 101806-001 SPACER (1) 101806-002 SPACER
(1) 101875 BAR

(14) PART OF 103021 AUX. CONTROL PANEL.
CONNECT AS FOLLOWS: TB1-E-50 TO TB10-E-1
TB1-E-49 TO TB10-E-2
TB1-E-51 TO TB10-E-3
TB1-E-43 TO TB10-E-4

(15) CONNECT POWER WIRES FROM 9246 & 9248 TO BARRIER STRIP ON ASSOCIATED POWER SUPPLY AS FOLLOWS: TB1-E-3 TO 0V
TB1-E-4 TO +8V
TB1-E-5 TO -25V
TB1-E-6 TO +25V
AFTER CONNECTING, LACE WIRES TOGETHER WITH SUITABLE LACING CORD.

(16) REF INSTALLATION DWGS 101007 (9110) & 101006 (9119)

(17) ATTACH WITH #6-32 x 1/2 LG PAN HD SCREWS.

(18) SPACER TO BE INVERTED FOR USE ON 9110 OR 9119 CABINETS.

NO. REQ.	DRAWING NO.	DESCRIPTION	REFERENCE DESIGNATION	ITEM NO.
MATERIAL LIST				

NOTES UNLESS SPECIFIED
1. TOLERANCES .XX ±.010 ANGULAR .XXX ±.005 ±1/4°
2. BREAK ALL SHARP EDGES .010 APPROX.
3. MACH. SURFACES
4. ALL DIM. IN INCHES

DRAWN	Jack	11/16/63
CHECK	C.J. Perrault	1/5/63
APPR.	W.K.F.	8/29/63

SDS SCIENTIFIC DATA SYSTEMS
1542 FIFTEENTH STREET SANTA MONICA CALIFORNIA

TITLE
INSTALLATION DWG, MAG TAPE

MODEL NO. 9246 9248 9240
NEXT ASSY 103060 103061 103082

SIZE D | DWG. NO. 103476 | B

SCALE 1/4 SIZED | DO NOT SCALE DRAWING | SHEET 1 OF 6

103476 B

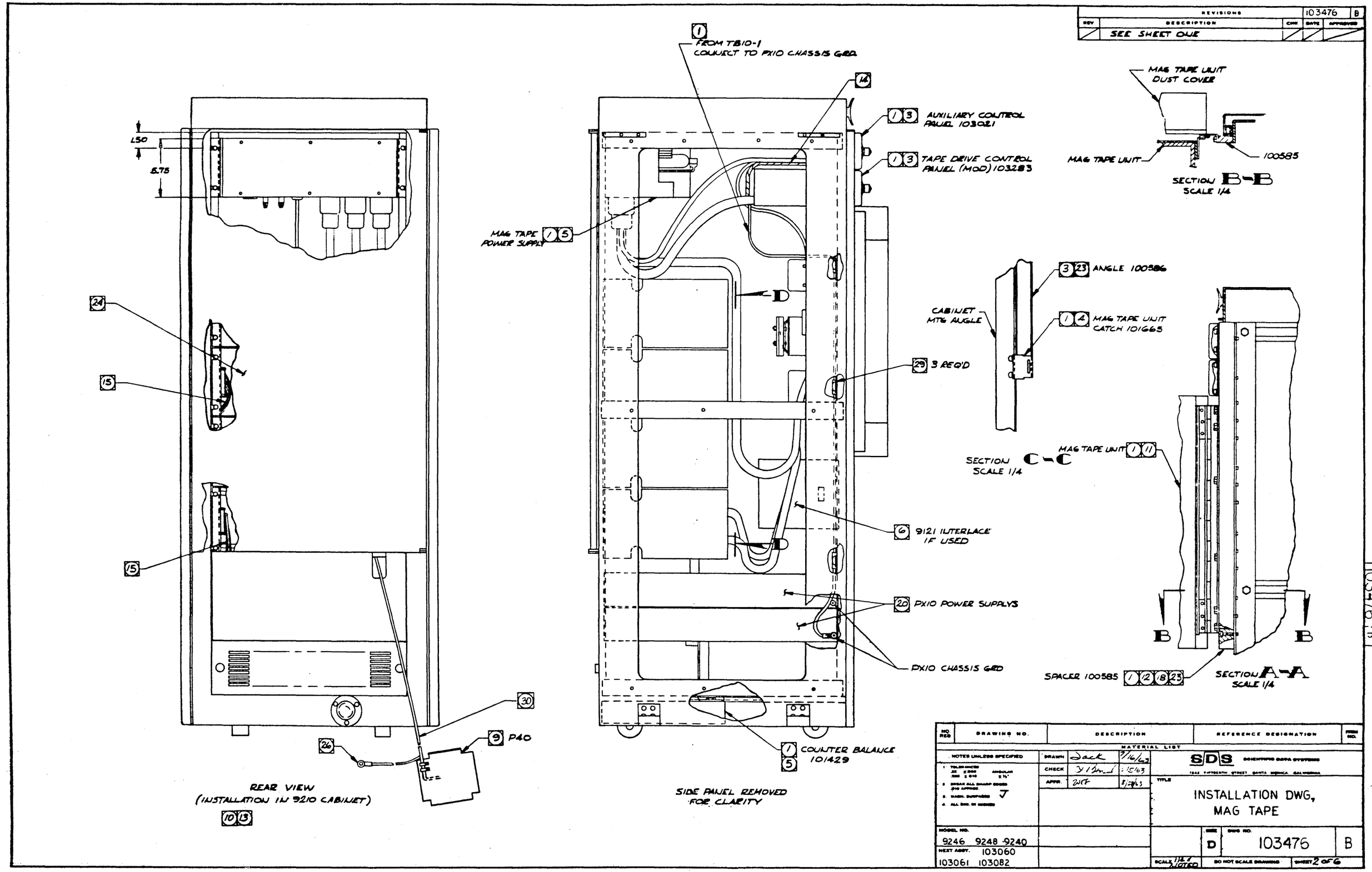

REVISIONS
103476 B
REV
DESCRIPTION
CHK
DATE
APPROVED
SEE SHEET ONE
1.50
5.75
24
15
15
30
9 P40
26
REAR VIEW
(INSTALLATION IN 9210 CABINET)
10 13
1
FROM TB10-1
CONNECT TO PX10 CHASSIS GRD
14
1 3 AUXILIARY CONTROL PANEL 103021
1 3 TAPE DRIVE CONTROL PANEL (MOD) 103283
MAG TAPE POWER SUPPLY 1 5
D
29 3 REQ'D
6 9121 INTERLACE IF USED
20 PX10 POWER SUPPLYS
PX10 CHASSIS GRD
1 5 COUNTER BALANCE 101429
SIDE PANEL REMOVED FOR CLARITY
MAG TAPE UNIT DUST COVER
MAG TAPE UNIT
100585
SECTION B-B
SCALE 1/4
3 23 ANGLE 100586
CABINET MTG ANGLE
1 4 MAG TAPE UNIT CATCH 101665
SECTION C-C
SCALE 1/4
MAG TAPE UNIT 1 11
B
B
SPACER 100585 1 12 18 23
SECTION A-A
SCALE 1/4
NO. REQ
DRAWING NO.
DESCRIPTION
REFERENCE DESIGNATION
ITEM NO.
MATERIAL LIST
NOTES UNLESS SPECIFIED
DRAWN Jack 7/16/63
CHECK 15/63
APPR. 8/23/63
SDS SCIENTIFIC DATA SYSTEMS
1542 FIFTEENTH STREET SANTA MONICA CALIFORNIA
TITLE
INSTALLATION DWG, MAG TAPE
MODEL NO.
9246 9248 9240
NEXT ASSY. 103060
103061 103082
SIZE D
DWG NO. 103476 B
SCALE 1/4 & NOTED
DO NOT SCALE DRAWING
SHEET 2 OF 6
103476 B

REVISIONS			103476	B
REV.	DESCRIPTION	CHK	DATE	APPROVED
	SEE SHEET ONE			

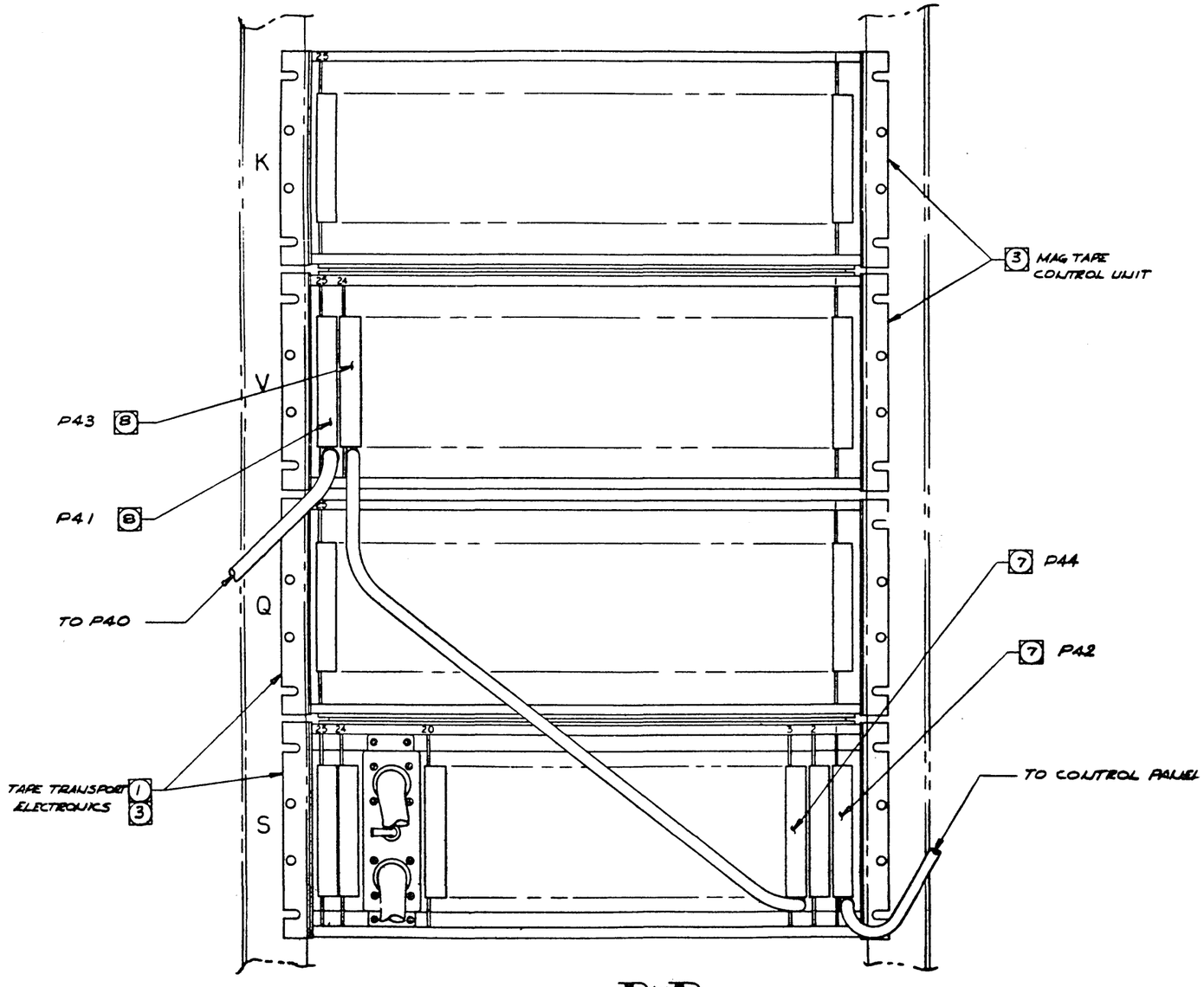

VIEW D-D
SCALE 1/2
(TYP BOTH CABINETS)

NO. REQ.	DRAWING NO.	DESCRIPTION	REFERENCE DESIGNATION	ITEM NO.

MATERIAL LIST

NOTES UNLESS SPECIFIED
1. TOLERANCES .XX ±.005 .XXX ±.010 ANGULAR ±½°
2. BREAK ALL SHARP EDGES .010 APPROX.
3. MACH. SURFACES ✓
4. ALL DIM. IN INCHES

DRAWN	Jack	7/16/63
CHECK	[illegible]	8/5/63
APPR.	WKF	8/27/63

SDS SCIENTIFIC DATA SYSTEMS
1542 FIFTEENTH STREET SANTA MONICA, CALIFORNIA

TITLE
INSTALLATION DWG.
MAG TAPE

MODEL NO.
9246 9248 9240
NEXT ASSY. 103060
103061 103082

SIZE D | DWG NO. 103476 | B

SCALE | DO NOT SCALE DRAWING | SHEET 3 OF 6

103476 B

REVISIONS				103476	B
REV.	DESCRIPTION	CHK	DATE	APPROVED	
	SEE SHEET ONE				

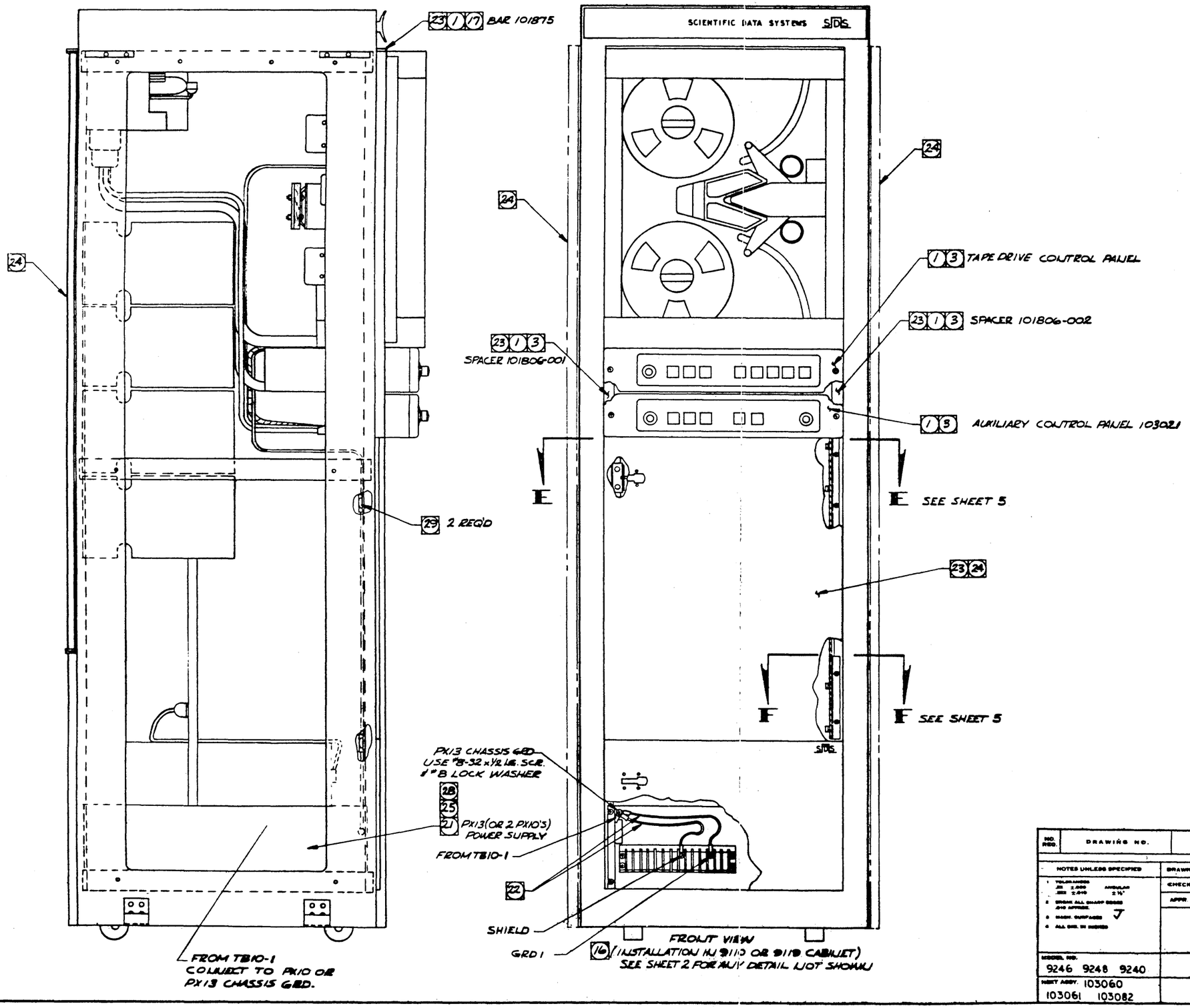

NO. REQ.	DRAWING NO.	DESCRIPTION	REFERENCE DESIGNATION	ITEM NO.

MATERIAL LIST

NOTES UNLESS SPECIFIED
1. TOLERANCES .XX ±.030 .XXX ±.010 ANGULAR ±1/2°
2. BREAK ALL SHARP EDGES .010 APPROX.
3. MACH. SURFACES J
4. ALL DIM. IN INCHES

DRAWN	Jack	7/16/63
CHECK	[illegible]	8/5/63
APPR.	[illegible]	8/29/63

SDS SCIENTIFIC DATA SYSTEMS
1542 FIFTEENTH STREET SANTA MONICA CALIFORNIA

TITLE
INSTALLATION DWG,
MAG TAPE

MODEL NO. 9246 9248 9240
NEXT ASSY. 103060 103061 103082

SIZE D | DWG NO. 103476 | B

SCALE 1/4 & NOTED | DO NOT SCALE DRAWING | SHEET 4 OF 6

103476 B

REVISIONS				103476	B
REV	DESCRIPTION	CHK	DATE	APPROVED	
	SEE SHEET ONE				

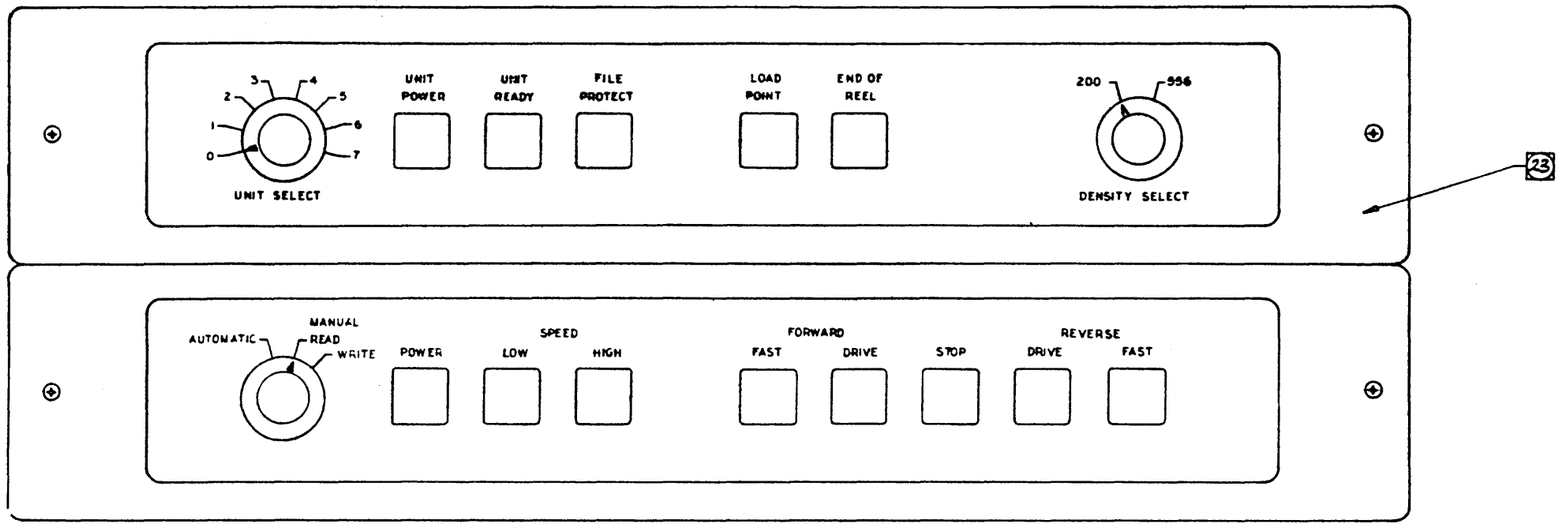

DETAIL G
SCALE 1/1
SEE SHEET 1

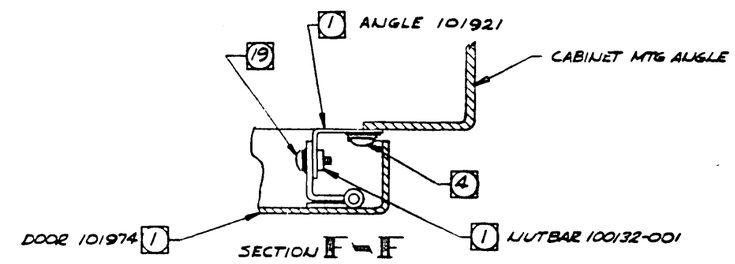

SECTION F-F
PARTIAL
SCALE 1/1
SEE SHEET 5
(TYP BOTH CABINETS)

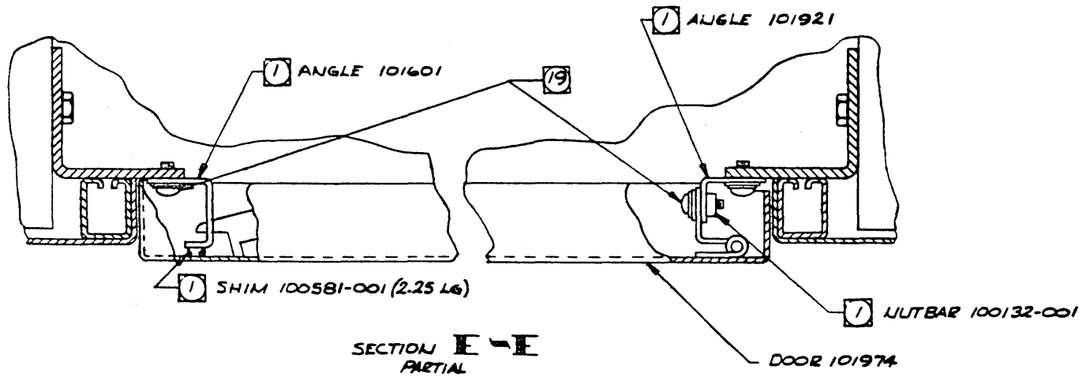

SECTION E-E
PARTIAL
SCALE 1/1
SEE SHEET 5
(TYP BOTH CABINETS)

NO. REQ.	DRAWING NO.	DESCRIPTION	REFERENCE DESIGNATION	ITEM NO.

MATERIAL LIST

NOTES UNLESS SPECIFIED
1. TOLERANCES .XX ±.030 .XXX ±.010 ANGULAR ±½°
2. BREAK ALL SHARP EDGES .010 APPROX.
3. MACH. SURFACES √
4. ALL DIM. IN INCHES

DRAWN	Jack	7/16/63
CHECK	[illegible]	
APPR.	[illegible]	8/29/63

SDS SCIENTIFIC DATA SYSTEMS
1542 FIFTEENTH STREET SANTA MONICA CALIFORNIA

TITLE
INSTALLATION DWG,
MAG TAPE

MODEL NO.
9246 9248 9240
NEXT ASSY. 103060
103061 103082

SIZE D | DWG NO. 103476 | B

SCALE | DO NOT SCALE DRAWING | SHEET 5 OF 6

103476 B

REVISIONS				103476	B
REV	DESCRIPTION	CHK	DATE	APPROVED	
	SEE SHEET ONE				

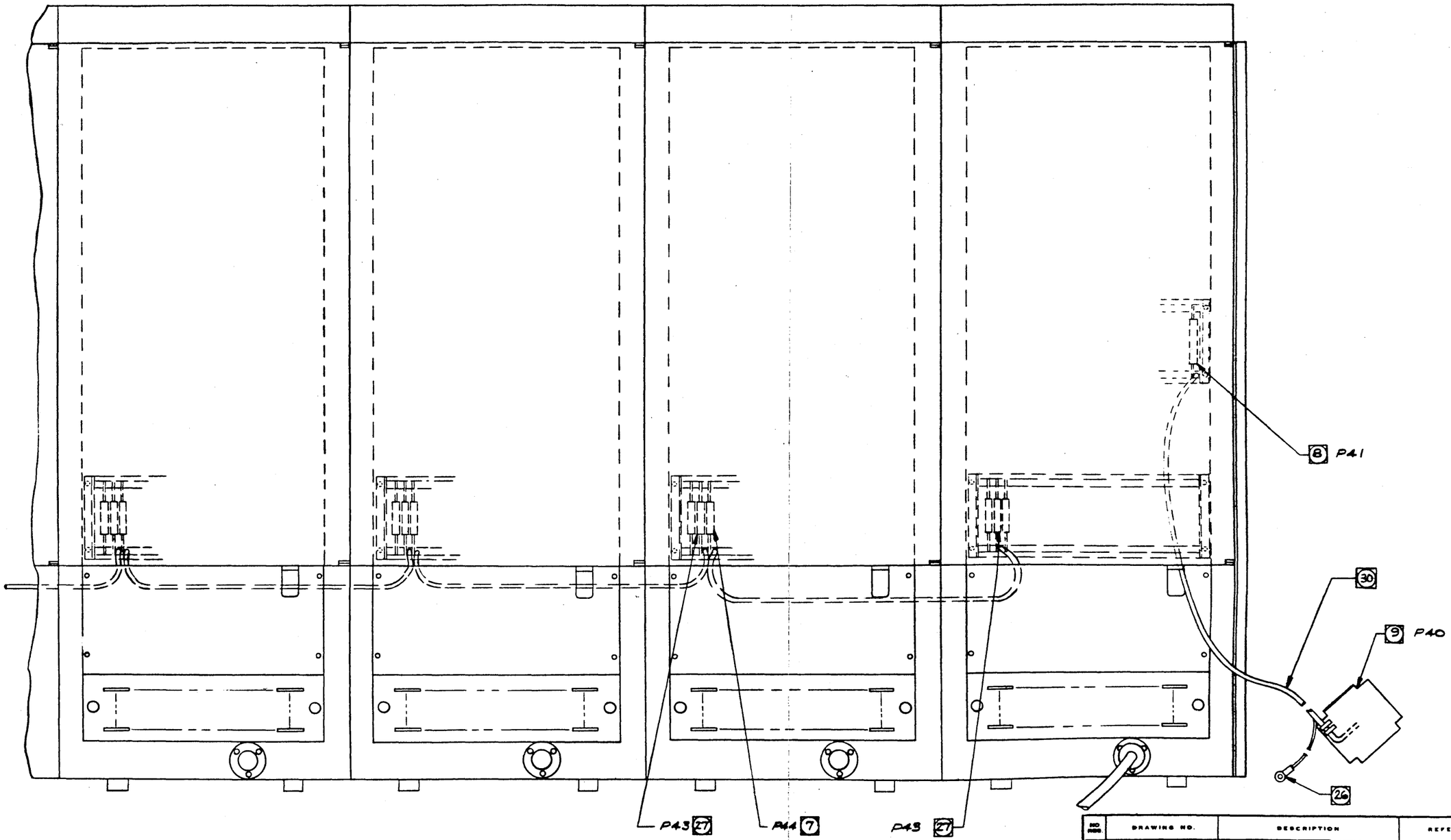

TYPICAL MULTIPLE
CABINET INSTALLATION
WITH SIDE PANELS REMOVED
& CABINETS BOLTED TOGETHER

NO. REQ.	DRAWING NO.	DESCRIPTION	REFERENCE DESIGNATION	ITEM NO.

MATERIAL LIST

NOTES UNLESS SPECIFIED
1. TOLERANCES .XX ±.030 .XXX ±.010 ANGULAR ±½°
2. BREAK ALL SHARP EDGES .010 APPROX.
3. MACH. SURFACES
4. ALL DIM. IN INCHES

DRAWN	Jack	7/16/63
CHECK	N. Menish	8/5/63
APPR.	[illegible]	[illegible]

SDS SCIENTIFIC DATA SYSTEMS
1542 FIFTEENTH STREET SANTA MONICA CALIFORNIA

TITLE
INSTALLATION DWG,
MAG TAPE

MODEL NO. 9246 9248 9240
NEXT ASSY. 103060
103061 103082

SIZE D | DWG NO. 103476 | B

SCALE 1/2 & NOTED | DO NOT SCALE DRAWING | SHEET 6 OF 6

103476 B

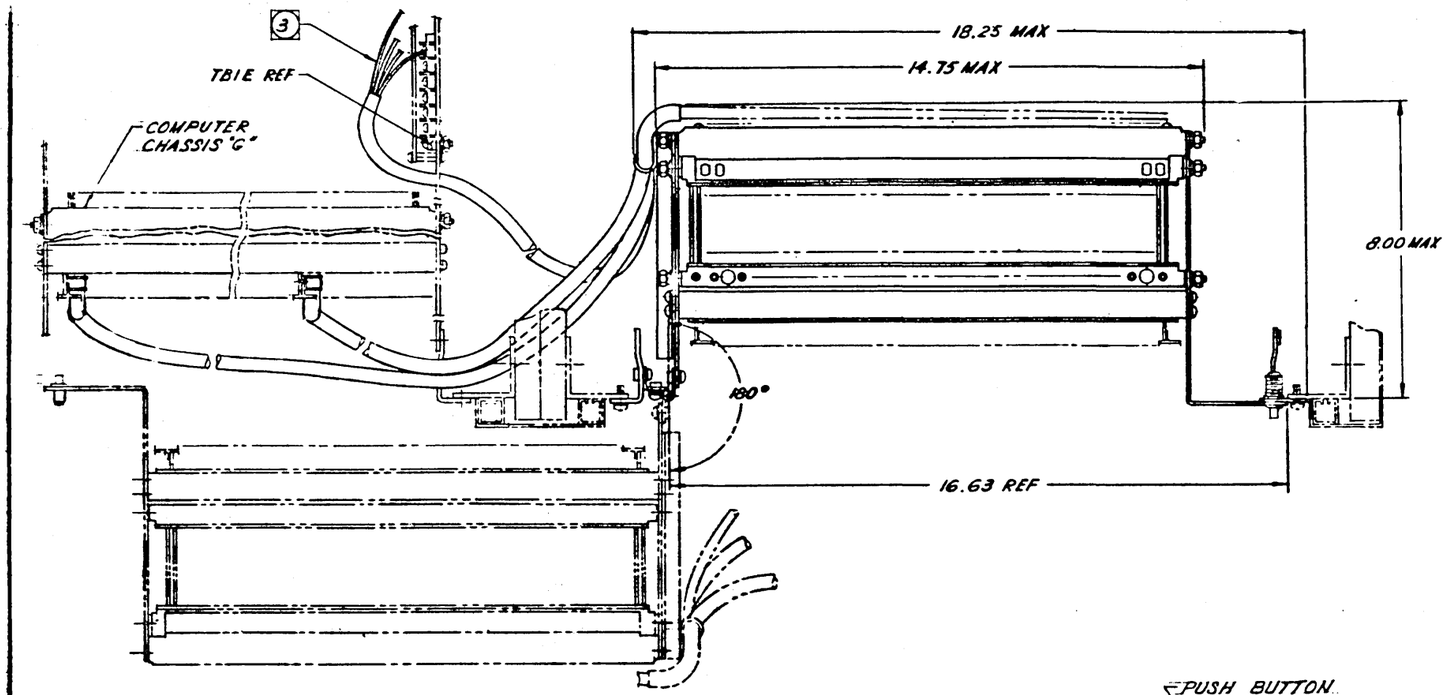

NOTES: UNLESS OTHERWISE SPECIFIED

1. MATERIAL: CHASSIS - STEEL, CAD PLATED, CLEAR CHROMATE DIPPED. HARDWARE - STEEL, CAD PLATED.
2. INSTALL AS FOLLOWS (AFTER REMOVING WIRES AROUND RECEPTACLE J(25G) IN ASSOCIATED 910/920 COMPUTER): IF UNIT IS FIRST INTERLACE USED - INSTALL P10 IN RECEPTACLE J(6G) & P11 IN RECEPTACLE J(25G) OF COMPUTER IF UNIT IS SECOND INTERLACE USED - INSTALL P10 IN RECEPTACLE J(45L) & P11 IN RECEPTACLE J(44L) OF FIRST INTERLACE. CABLES ARE 4 FT LONG
3. POWER CABLE ENDS ARE TAGGED AS TO DESTINATION IN ASSOCIATED 910/920 COMPUTER; CABLE IS 5FT LONG.
4. CHASSIS LETTER DESIGNATION IS "L"
5. REMOVE BOTH SIDE PANELS & MOUNT TO PANELS FURNISHED WITH COMPUTER, USING EXISTING HARDWARE.
6. REF INSTALLATION PROCEDURE 101955.

REVISIONS				102219	3
REV	DESCRIPTION	CHK	DATE	APPROVED	
A	RELEASED TO MFG.	[illegible]	[illegible]	[illegible]	
B	SEE REVISION EO.	[illegible]	[illegible]	[illegible]	

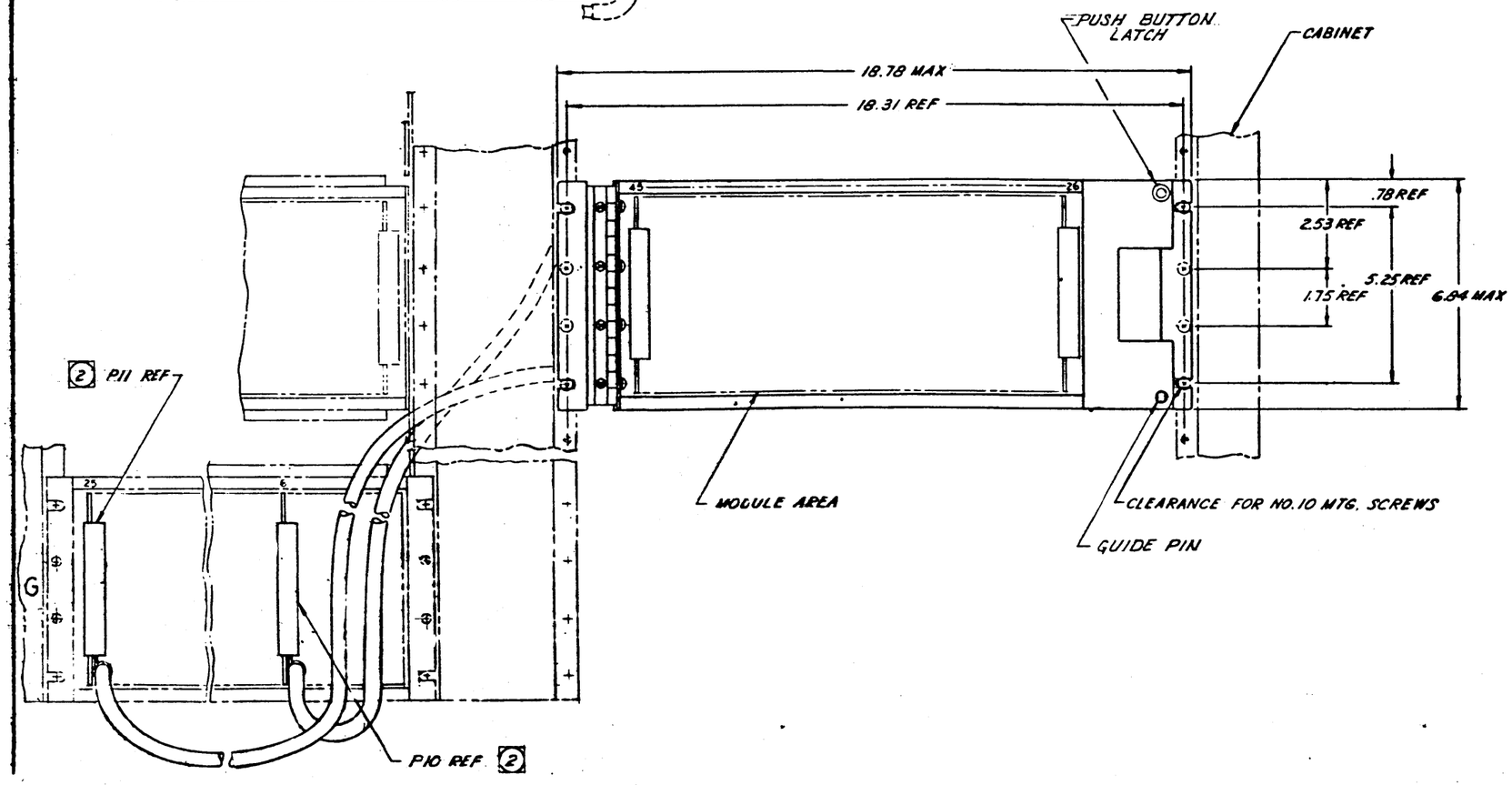

INSTALLATION IN CABINET

NO. REQ	DRAWING NO.	DESCRIPTION	REFERENCE DESIGNATION	ITEM NO.

MATERIAL LIST

NOTES UNLESS SPECIFIED
1. TOLERANCES .XX ± .010 .XXX ± .010 ANGULAR ± ½°
2. BREAK ALL SHARP EDGES .010 APPROX
3. MACH. SURFACES J
4. ALL DIM. IN INCHES

DRAWN	[illegible]	1/22/63
CHECK	[illegible]	1/25/63
APPR.	[illegible]	2/21/63

SDS SCIENTIFIC DATA SYSTEMS
1542 FIFTEENTH STREET, SANTA MONICA, CALIFORNIA

TITLE: INSTALLATION DWG, INTERLACE

MODEL NO. 9121
NEXT ASSY 101688

SIZE D | DWG NO. 102219 | B

SCALE 12.5 NOTED | DO NOT SCALE DRAWING | SHEET 1 OF 2

102219 B

REVISIONS				102219	B
REV	DESCRIPTION	CHK	DATE	APPROVED	
	SEE SHT. 1				

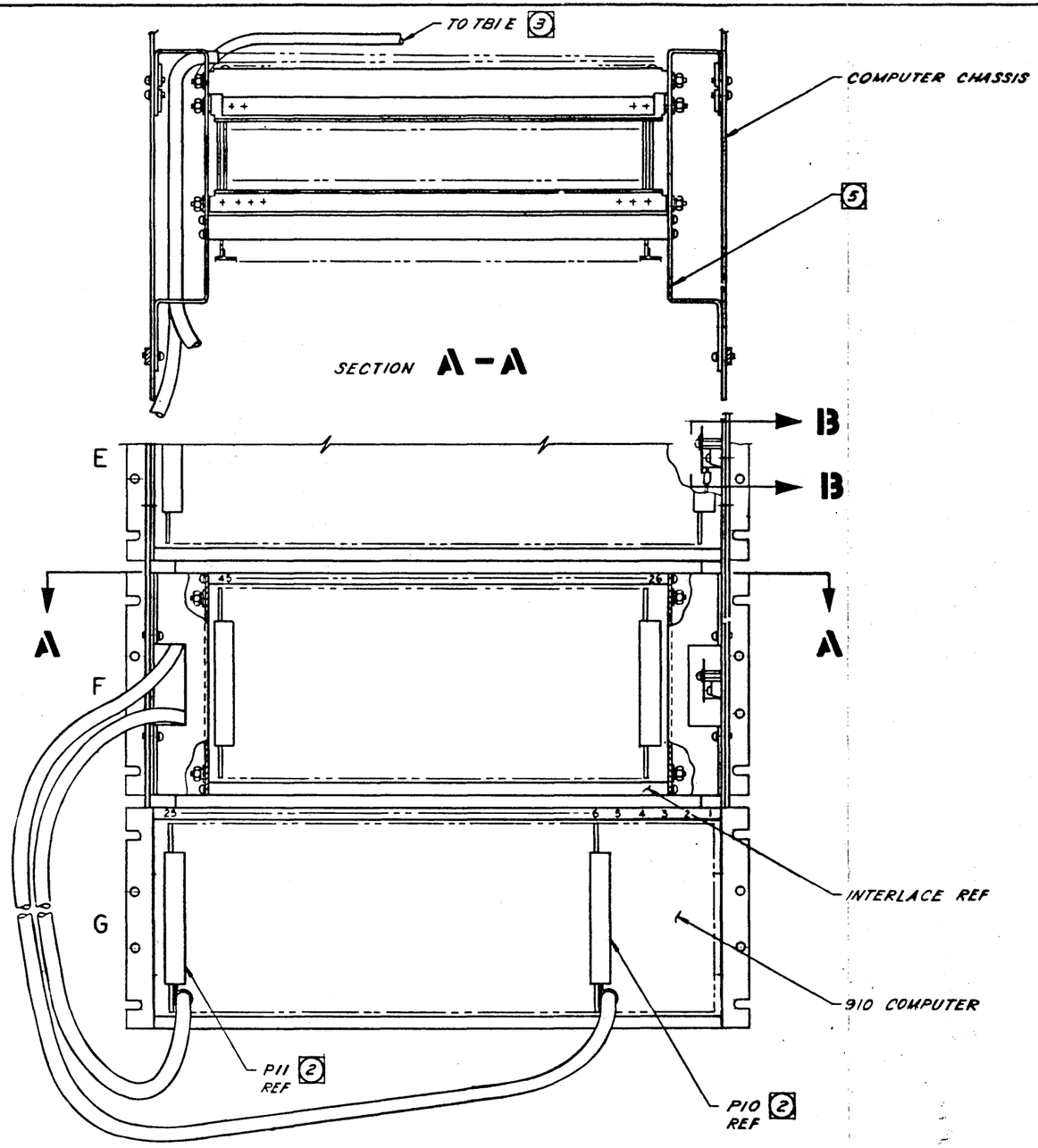

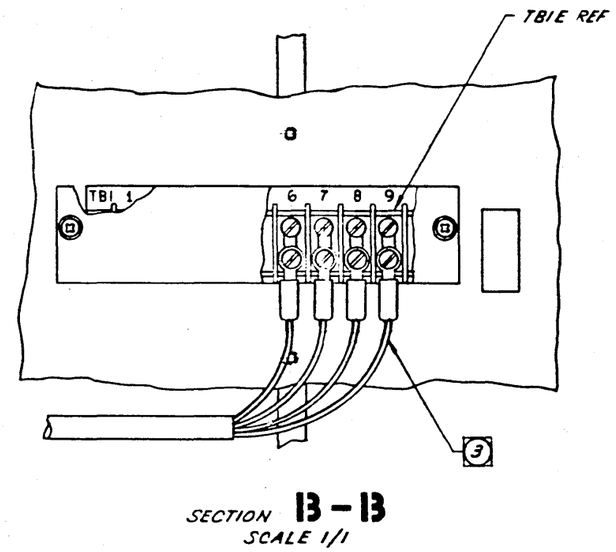

ALTERNATE INSTALLATION IN CHASSIS "F" OF 910 COMPUTER.

NO. REQ	DRAWING NO	DESCRIPTION	REFERENCE DESIGNATION	ITEM NO.
		MATERIAL LIST		

NOTES UNLESS SPECIFIED
1. TOLERANCES .XX ± .030 .XXX ± .010 ANGULAR ± 1/2°
2. BREAK ALL SHARP EDGES .010 APPROX
3. MACH. SURFACES √
4. ALL DIM. IN INCHES

DRAWN	[signature]	2-4-63
CHECK	[signature]	5-23-63
APPR	[signature]	2/21/63

SDS SCIENTIFIC DATA SYSTEMS
1542 FIFTEENTH STREET SANTA MONICA CALIFORNIA

TITLE: INSTALLATION DWG, INTERLACE

MODEL NO. 9121
NEXT ASSY. 101683

SIZE D | DWG NO 102219 | B

SCALE | DO NOT SCALE DRAWING | SHEET 2 OF 2

102219 B