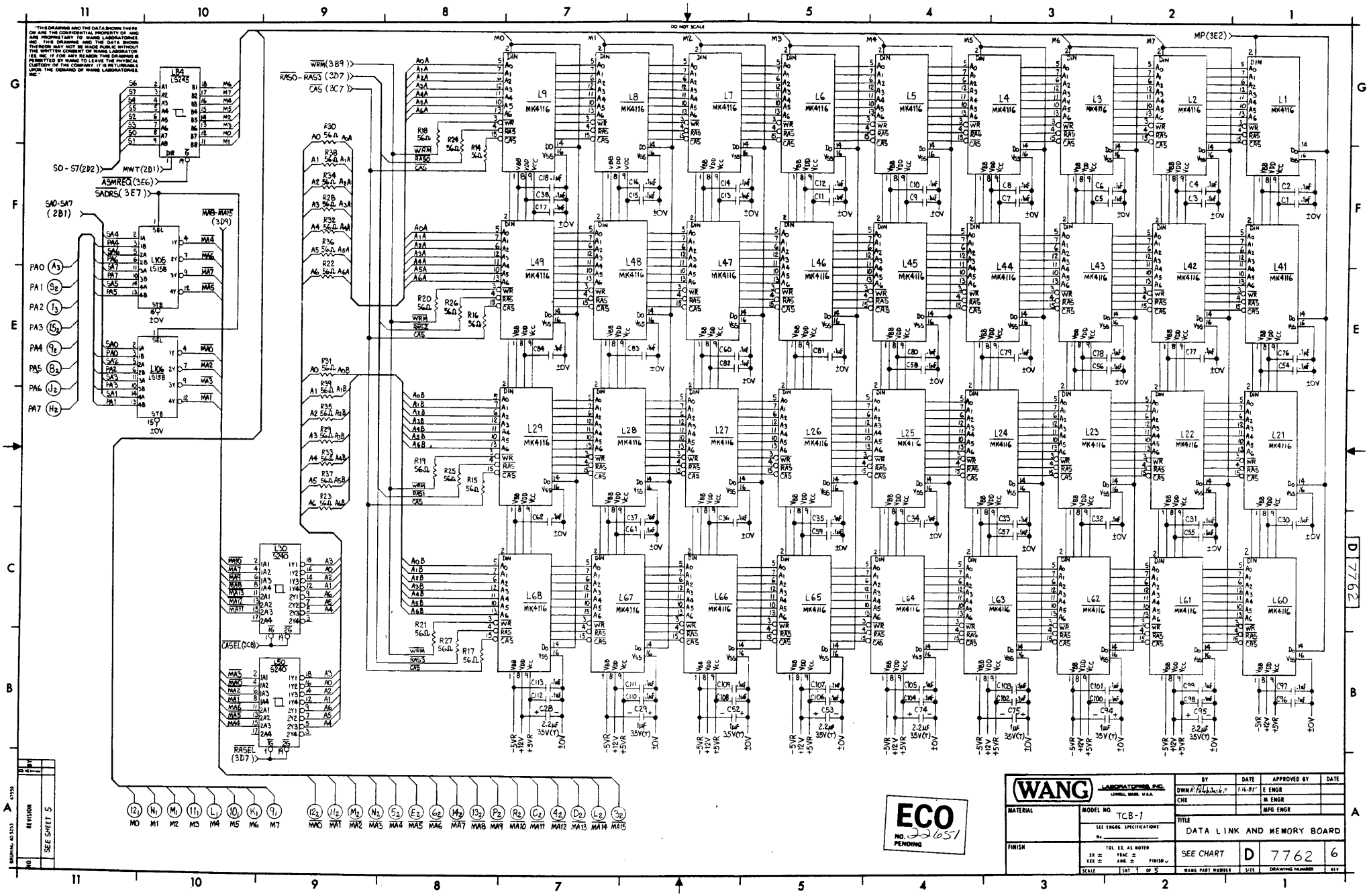
"THIS DRAWING AND THE DATA SHOWN THERE ON ARE THE CONFIDENTIAL PROPERTY OF AND ARE PROPRIETARY TO WANG LABORATORIES, INC. THIS DRAWING AND THE DATA SHOWN THEREON MAY NOT BE MADE PUBLIC WITHOUT THE WRITTEN CONSENT OF WANG LABORATORIES, INC. IF FOR ANY REASON THIS DRAWING IS PERMITTED BY WANG TO LEAVE THE PHYSICAL CUSTODY OF THE COMPANY IT IS RETURNABLE UPON THE DEMAND OF WANG LABORATORIES, INC."
DO NOT SCALE
WANG LABORATORIES, INC.
LOWELL, MASS. U.S.A.
MATERIAL
FINISH
MODEL NO. TCB-1
SEE ENGRG. SPECIFICATIONS
TOL EX. AS NOTED
XX ± FRAC ± FINISH
XXX ± ANG. ±
SCALE SHT 1 OF 5
BY DATE APPROVED BY DATE
DWN 1-16-81 E ENGR
CHK M ENGR
MFG ENGR
TITLE
DATA LINK AND MEMORY BOARD
SEE CHART
D 7762 6
WANG PART NUMBER SIZE DRAWING NUMBER REV
ECO
NO. 22651
PENDING
REVISION
NO. SEE SHEET 5
DRAWING NO 5253
D 7762

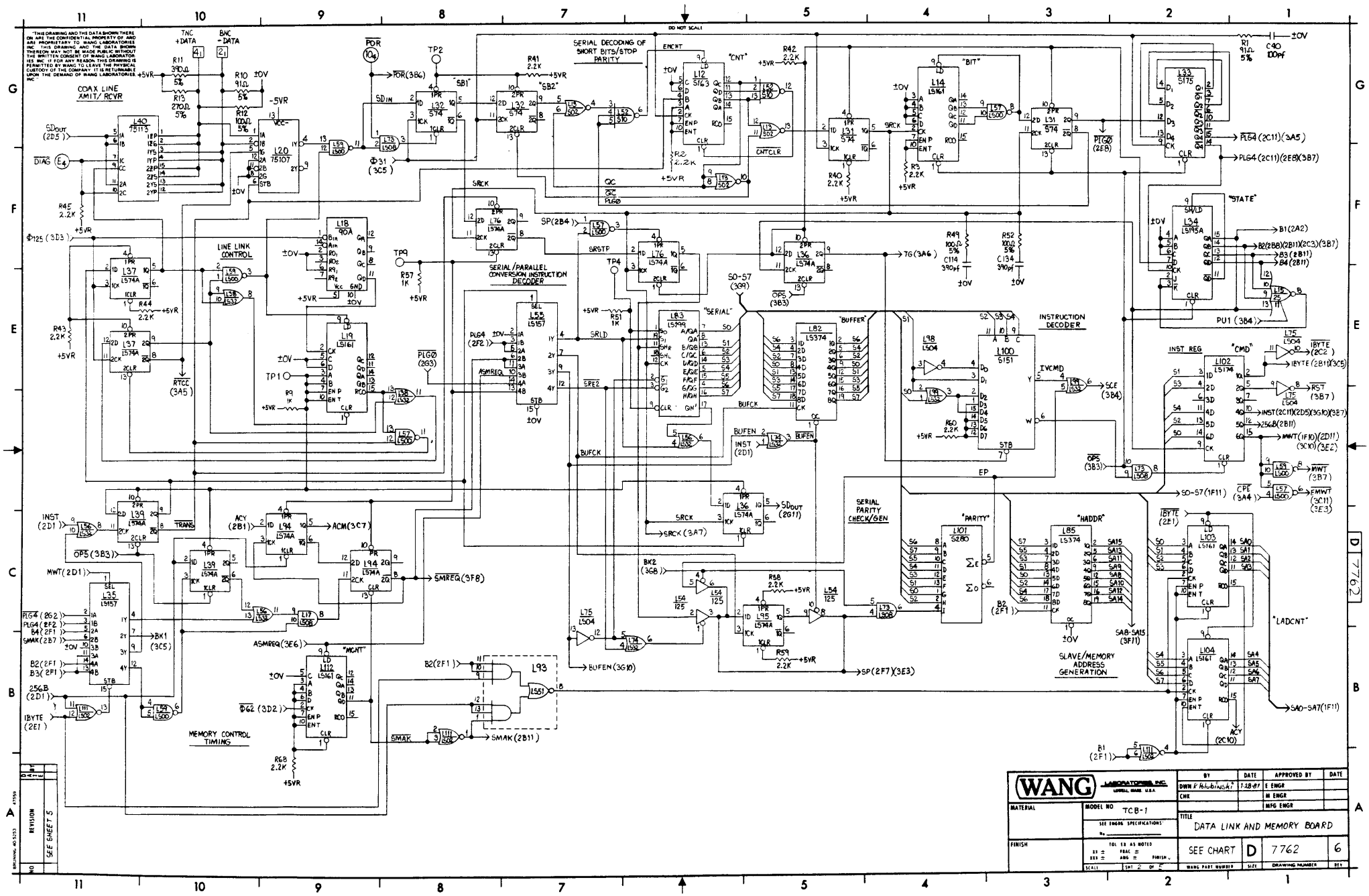
COAX LINE XMIT/RCVR
SERIAL DECODING OF SHORT BITS/STOP PARITY
LINE LINK CONTROL
SERIAL/PARALLEL CONVERSION INSTRUCTION DECODER
INSTRUCTION DECODER
SERIAL PARITY CHECK/GEN
SLAVE/MEMORY ADDRESS GENERATION
MEMORY CONTROL TIMING
"CNT"
"BIT"
"STATE"
"SERIAL"
"BUFFER"
"CMD"
"PARITY"
"HADDR"
"MGNT"
"LADCNT"
INST REG
WANG
LABORATORIES, INC.
LOWELL, MASS. U.S.A.
MATERIAL
MODEL NO TCB-1
FINISH
DATA LINK AND MEMORY BOARD
SEE CHART
D
7762
6
REVISION
SEE SHEET 5

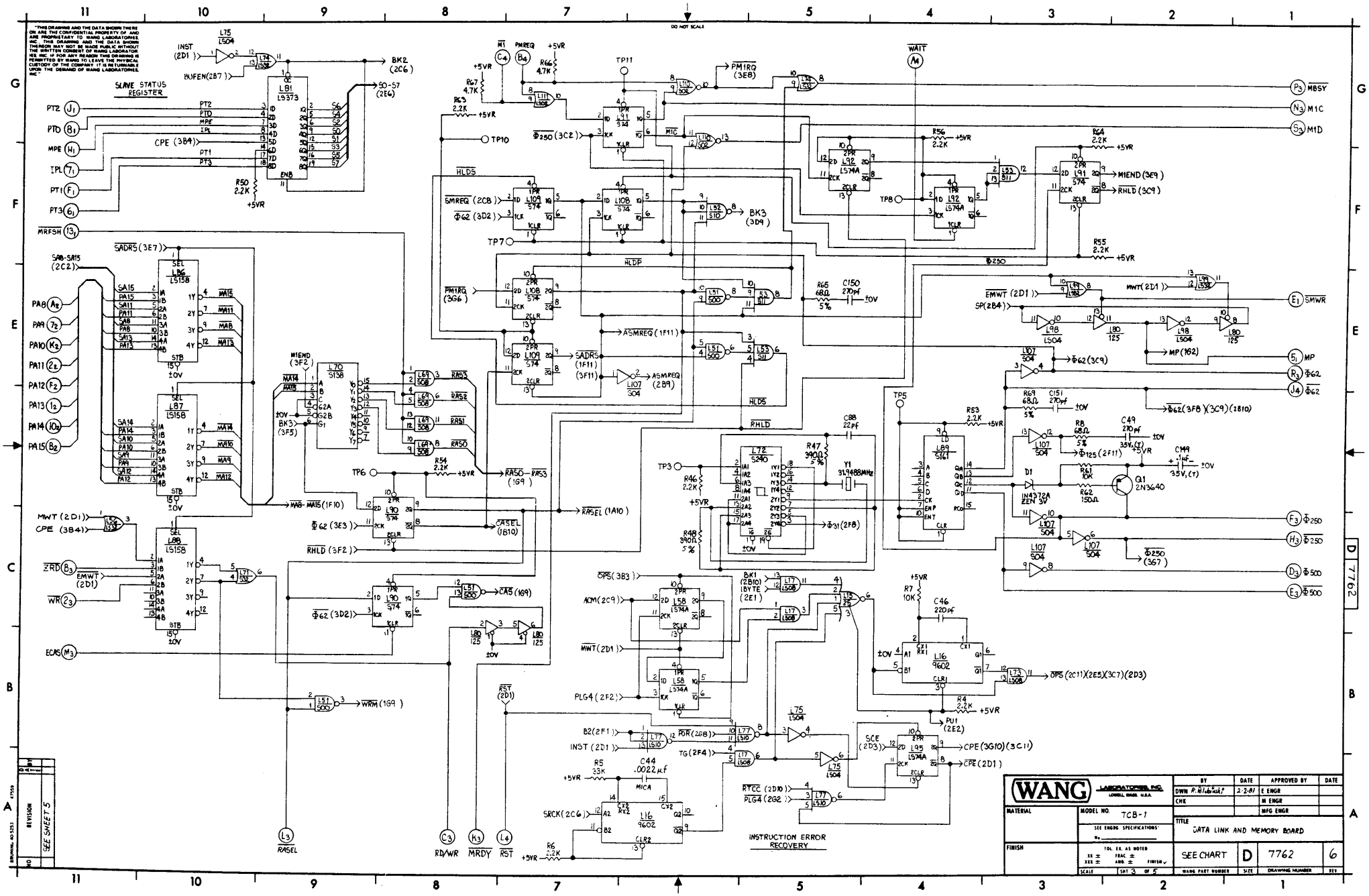
SLAVE STATUS REGISTER
INSTRUCTION ERROR RECOVERY
WANG LABORATORIES, INC.
DATA LINK AND MEMORY BOARD
MODEL NO. TCB-1
SEE CHART
D
7762
6
SEE SHEET 5

THIS DRAWING AND THE DATA SHOWN THEREON ARE THE CONFIDENTIAL PROPERTY OF WANG ARE PROPRIETARY TO WANG LABORATORIES INC. AND SHALL NOT BE MADE PUBLIC WITHOUT THE WRITTEN CONSENT OF WANG LABORATORIES INC. IF FOR ANY REASON THIS DRAWING IS PERMITTED BY WANG TO LEAVE THE PHYSICAL CUSTODY OF THE COMPANY IT IS RETURNABLE UPON THE DEMAND OF WANG LABORATORIES INC.

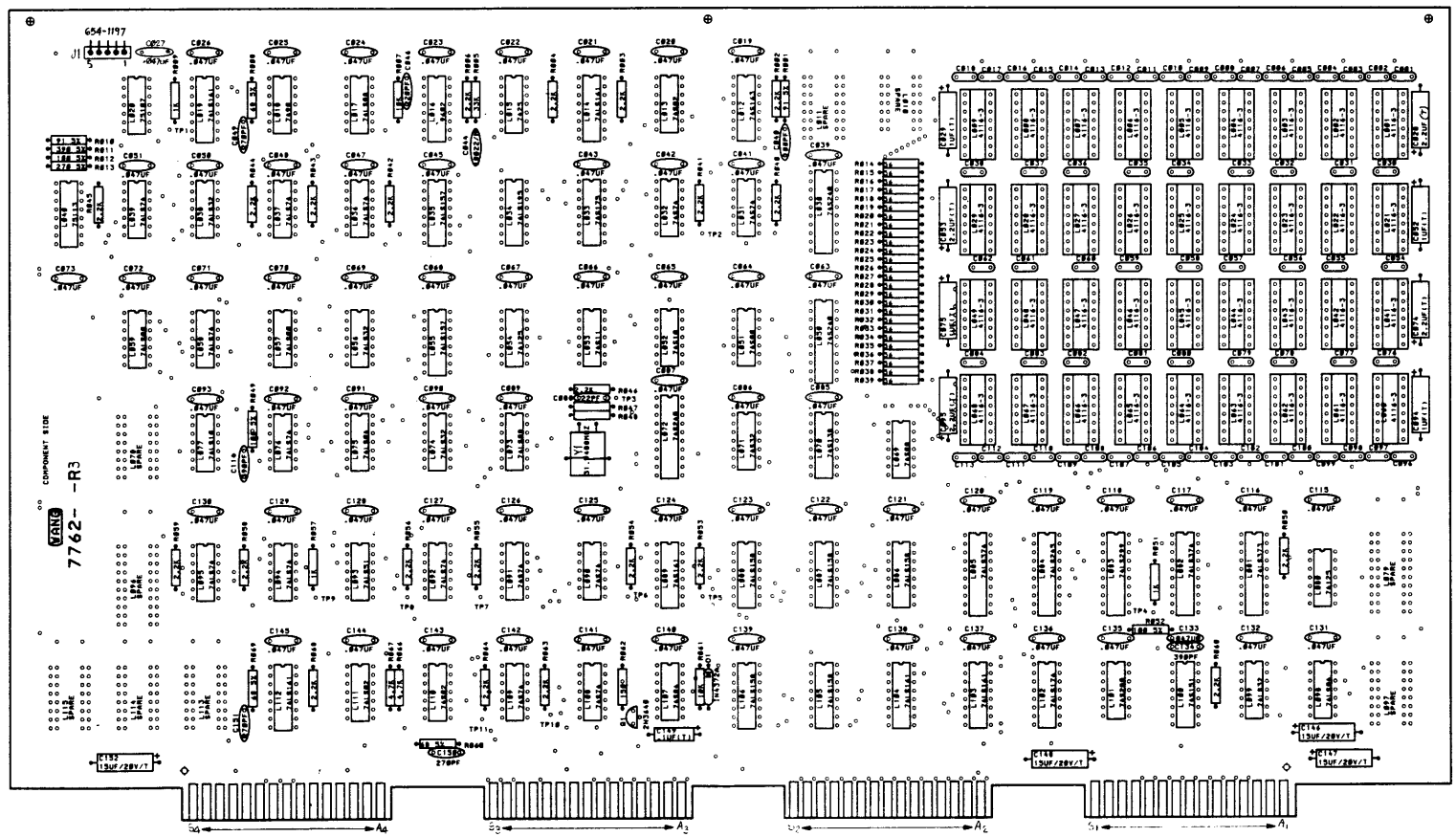

REVISION	BY
SEE SHEET 5	

WANG LABORATORIES INC. LOWELL MASS U.S.A.	BY	DATE	APPROVED BY	DATE
DWN R Blubinski		2-6-81	E ENGR	
CHK			M ENGR	
			MFG ENGR	

MATERIAL	MODEL NO TCB-1	TITLE DATA LINK AND MEMORY BOARD		
FINISH	SEE ENGRG SPECIFICATIONS No.	SEE CHART	D	7762	6
	TOL EX AS NOTED	WANG PART NUMBER	SIZE	DRAWING NUMBER	REV
	SCALE	SHT 4 OF 5			

D 7762

"THIS DRAWING AND THE DATA SHOWN THERE ON ARE THE CONFIDENTIAL PROPERTY OF AND ARE PROPRIETARY TO WANG LABORATORIES, INC. THIS DRAWING AND THE DATA SHOWN THEREON MAY NOT BE MADE PUBLIC WITHOUT THE WRITTEN CONSENT OF WANG LABORATORIES, INC. IF FOR ANY REASON THIS DRAWING IS PERMITTED BY WANG TO LEAVE THE PHYSICAL CUSTODY OF THE COMPANY, IT IS RETURNABLE UPON THE DEMAND OF WANG LABORATORIES, INC."

DO NOT SCALE

I.C. LOCATION	TYPE	W.L. PART NO.
L1-9, 21-29, 41-49, 60-68	MK4116-N3	SEE CHART
L10, 11, 78, 79, 96, 97, 113-115	SPARES	
L12	74S163	376-0235
L13, 110	74S02	376-0199
L14, 19, 103, 104, 112	74LS161	376-0233
L15	7425	376-0092
L16	9602	376-0104
L17, 73	74LS08	376-0153
L18	7490A	376-0073
L20	75107	376-0146
L30, 50, 72	74S240	376-0334
L31, 32, 90, 91, 108, 109	74S74	376-0202
L33	74S175	376-0270
L34	74LS195A	376-0248
L35, 55	74LS157	376-0216
L36, 37, 39, 58, 76, 92, 94, 95	74LS74A	376-0155
L38, 56, 74, 99	74LS32	376-0211
L40	75113	376-0256
L51	74S00	376-0228
L57, 59	74LS00	376-0207
L52	74S10	376-0238
L53	74S11	376-0237
L54, 80	74125	376-0324
L69	74S08	376-0200
L70	74S138	376-0298
L71	74S32	376-0205
L75, 98	74LS04	376-0180
L77	74LS10	376-0209
L81	74LS373	376-0310
L82, 85	74LS374	376-0286
L83	74LS299	376-0303
L84	74LS245	376-0285
L86-88, 105, 106	74LS158	376-0293
L89	74S161	376-0278
L93	74LS51	376-0213
L100	74S151	376-0336
L101	74S280	376-0246
L102	74LS174	376-0159
L107	74S04	376-0197
L111	74LS02	376-0208
L1-9, 21-29, 41-49, 60-68	SKT, 16 PIN	376-9002

TYPE	I.C. LOCATION	SPARES
74S02	L13	1
	L110	2
74LS04	L98	3
74S32	L71	3
74LS32	L38	2
74LS51	L93	1
74125	L54	1

COMPONENT	TYPE	W.L. PART NO.
J1	CONN, 5 PIN	654-1197
D1	IN4372A, 3V	380-2129
R1, 10	91Ω, ¼W, 5%	330-1092
R2-4, 6, 40-46, 50, 53-56, 58-60, 63, 64, 68	2.2K, ¼W, 10%	330-3022
R5	33K, ¼W, 10%	330-4033
R7, 61	10K, ¼W, 10%	330-4010
R8, 65, 69	68Ω, ¼W, 5%	330-1069
R9, 51, 57	1K, ¼W, 10%	330-3010
R11, 47, 48	390Ω, ¼W, 5%	330-2040
R62	150Ω, ¼W, 10%	330-2015
R12, 49, 52	100Ω, 1W, 5%	332-2011
R13	270Ω, ¼W, 5%	330-2028
R14-39	56Ω, ¼W, 10%	330-1056
R66, 67	4.7K, ¼W, 10%	330-3047
C1-18, 30-38, 54-62, 76-84, 96-113	.1µf, 50V	300-1930
C19-27, 39, 41-43, 45, 47, 48, 50, 51, 63-73, 85-87, 89-93, 115-133, 135-145	.047µf, 50V	300-1966
C29, 52, 75, 94	1µf, 35V, (T)	300-4000
C40	100pf, 100V	300-1944
C44	.0022µf, 500V, MICA	300-5012
C46	220pf, 500V	300-1220
C49, 150, 151	270pf, 500V	300-1270
C88	22pf	300-1022
C28, 53, 74, 95	2.2µf 35V, (T)	300-4027
C114, 134	390pf, 500V	300-1390
C146-148, 152	15µf, 20V, (T)	300-4022
C149	.1µF 35V, (T)	300-4002
Q1	2N3640	375-1003
Y1	31.9488MHz	321-0044

MNEMONICS	COORD.
BNC-DATA	2G9
DIAG	2F11
ECAS	3B11
IPL	3F11
MAØ-MA15	1A9
MBSY	3G1
MØ-M7	1A10
MP	3E1
MPE	3F11
M1	3G8
MRDY	3A8
MRFSH	3F11
MIC	3G1
M1D	3G1
PAØ-PA7	1E11
PA8-PA15	3E11
PMREQ	3G7
POR	2G9
PTØ	3G11
PT1	3F11
PT2	3G11
PT3	3F11
RASEL	3A9
RD/WR	3A8
RST	3A7
SMWR	3E1
TNC+DATA	2G9
WAIT	3G4
WR	3C11
ZRD	3C11
Φ62	3E1
Φ62	3E1
Φ250	3C1
Φ250	3C1
Φ500	3C1
Φ500	3C1

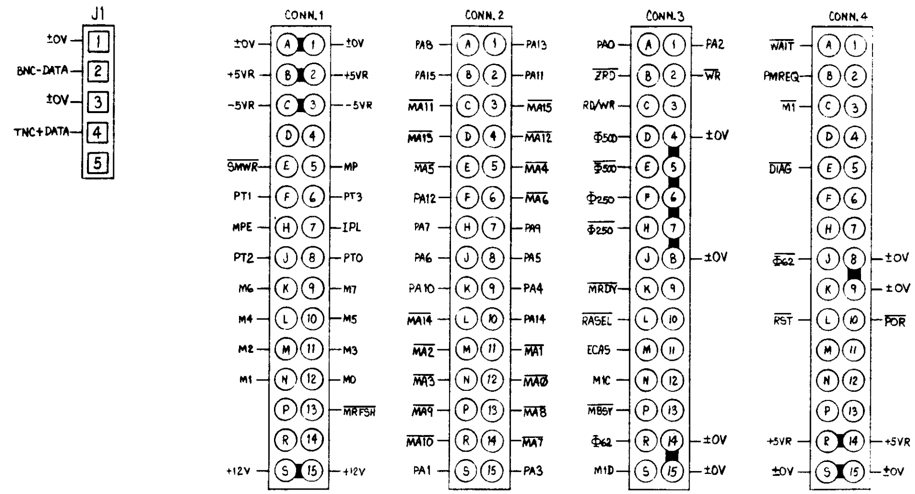

210=209+377 OR 378		
210	209	L1-9, 21-29, 41-49, 60-68
7762-A	7762	377-0345-M

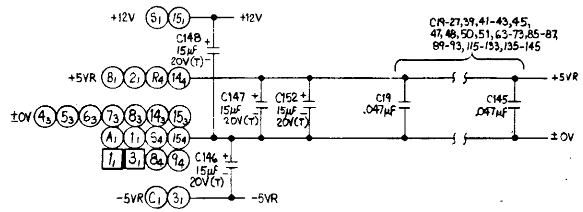

E-REV 3

REV	DATE	BY	REVISION
0	2-6-81	R.B.P.	ORIG PER DWR# E1025 APP'D:
1	3-18-81	LK	REVISED PER ECO# 18534 APP'D:
2	6-3-81	SDB	REVISED PER ECO# 9107 APP'D:
3	6-3-81	SDB	REVISED PER ECO# 19437 APP'D:
4	7-28-81	R.B.P.	REVISED PER ECO# 19959, 19556 APP'D: 7-29-81
5	10-1-81	D.S.	REVISED PER ECO# 20707 APP'D 10/1/81
6	4-5-82	D.S.	REVISED PER ECO# 22104 APP'D: 4/7/82

WANG LABORATORIES, INC. LOWELL, MASS. U.S.A.

MODEL NO. TCB-1

TITLE: DATA LINK AND MEMORY BOARD

DWN R.B.P. 2-6-81 · E ENGR 4/3/81

SEE CHART | D | 7762 | 6

SHT 5 OF 5

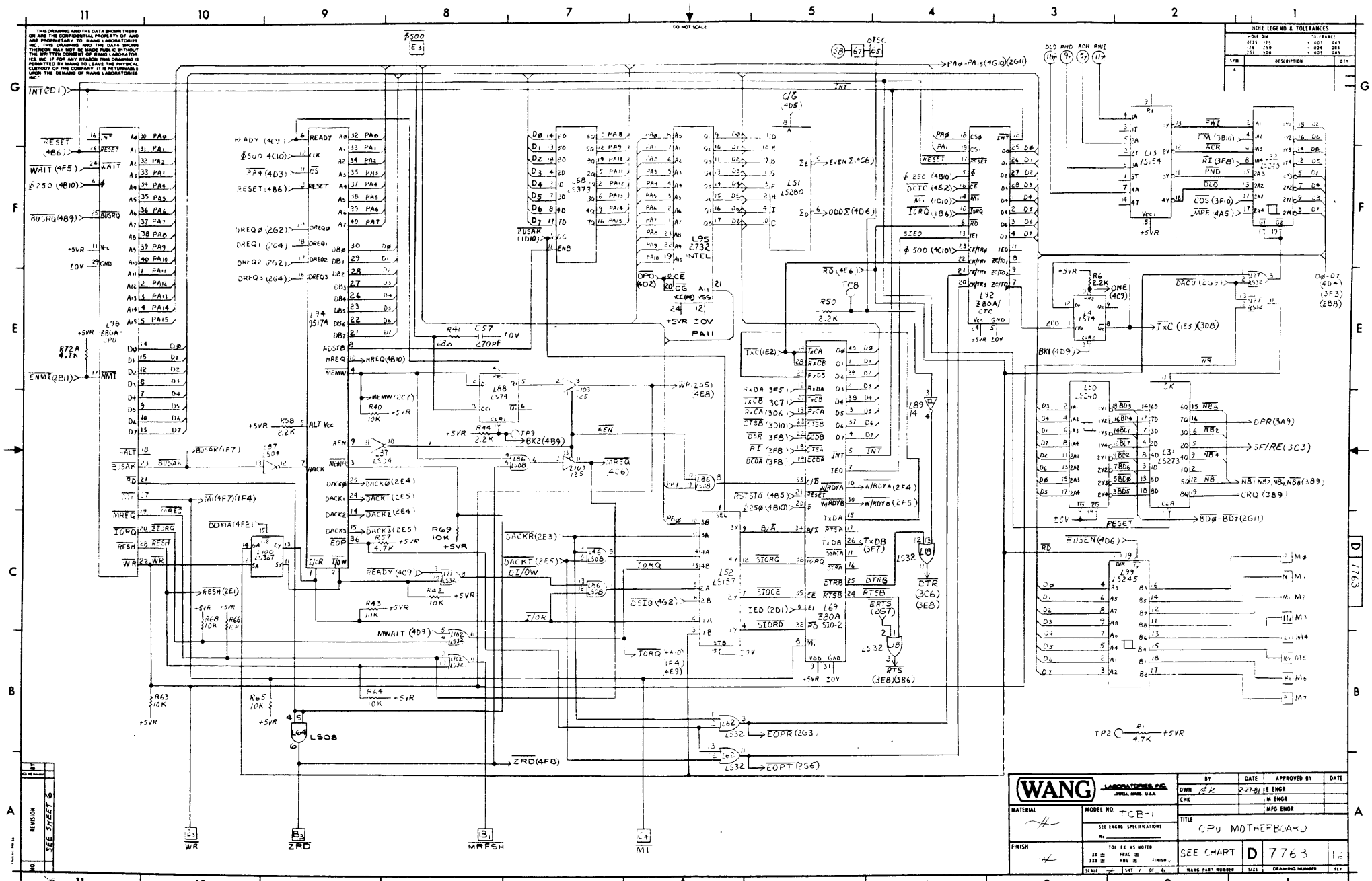
WANG LABORATORIES, INC.
LOWELL, MASS. U.S.A.
MODEL NO. TCB-1
CPU MOTHERBOARD
SEE CHART
D 7763
16
DRAWING NUMBER
SIZE
REV
DO NOT SCALE
HOLE LEGEND & TOLERANCES
L68 LS373
L95 2732 INTEL
L51 LS280
L94 8517A
L98 Z80A-CPU
L92 Z80A/CTC
L69 Z80A SIO-2
L52 LS157
L99 LS245
L50 LS240
L31 LS273
L13 LS154
L14 LS74
L87 LS04
L103 125
L186 LS08
L109 LS367
L62 LS32
L64 LS08
L89 LS14
L18 LS32
L102 LS32
L106 LS32
L171 LS32
L46 LS08
L86 LS08
L37 LS34
L107 LS04
L108 LS08
L32 LS32
L1 LS32
L2 LS32
L3 LS32
L4 LS32
L5 LS32
L6 LS32
L7 LS32
L8 LS32
L9 LS32
L10 LS32
L11 LS32
L12 LS32
L13 LS32
L14 LS32
L15 LS32
L16 LS32
L17 LS32
L18 LS32
L19 LS32
L20 LS32
L21 LS32
L22 LS32
L23 LS32
L24 LS32
L25 LS32
L26 LS32
L27 LS32
L28 LS32
L29 LS32
L30 LS32
L31 LS32
L32 LS32
L33 LS32
L34 LS32
L35 LS32
L36 LS32
L37 LS32
L38 LS32
L39 LS32
L40 LS32
L41 LS32
L42 LS32
L43 LS32
L44 LS32
L45 LS32
L46 LS32
L47 LS32
L48 LS32
L49 LS32
L50 LS32
L51 LS32
L52 LS32
L53 LS32
L54 LS32
L55 LS32
L56 LS32
L57 LS32
L58 LS32
L59 LS32
L60 LS32
L61 LS32
L62 LS32
L63 LS32
L64 LS32
L65 LS32
L66 LS32
L67 LS32
L68 LS32
L69 LS32
L70 LS32
L71 LS32
L72 LS32
L73 LS32
L74 LS32
L75 LS32
L76 LS32
L77 LS32
L78 LS32
L79 LS32
L80 LS32
L81 LS32
L82 LS32
L83 LS32
L84 LS32
L85 LS32
L86 LS32
L87 LS32
L88 LS32
L89 LS32
L90 LS32
L91 LS32
L92 LS32
L93 LS32
L94 LS32
L95 LS32
L96 LS32
L97 LS32
L98 LS32
L99 LS32
L100 LS32
L101 LS32
L102 LS32
L103 LS32
L104 LS32
L105 LS32
L106 LS32
L107 LS32
L108 LS32
L109 LS32
L110 LS32
L111 LS32
L112 LS32
L113 LS32
L114 LS32
L115 LS32
L116 LS32
L117 LS32
L118 LS32
L119 LS32
L120 LS32
L121 LS32
L122 LS32
L123 LS32
L124 LS32
L125 LS32
L126 LS32
L127 LS32
L128 LS32
L129 LS32
L130 LS32
L131 LS32
L132 LS32
L133 LS32
L134 LS32
L135 LS32
L136 LS32
L137 LS32
L138 LS32
L139 LS32
L140 LS32
L141 LS32
L142 LS32
L143 LS32
L144 LS32
L145 LS32
L146 LS32
L147 LS32
L148 LS32
L149 LS32
L150 LS32
L151 LS32
L152 LS32
L153 LS32
L154 LS32
L155 LS32
L156 LS32
L157 LS32
L158 LS32
L159 LS32
L160 LS32
L161 LS32
L162 LS32
L163 LS32
L164 LS32
L165 LS32
L166 LS32
L167 LS32
L168 LS32
L169 LS32
L170 LS32
L171 LS32
L172 LS32
L173 LS32
L174 LS32
L175 LS32
L176 LS32
L177 LS32
L178 LS32
L179 LS32
L180 LS32
L181 LS32
L182 LS32
L183 LS32
L184 LS32
L185 LS32
L186 LS32
L187 LS32
L188 LS32
L189 LS32
L190 LS32
L191 LS32
L192 LS32
L193 LS32
L194 LS32
L195 LS32
L196 LS32
L197 LS32
L198 LS32
L199 LS32
L200 LS32
L201 LS32
L202 LS32
L203 LS32
L204 LS32
L205 LS32
L206 LS32
L207 LS32
L208 LS32
L209 LS32
L210 LS32
L211 LS32
L212 LS32
L213 LS32
L214 LS32
L215 LS32
L216 LS32
L217 LS32
L218 LS32
L219 LS32
L220 LS32
L221 LS32
L222 LS32
L223 LS32
L224 LS32
L225 LS32
L226 LS32
L227 LS32
L228 LS32
L229 LS32
L230 LS32
L231 LS32
L232 LS32
L233 LS32
L234 LS32
L235 LS32
L236 LS32
L237 LS32
L238 LS32
L239 LS32
L240 LS32
L241 LS32
L242 LS32
L243 LS32
L244 LS32
L245 LS32
L246 LS32
L247 LS32
L248 LS32
L249 LS32
L250 LS32
L251 LS32
L252 LS32
L253 LS32
L254 LS32
L255 LS32
L256 LS32
L257 LS32
L258 LS32
L259 LS32
L260 LS32
L261 LS32
L262 LS32
L263 LS32
L264 LS32
L265 LS32
L266 LS32
L267 LS32
L268 LS32
L269 LS32
L270 LS32
L271 LS32
L272 LS32
L273 LS32
L274 LS32
L275 LS32
L276 LS32
L277 LS32
L278 LS32
L279 LS32
L280 LS32
L281 LS32
L282 LS32
L283 LS32
L284 LS32
L285 LS32
L286 LS32
L287 LS32
L288 LS32
L289 LS32
L290 LS32
L291 LS32
L292 LS32
L293 LS32
L294 LS32
L295 LS32
L296 LS32
L297 LS32
L298 LS32
L299 LS32
L300 LS32
L301 LS32
L302 LS32
L303 LS32
L304 LS32
L305 LS32
L306 LS32
L307 LS32
L308 LS32
L309 LS32
L310 LS32
L311 LS32
L312 LS32
L313 LS32
L314 LS32
L315 LS32
L316 LS32
L317 LS32
L318 LS32
L319 LS32
L320 LS32
L321 LS32
L322 LS32
L323 LS32
L324 LS32
L325 LS32
L326 LS32
L327 LS32
L328 LS32
L329 LS32
L330 LS32
L331 LS32
L332 LS32
L333 LS32
L334 LS32
L335 LS32
L336 LS32
L337 LS32
L338 LS32
L339 LS32
L340 LS32
L341 LS32
L342 LS32
L343 LS32
L344 LS32
L345 LS32
L346 LS32
L347 LS32
L348 LS32
L349 LS32
L350 LS32
L351 LS32
L352 LS32
L353 LS32
L354 LS32
L355 LS32
L356 LS32
L357 LS32
L358 LS32
L359 LS32
L360 LS32
L361 LS32
L362 LS32
L363 LS32
L364 LS32
L365 LS32
L366 LS32
L367 LS32
L368 LS32
L369 LS32
L370 LS32
L371 LS32
L372 LS32
L373 LS32
L374 LS32
L375 LS32
L376 LS32
L377 LS32
L378 LS32
L379 LS32
L380 LS32
L381 LS32
L382 LS32
L383 LS32
L384 LS32
L385 LS32
L386 LS32
L387 LS32
L388 LS32
L389 LS32
L390 LS32
L391 LS32
L392 LS32
L393 LS32
L394 LS32
L395 LS32
L396 LS32
L397 LS32
L398 LS32
L399 LS32
L400 LS32
L401 LS32
L402 LS32
L403 LS32
L404 LS32
L405 LS32
L406 LS32
L407 LS32
L408 LS32
L409 LS32
L410 LS32
L411 LS32
L412 LS32
L413 LS32
L414 LS32
L415 LS32
L416 LS32
L417 LS32
L418 LS32
L419 LS32
L420 LS32
L421 LS32
L422 LS32
L423 LS32
L424 LS32
L425 LS32
L426 LS32
L427 LS32
L428 LS32
L429 LS32
L430 LS32
L431 LS32
L432 LS32
L433 LS32
L434 LS32
L435 LS32
L436 LS32
L437 LS32
L438 LS32
L439 LS32
L440 LS32
L441 LS32
L442 LS32
L443 LS32
L444 LS32
L445 LS32
L446 LS32
L447 LS32
L448 LS32
L449 LS32
L450 LS32
L451 LS32
L452 LS32
L453 LS32
L454 LS32
L455 LS32
L456 LS32
L457 LS32
L458 LS32
L459 LS32
L460 LS32
L461 LS32
L462 LS32
L463 LS32
L464 LS32
L465 LS32
L466 LS32
L467 LS32
L468 LS32
L469 LS32
L470 LS32
L471 LS32
L472 LS32
L473 LS32
L474 LS32
L475 LS32
L476 LS32
L477 LS32
L478 LS32
L479 LS32
L480 LS32
L481 LS32
L482 LS32
L483 LS32
L484 LS32
L485 LS32
L486 LS32
L487 LS32
L488 LS32
L489 LS32
L490 LS32
L491 LS32
L492 LS32
L493 LS32
L494 LS32
L495 LS32
L496 LS32
L497 LS32
L498 LS32
L499 LS32
L500 LS32
L501 LS32
L502 LS32
L503 LS32
L504 LS32
L505 LS32
L506 LS32
L507 LS32
L508 LS32
L509 LS32
L510 LS32
L511 LS32
L512 LS32
L513 LS32
L514 LS32
L515 LS32
L516 LS32
L517 LS32
L518 LS32
L519 LS32
L520 LS32
L521 LS32
L522 LS32
L523 LS32
L524 LS32
L525 LS32
L526 LS32
L527 LS32
L528 LS32
L529 LS32
L530 LS32
L531 LS32
L532 LS32
L533 LS32
L534 LS32
L535 LS32
L536 LS32
L537 LS32
L538 LS32
L539 LS32
L540 LS32
L541 LS32
L542 LS32
L543 LS32
L544 LS32
L545 LS32
L546 LS32
L547 LS32
L548 LS32
L549 LS32
L550 LS32
L551 LS32
L552 LS32
L553 LS32
L554 LS32
L555 LS32
L556 LS32
L557 LS32
L558 LS32
L559 LS32
L560 LS32
L561 LS32
L562 LS32
L563 LS32
L564 LS32
L565 LS32
L566 LS32
L567 LS32
L568 LS32
L569 LS32
L570 LS32
L571 LS32
L572 LS32
L573 LS32
L574 LS32
L575 LS32
L576 LS32
L577 LS32
L578 LS32
L579 LS32
L580 LS32
L581 LS32
L582 LS32
L583 LS32
L584 LS32
L585 LS32
L586 LS32
L587 LS32
L588 LS32
L589 LS32
L590 LS32
L591 LS32
L592 LS32
L593 LS32
L594 LS32
L595 LS32
L596 LS32
L597 LS32
L598 LS32
L599 LS32
L600 LS32
L601 LS32
L602 LS32
L603 LS32
L604 LS32
L605 LS32
L606 LS32
L607 LS32
L608 LS32
L609 LS32
L610 LS32
L611 LS32
L612 LS32
L613 LS32
L614 LS32
L615 LS32
L616 LS32
L617 LS32
L618 LS32
L619 LS32
L620 LS32
L621 LS32
L622 LS32
L623 LS32
L624 LS32
L625 LS32
L626 LS32
L627 LS32
L628 LS32
L629 LS32
L630 LS32
L631 LS32
L632 LS32
L633 LS32
L634 LS32
L635 LS32
L636 LS32
L637 LS32
L638 LS32
L639 LS32
L640 LS32
L641 LS32
L642 LS32
L643 LS32
L644 LS32
L645 LS32
L646 LS32
L647 LS32
L648 LS32
L649 LS32
L650 LS32
L651 LS32
L652 LS32
L653 LS32
L654 LS32
L655 LS32
L656 LS32
L657 LS32
L658 LS32
L659 LS32
L660 LS32
L661 LS32
L662 LS32
L663 LS32
L664 LS32
L665 LS32
L666 LS32
L667 LS32
L668 LS32
L669 LS32
L670 LS32
L671 LS32
L672 LS32
L673 LS32
L674 LS32
L675 LS32
L676 LS32
L677 LS32
L678 LS32
L679 LS32
L680 LS32
L681 LS32
L682 LS32
L683 LS32
L684 LS32
L685 LS32
L686 LS32
L687 LS32
L688 LS32
L689 LS32
L690 LS32
L691 LS32
L692 LS32
L693 LS32
L694 LS32
L695 LS32
L696 LS32
L697 LS32
L698 LS32
L699 LS32
L700 LS32
L701 LS32
L702 LS32
L703 LS32
L704 LS32
L705 LS32
L706 LS32
L707 LS32
L708 LS32
L709 LS32
L710 LS32
L711 LS32
L712 LS32
L713 LS32
L714 LS32
L715 LS32
L716 LS32
L717 LS32
L718 LS32
L719 LS32
L720 LS32
L721 LS32
L722 LS32
L723 LS32
L724 LS32
L725 LS32
L726 LS32
L727 LS32
L728 LS32
L729 LS32
L730 LS32
L731 LS32
L732 LS32
L733 LS32
L734 LS32
L735 LS32
L736 LS32
L737 LS32
L738 LS32
L739 LS32
L740 LS32
L741 LS32
L742 LS32
L743 LS32
L744 LS32
L745 LS32
L746 LS32
L747 LS32
L748 LS32
L749 LS32
L750 LS32
L751 LS32
L752 LS32
L753 LS32
L754 LS32
L755 LS32
L756 LS32
L757 LS32
L758 LS32
L759 LS32
L760 LS32
L761 LS32
L762 LS32
L763 LS32
L764 LS32
L765 LS32
L766 LS32
L767 LS32
L768 LS32
L769 LS32
L770 LS32
L771 LS32
L772 LS32
L773 LS32
L774 LS32
L775 LS32
L776 LS32
L777 LS32
L778 LS32
L779 LS32
L780 LS32
L781 LS32
L782 LS32
L783 LS32
L784 LS32
L785 LS32
L786 LS32
L787 LS32
L788 LS32
L789 LS32
L790 LS32
L791 LS32
L792 LS32
L793 LS32
L794 LS32
L795 LS32
L796 LS32
L797 LS32
L798 LS32
L799 LS32
L800 LS32
L801 LS32
L802 LS32
L803 LS32
L804 LS32
L805 LS32
L806 LS32
L807 LS32
L808 LS32
L809 LS32
L810 LS32
L811 LS32
L812 LS32
L813 LS32
L814 LS32
L815 LS32
L816 LS32
L817 LS32
L818 LS32
L819 LS32
L820 LS32
L821 LS32
L822 LS32
L823 LS32
L824 LS32
L825 LS32
L826 LS32
L827 LS32
L828 LS32
L829 LS32
L830 LS32
L831 LS32
L832 LS32
L833 LS32
L834 LS32
L835 LS32
L836 LS32
L837 LS32
L838 LS32
L839 LS32
L840 LS32
L841 LS32
L842 LS32
L843 LS32
L844 LS32
L845 LS32
L846 LS32
L847 LS32
L848 LS32
L849 LS32
L850 LS32
L851 LS32
L852 LS32
L853 LS32
L854 LS32
L855 LS32
L856 LS32
L857 LS32
L858 LS32
L859 LS32
L860 LS32
L861 LS32
L862 LS32
L863 LS32
L864 LS32
L865 LS32
L866 LS32
L867 LS32
L868 LS32
L869 LS32
L870 LS32
L871 LS32
L872 LS32
L873 LS32
L874 LS32
L875 LS32
L876 LS32
L877 LS32
L878 LS32
L879 LS32
L880 LS32
L881 LS32
L882 LS32
L883 LS32
L884 LS32
L885 LS32
L886 LS32
L887 LS32
L888 LS32
L889 LS32
L890 LS32
L891 LS32
L892 LS32
L893 LS32
L894 LS32
L895 LS32
L896 LS32
L897 LS32
L898 LS32
L899 LS32
L900 LS32
L901 LS32
L902 LS32
L903 LS32
L904 LS32
L905 LS32
L906 LS32
L907 LS32
L908 LS32
L909 LS32
L910 LS32
L911 LS32
L912 LS32
L913 LS32
L914 LS32
L915 LS32
L916 LS32
L917 LS32
L918 LS32
L919 LS32
L920 LS32
L921 LS32
L922 LS32
L923 LS32
L924 LS32
L925 LS32
L926 LS32
L927 LS32
L928 LS32
L929 LS32
L930 LS32
L931 LS32
L932 LS32
L933 LS32
L934 LS32
L935 LS32
L936 LS32
L937 LS32
L938 LS32
L939 LS32
L940 LS32
L941 LS32
L942 LS32
L943 LS32
L944 LS32
L945 LS32
L946 LS32
L947 LS32
L948 LS32
L949 LS32
L950 LS32
L951 LS32
L952 LS32
L953 LS32
L954 LS32
L955 LS32
L956 LS32
L957 LS32
L958 LS32
L959 LS32
L960 LS32
L961 LS32
L962 LS32
L963 LS32
L964 LS32
L965 LS32
L966 LS32
L967 LS32
L968 LS32
L969 LS32
L970 LS32
L971 LS32
L972 LS32
L973 LS32
L974 LS32
L975 LS32
L976 LS32
L977 LS32
L978 LS32
L979 LS32
L980 LS32
L981 LS32
L982 LS32
L983 LS32
L984 LS32
L985 LS32
L986 LS32
L987 LS32
L988 LS32
L989 LS32
L990 LS32
L991 LS32
L992 LS32
L993 LS32
L994 LS32
L995 LS32
L996 LS32
L997 LS32
L998 LS32
L999 LS32
L1000 LS32

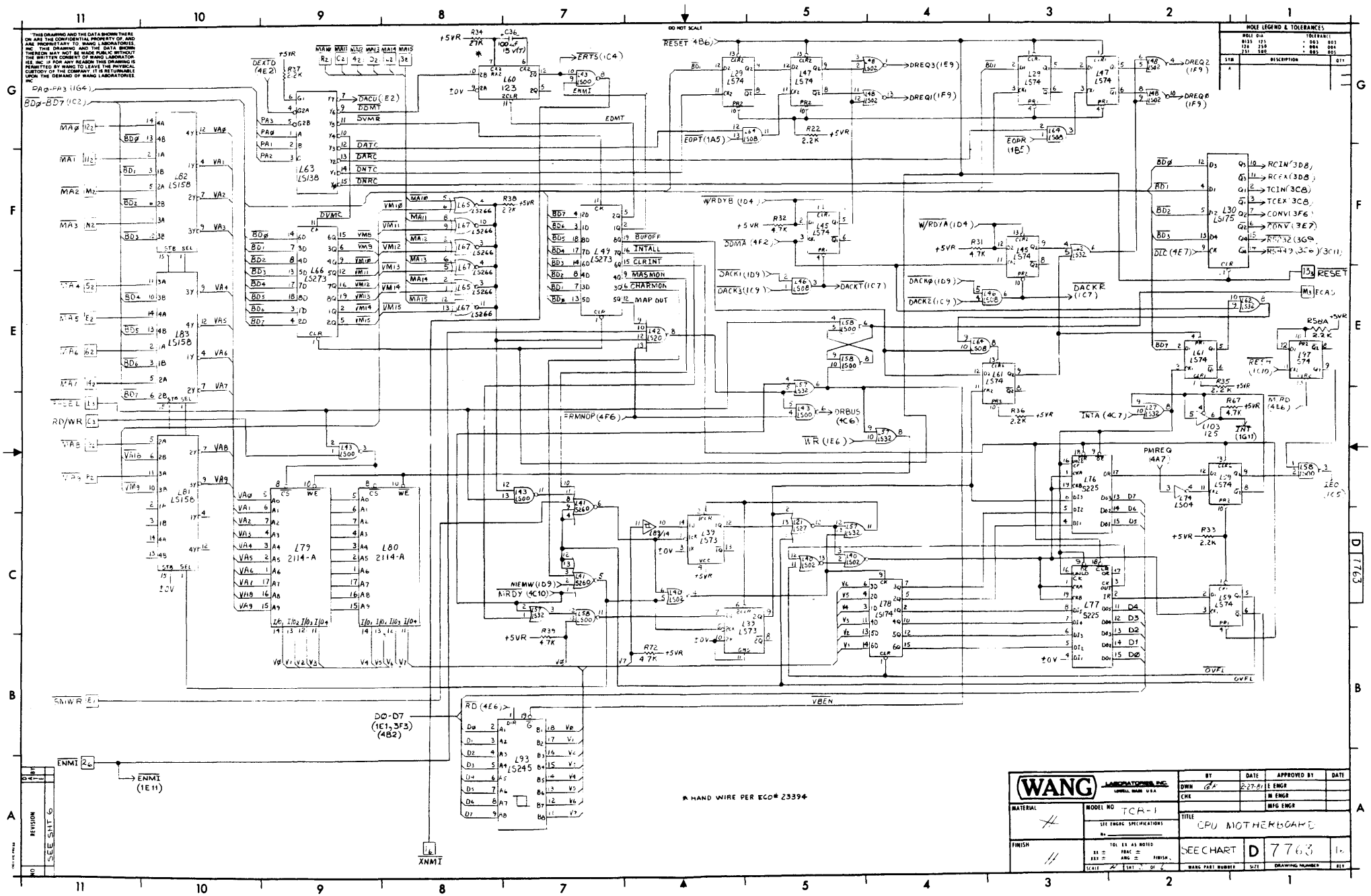
"THIS DRAWING AND THE DATA SHOWN THERE ON ARE THE CONFIDENTIAL PROPERTY OF, AND ARE PROPRIETARY TO, WANG LABORATORIES, INC. THIS DRAWING AND THE DATA SHOWN THEREON MAY NOT BE MADE PUBLIC WITHOUT THE WRITTEN CONSENT OF WANG LABORATORIES, INC. IF, FOR ANY REASON THIS DRAWING IS PERMITTED BY WANG TO LEAVE THE PHYSICAL CUSTODY OF THE COMPANY, IT IS RETURNABLE UPON THE DEMAND OF WANG LABORATORIES, INC."
DO NOT SCALE
HOLE LEGEND & TOLERANCES
SYM DESCRIPTION QTY
WANG LABORATORIES, INC. LOWELL MASS U.S.A.
MODEL NO TCR-1
SEE ENGRG SPECIFICATIONS
TITLE CPU MOTHERBOARD
DWN 2-27-81
SEE CHART D 7763
WANG PART NUMBER SIZE DRAWING NUMBER REV
* HAND WIRE PER ECO# 23394
L79 2114-A
L80 2114-A
L93 LS245
L66 LS273
L49 LS273
L30 LS175
L76 LS225
L77 LS225
L78 LS174
L39 LS73
L33 LS73
L60 123
L103 125
L63 LS138
L82 LS158
L83 LS158
L81 LS158
L65 LS266
L67 LS266
DO-D7 (1E1, 3F3) (4B2)
XNMI
ENMI (1E11)
SMWR (E1)
RD/WR (C3)
RESET (4B6)
EDMT
DACKT (1C7)
DREQ3 (1E9)
DREQ1 (1F9)
DREQ0 (1F9)
DREQ2 (1F9)
RCIN (3D8)
RCEX (3D8)
TCIN (3C8)
TCEX (3C8)
CONV (3F6)
TONV (3E7)
RS232 (3G9)
RS449 (3C6)/(3C11)
ECAS
DRBUS (4C6)
INTA (4C7)
PMREQ (4A7)
OVFL
VBEN
MRDY (4C10)
NIEMW (1D9)
ERMNOP (4F6)
WRDYB (1D4)
W/RDYA (1D4)
DOMA (4F2)
DACKR (1C7)
INT (1G11)
M RD (4E6)
IEO (1C5)
ERTS (1C4)
DEXTD (4E2)
DACD (E2)
DDMT
DVMR
DATC
DARC
DNTC
DNRC
DVMC
BUFOFF
INTALL
CLRINT
MASMON
CHARMON
MAP OUT
EOPT (1A5)
EOPR (1B5)
DACKT (1C7)

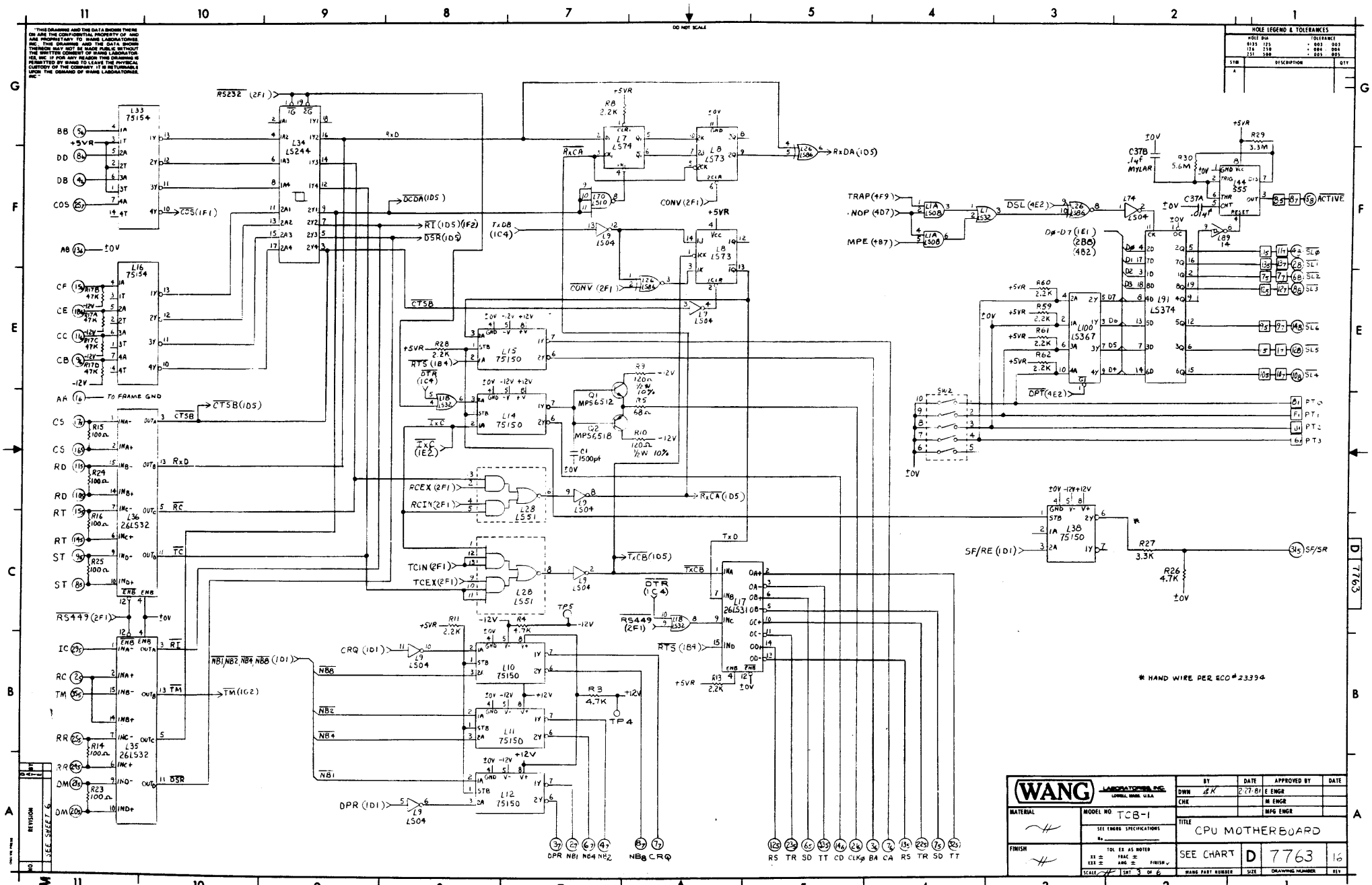
L33 75154
L34 LS244
L16 75154
L36 26LS32
L35 26LS32
L7 LS74
L8 LS73
L9 LS04
L10 75150
L11 75150
L12 75150
L15 75150
L14 75150
L28 LS51
L17 26LS31
L100 LS367
L91 LS374
L144 555
L38 75150
Q1 MPS6512
Q2 MPS6518
RS232 (2F1)
RS449 (2F1)
RxD
RxCA
RxDA (1D5)
DCDA (1D5)
RI (1D5) (1F2)
DSR (1D5)
CTSB
CTSB (1D5)
TxD
TxCB
TxCB (1D5)
RCEX (2F1)
RCIN (2F1)
TCIN (2F1)
TCEX (2F1)
CRQ (1D1)
DPR (1D1)
NB1, NB2, NB4, NB8 (1D1)
TM (1G2)
CONV (2F1)
TRAP (4F9)
NOP (4D7)
MPE (4B7)
DSL (4E2)
ACTIVE
D0-D7 (1E1) (2B8) (4B2)
SL0
SL1
SL2
SL3
SL4
SL5
SL6
PT0
PT1
PT2
PT3
SF/RE (1D1)
SF/SR
TO FRAME GND
DO NOT SCALE
* HAND WIRE PER ECO # 23394
WANG LABORATORIES, INC.
MODEL NO. TCB-1
TITLE CPU MOTHERBOARD
SEE CHART
D 7763 16
DRAWING NUMBER
SHT 3 OF 6

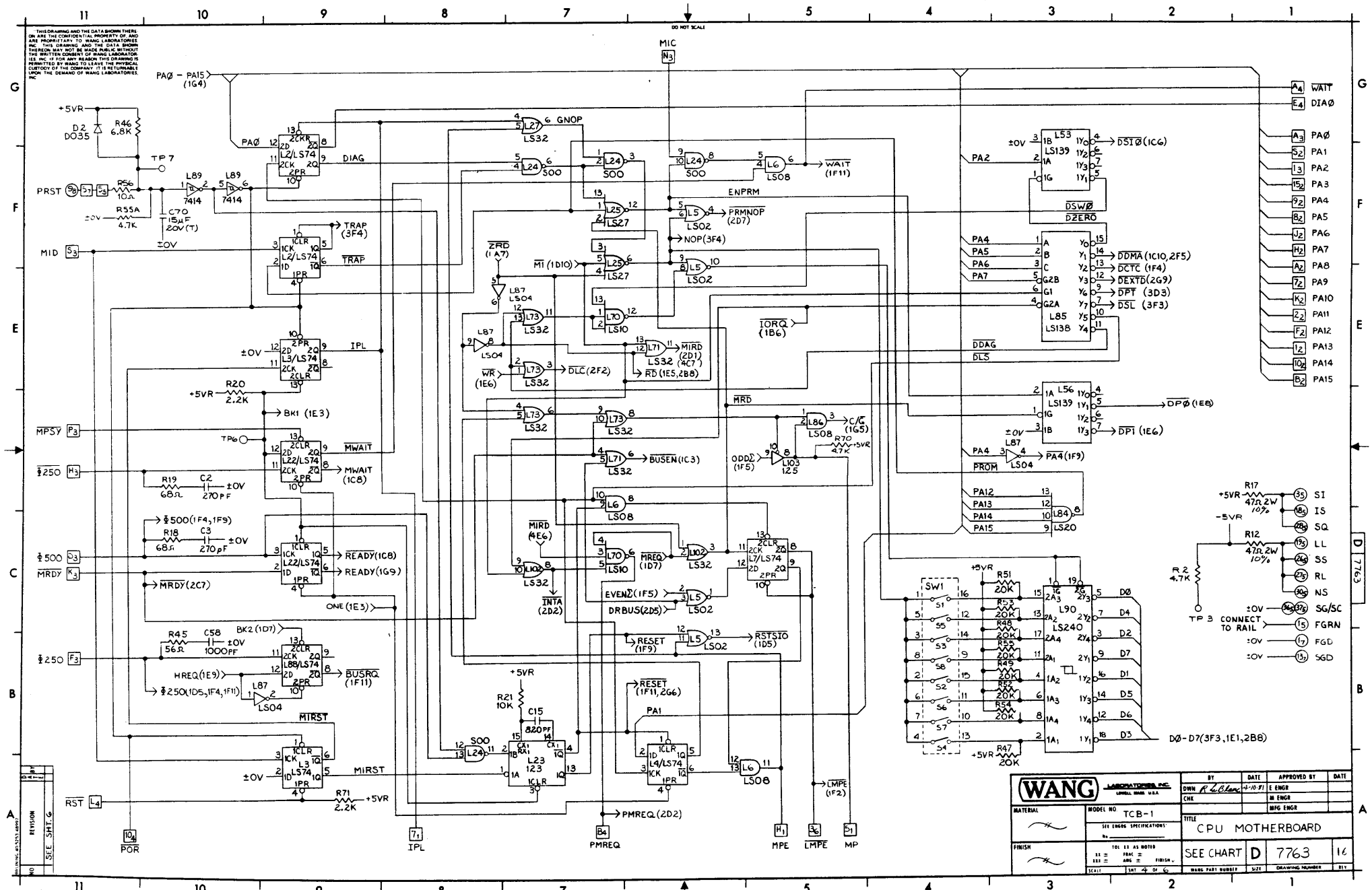
WANG LABORATORIES, INC.
MODEL NO TCB-1
TITLE CPU MOTHERBOARD
SEE CHART
D
7763
16
SHT 4 OF 6
DO NOT SCALE
PAØ – PA15 (1G4)
MIC
PRST
MID
MPSY
Φ250
Φ500
MRDY
RST
POR
IPL
PMREQ
MPE
LMPE
MP
WAIT
DIAØ
PA1
PA2
PA3
PA4
PA5
PA6
PA7
PA8
PA9
PA10
PA11
PA12
PA13
PA14
PA15
SI
IS
SQ
LL
SS
RL
NS
SG/SC
FGRN
FGD
SGD
DØ-D7(3F3,1E1,2B8)
CONNECT TO RAIL
TP 3
L53 LS139
L85 LS138
L56 LS139
L90 LS240
L23 123
L7/LS74
L4/LS74
L3/LS74
L22/LS74
L2/LS74
L88/LS74
L2/LS74
L87 LS04
L103 125
L84 LS20
L86 LS08
L71 LS32
L73 LS32
L70 LS10
L25 LS27
L24 LS00
L27 LS32
L6 LS08
L5 LS02
L102 LS32
L87 LS04
L89 7414
D2 DO35
R46 6.8K
R56 10Ω
R55A 4.7K
C70 15μF 20V (T)
R20 2.2K
R19 68Ω
C2 270pF
R18 68Ω
C3 270pF
R45 56Ω
C58 1000pF
R21 10K
C15 820pF
R71 2.2K
R17 47Ω 2W 10%
R12 47Ω 2W 10%
R2 4.7K
R51 20K
R47 20K
R70 4.7K
ZRD (1A7)
MI (1D10)
WR (1E6)
IORQ (1B6)
DDAG
DLS
MRD
MIRD (4E6)
MREQ (1D7)
EVENΣ (1F5)
DRBUS (2D5)
ODDΣ (1F5)
RESET (1F9)
RESET (1F11, 2G6)
RSTSTO (1D5)
BUSEN (1C3)
C/G (1G5)
DPØ (1E8)
DP1 (1E6)
PA4 (1F9)
DSIØ (1C6)
DDMA (1C10, 2F5)
DCTC (1F4)
DEXTD (2G9)
DPT (3D3)
DSL (3F3)
PRMNOP (2D7)
NOP (3F4)
WAIT (1F11)
TRAP (3F4)
DIAG
GNOP
ENPRM
IPL
BK1 (1E3)
MWAIT (1C8)
READY (1C8)
READY (1G9)
MRDY (2C7)
ONE (1E3)
BK2 (1D7)
HREQ (1E9)
BUSRQ (1F11)
MIRST
INTA (2D2)
DLC (2F2)
RD (1E5, 2B8)
MIRD (2D1) (4C7)
PA4 (1F9)
PROM
DSWØ
DZERO
TP7
TP6
TP3
DO NOT SCALE

THIS DRAWING AND THE DATA SHOWN THEREON ARE THE CONFIDENTIAL PROPERTY OF AND ARE PROPRIETARY TO WANG LABORATORIES INC. THIS DRAWING AND THE DATA SHOWN THEREON MAY NOT BE MADE PUBLIC WITHOUT THE WRITTEN CONSENT OF WANG LABORATORIES INC. IF FOR ANY REASON THIS DRAWING IS PERMITTED BY WANG TO LEAVE THE PHYSICAL CUSTODY OF THE COMPANY IT IS RETURNABLE UPON THE DEMAND OF WANG LABORATORIES INC.

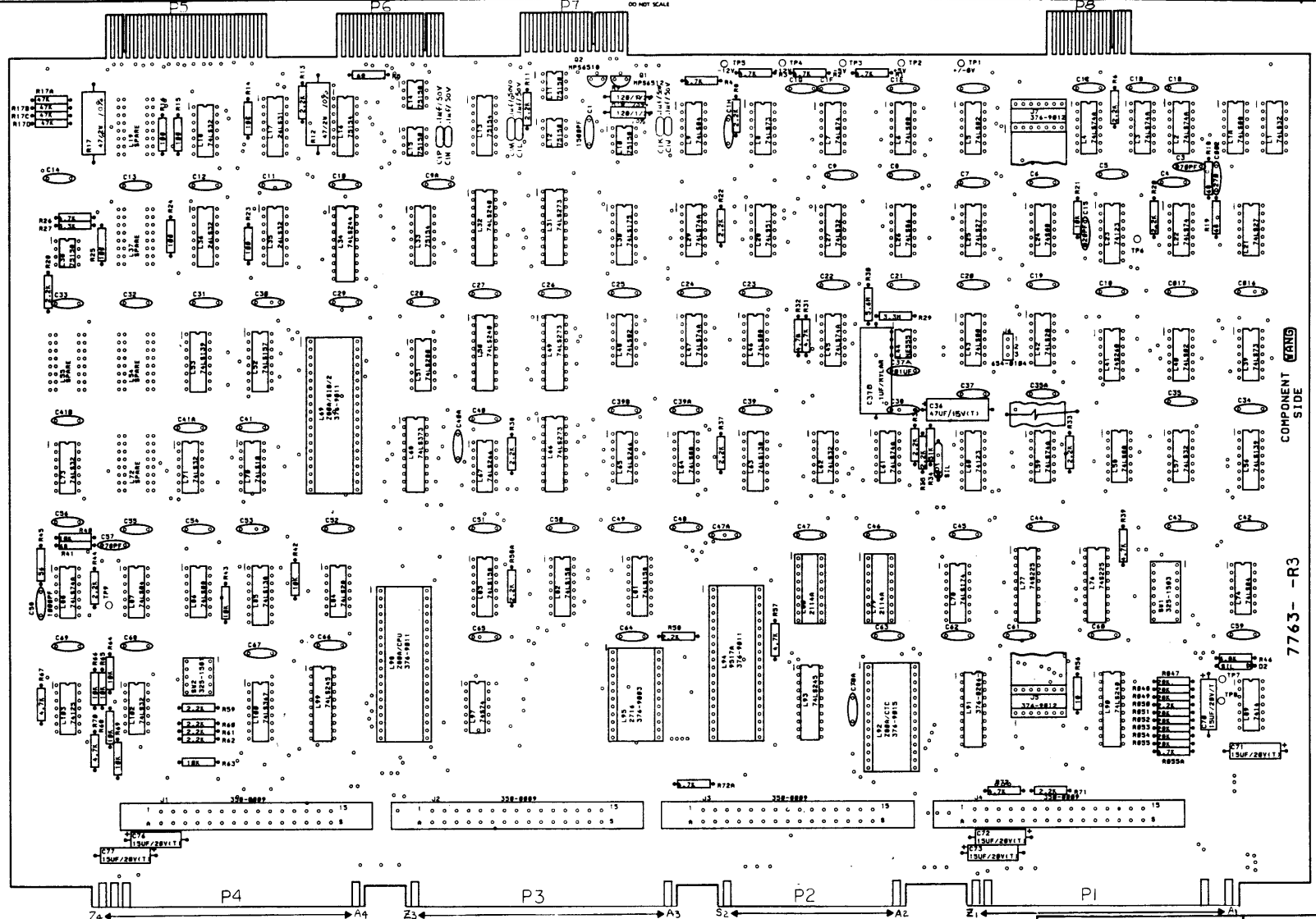

NOTES:

1. ALL CAPACITORS ARE .047µF CERAMIC EXCEPT AS NOTED.
2. L79 & L80 LOAD 18 PIN SOCKET 376-9014 (QTY. 2).
3. J1, J2, J3, & J4 ARE MOUNTED ON CIRCUIT SIDE.
4. TP1 THRU TP9 LOAD TERMINAL POST 654-1192 (QTY. 9).
5. ALL RESISTORS ARE 1/4W 10% EXCEPT WHERE NOTED.
6. J6 LOAD 3 PIN HEADER 654-0004. INSTALL 2 POS. SHUNT 350-4506 INTO HEADER.
7. J5 & J7 LOAD IC PAD 376-9008 (QTY. 2) UNDER 14 PIN SOCKET 376-9012 (QTY. 2).
8. ALL RESISTORS ARE 1/4W 5% UNLESS OTHERWISE SPECIFIED.

WANG LABORATORIES INC. LOWELL, MASS. U.S.A.	BY	DATE	APPROVED BY	DATE
DWN GR	4-2-81	E ENGR	
CHK		M ENGR	
		MFG ENGR	
MATERIAL	MODEL NO TCB-1	TITLE CPU MOTHER BOARD	
	SEE ENGRG SPECIFICATIONS No.		
FINISH	TOL EX AS NOTED .XX ± FRAC ± .XXX ± ANG ± FINISH ✓	SEE CHART	D	7763	16
	SCALE NA	SHT 5 OF 6	WANG PART NUMBER	SIZE	DRAWING NUMBER	REV

REVISION	
SEE SHEET 6	

"THIS DRAWING AND THE DATA SHOWN THERE ON ARE THE CONFIDENTIAL PROPERTY OF AND ARE PROPRIETARY TO WANG LABORATORIES INC. THIS DRAWING AND THE DATA SHOWN THERE ON MAY NOT BE REPRODUCED OR THE INFORMATION CONSERT OF WANG LABORATORIES INC. IF FOR ANY REASON THIS DRAWING IS PERMITTED BY WANG TO LEAVE THE PHYSICAL CUSTODY OF THE COMPANY, IT IS RETURNABLE UPON THE DEMAND OF WANG LABORATORIES INC."

LOCATION	TYPE	W.L. PART NO.
L19,20, 37,54,55,72, 101	SPARE	
L2,3,4,7,22,29,45,47, 59,61,88	74LS74A	376-0155
L5,40,48	74LS02	376-0208
L6,46,64,86,1A	74LS08	376-0153
L8,39	74LS73	376-0304
L9,87,74	74LS04	376-0180
L10,11,12,14,15,38	75150	376-0076
L13,16,33	75154	376-0077
L17	26LS31	376-0470
L18,27, 57,62,71, 73,102,1	74LS32	376-0211
L23,60	74123	376-0080
L24	74S00	376-0228
L25,21	74LS27	376-0245
L26	74LS86	376-0231
L28	74LS51	376-0213
L30	74LS175	376-0160
L31,49,66	74LS273	376-0302
L32,50,90	74LS240	376-0297
L34	74LS244	376-0288
L42,84	74LS20	376-0210
L43,58	74LS00	376-0207
L44	NE555	376-0126
L51	74LS280	376-0242
L52	74LS157	376-0216
L53,56	74LS139	376-0226
L63,85	74LS138	376-0294
L65,67	74LS266	376-0148
L69	Z80A-SIO/2	SEE CHART
L70	74LS10	376-0209
L76,77	74S225	376-0323
L78	74LS174	376-0159
L79,80	2114A	SEE CHART
L81,82,83	74LS158	376-0293
L89	7414	376-0139
L91	74LS374	376-0286
L92	Z80A/CTC	SEE CHART
L93,99	74LS245	376-0285
L94	AM9517A	SEE CHART
L95	2732	SEE CHART
L98	Z80A-CPU	SEE CHART
L100	74LS367	376-0192
L103	74125	376-0324
L97	74S74	376-0202
L41	74S260	376-0206
L35,36	26LS32	376-0471
L68	74LS373	376-0310

210 = 209 + 377 OR 378

210	209	L69	L79,80	L92	L94	L95		L98
7763-A	7763	377-0393	377-0391 L	377-0371	337-0388	378-6004-R1		377-0368

COMPONENT	TYPE	W.L. PART NO.
R45	56Ω ¼W 5%	330-1057
R21,63-66,40,42, 43,68,69	10K ¼W 5%	330-4010
R1-4,26,31,32,39, 57,67,70,72,72A	4.7K ¼W 5%	330-3048
R5,18,19,41	68Ω ¼W 5%	330-1069
50, R6,8,11,13,2022,28, 50A, 33,35-38,44,58-62,71	2.2K ¼W 5%	330-3023
R9,10	120Ω ½W 10%	331-2012
R12,17	47Ω 2W 10%	337-1047
R14-16,23-25	100Ω ¼W 5%	330-2011
R27	3.3K ¼W 5%	331-3034
R29	3.3M ¼W 5%	330-6034
R30	5.6M ¼W 5%	330-6057
R34	27K ¼W 5%	330-4028
R46	6.8K ¼W 5%	330-3069
R47-49,51-55,	20K ¼W 5%	330-4021
R56	10Ω ¼W 5%	330-1011
R17A,17B,17C,17D	47K ¼W 5%	330-4047
C1	1500pf 500V	300-1907
C58	1000pf 500V	300-1906
C3,57,58,2	270pf 500V	300-1270
C1A-C1H,4-14,C9A,16-35,35A37-56,39A,39B,40A,41A,41B,70A, 59-69	.047μf 50V	300-1966
C15	820pf 500V	300-1820
C36	100μf 15V (T)	300-4021
C70-73,76,77	15μf 20V (T)	300-4022
C37A	.01μf 25V	300-1903
C37B	.1μf 100V (M)	300-2212
R55A	4.7K ¼W 5%	330-3048
Q1	MPS6512	375-1012
Q2	MPS6518	375-1014
D2	SIL	380-1001
SW1	8 BANK ROCKER SW	325-1503
SW2	#5 STUD DIG SW	325-9005
L92	28 PIN SKT	376-9015
L69,94,98	40 PIN SKT	376-9011
L95	24 PIN SKT	376-9003
J1,2,3,4	30 PIN CONN	350-0009
L79,80	18 PIN SKT	376-9014
J5,7	14 PIN SKT	376-9012
	16 PIN IC PAD	376-9008

LOCATION	TYPE	SPARES
74LS02	L40	1
74LS08	L1A	2
	L6	1
	L46	1
7414	L89	1
74LS20	L42	1
74LS20	L84	1
74LS32	L2	3
74LS32	L71	1
74123	L23	1
74123	L60	1
74LS139	L53	1
74LS139	L56	1
74LS27	L21	2
74LS27	L25	1
74LS86	L26	1
74LS04	L74	4
74S74	L97	1
74LS266	L65	1

COMPONENT	TYPE	W.L. PART NO.
J6	3 PIN HEADER	654-0104
	2 POS SHUNT	350-4506
C1J,1K,1L,1M,1N,1P	.1μf 50V	300-1930

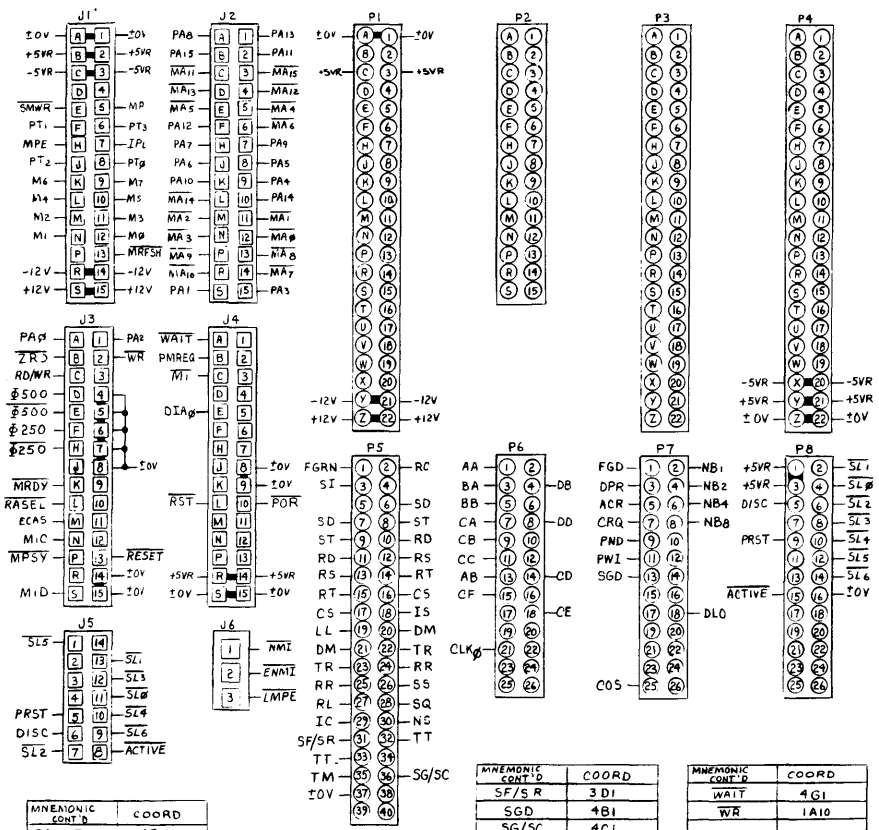

MNEMONIC CONT'D	COORD
PAØ-PA15	4F1
PMREQ	4A7
PND	1G3
POR	4A11
PTØ-PT3	3D1
PRST	4F11
PWI	1G3
RASEL	2D11
RC	3B11
RD	3D11
RD/WR	2D11
RL	4C1
RR	3A11
RS	3A5
RST	4A11
RT	3C11
RESET	2E1
SD	3A5

MNEMONIC CONT'D	COORD
SF/SR	3D1
SGD	4B1
SG/SC	4C1
SI	4D1
SLØ-SL6	3E1
SMWR	2B11
SQ	4C1
SS	4C1
ST	3C11
TM	3B11
TR	3A5
TT	3A5

MNEMONIC CONT'D	COORD
WAIT	4G1
WR	1A10
ZRD	1A9
Φ250	4B11
Φ250	4D11
Φ500	4C11
Φ500	1G8

MNEMONIC	COORD
AA	3D11
AB	3F11
ACR	1G3
ACTIVE	3F1
BA	3A4
BB	3G11
CA	3A4
CB	3E11
CC	3E11
CD	3A5
CE	3E11
CF	3E11
CLKØ	3A5
COS	3F11
CRQ	3A6
CS	3D11
DB	3F11
DD	3F11
DIAØ	4G1
DISC	1G4
DLO	1G3
DM	3A11
DPR	3A7
ECAS	2E1
ENMI	2A11
FGD	4B1
FGRN	4C1
MAIO-MA15	2G9
IC	3B11
IPL	4A8
IS	4C1
LL	4C1
LMPE	4A5
MI	1A6
MAØ-MA9	2G11
MIC	4G6
MID	4F11
MØ-M7	1C1
MP	4A4
MPE	4A5
MPSY	4D11
MRDY	4C11
MRFSH	1A8
NB1	3A7
NB2	3A7
NB4	3A7
NB8	3A7
NS	4C1
NMI	2A8

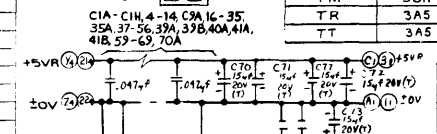

E-REV 5

REV	BY	DATE	APPROVED BY	DATE
DWN	JK	2/27/81	E ENGR	
CHK			M ENGR	
			MFG ENGR	

WANG LABORATORIES, INC. LOWELL, MASS. U.S.A.

MATERIAL: —

FINISH: —

MODEL NO. TCB-1

SEE ENGRG SPECIFICATIONS No.

TOL EX AS NOTED: XX ± FRAC ±, XXX ± ANG ±, FINISH

SCALE — SHT 6 OF 6

TITLE: CPU MOTHERBOARD

WANG PART NUMBER: SEE CHART | SIZE: D | DRAWING NUMBER: 7763 | REV: C

D 7763

THIS DRAWING AND THE DATA SHOWN THEREON ARE THE CONFIDENTIAL PROPERTY OF AND ARE PROPRIETARY TO WANG LABORATORIES, INC. THIS DRAWING AND THE DATA SHOWN THEREON MAY NOT BE MADE PUBLIC WITHOUT THE WRITTEN CONSENT OF WANG LABORATORIES, INC. IF FOR ANY REASON THIS DRAWING IS PERMITTED BY WANG TO LEAVE THE PHYSICAL CUSTODY OF THE COMPANY, IT IS RETURNABLE UPON THE DEMAND OF WANG LABORATORIES, INC.

DO NOT SCALE

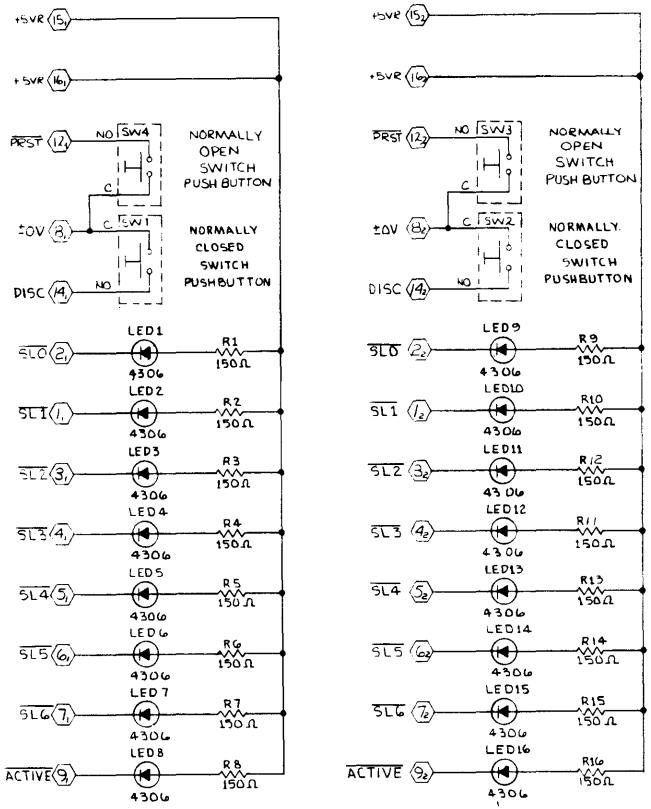

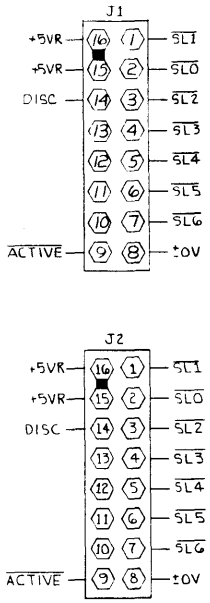

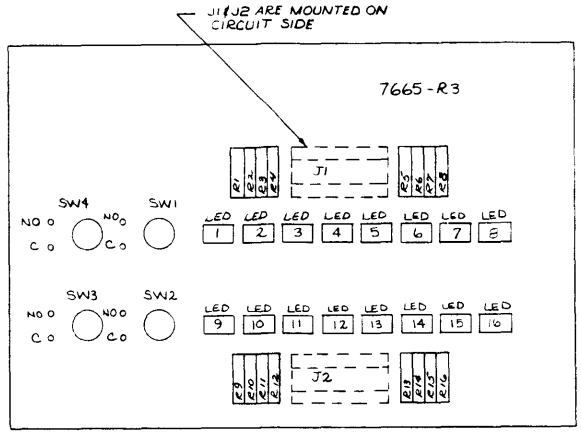

MNEMONIC	CO'ORD
ACTIVE	C11, C9
DISC	E11, E9
SL0	E11, E9
SL1	E11, E9
SL2	D11, D9
SL3	D11, D9
SL4	D11, D9
SL5	C11, C9
SL6	C11, C9

COMPONENT	TYPE	W.L PART NO.
R1-16	150Ω 10% 1/4W	330-2015-48
LED1-16	4306 2.5V (RED)	370-0031
J1,2	16 PIN CAMBION SOCKET	376-9005
SW1,2,3,4	PUSH BUTTON SWITCH	279-0300

NO	REVISION	BY	DATE	KM
0	ORIGINATED PER DWR#865 APP'D:		3-20-80	10-14-80
1	REVISED PER ECN#15639 APP'D:			10/9/81
2	REVISED PER ECO#20292 APP'D:			

E-REV [0]

WANG LABORATORIES, INC. LOWELL, MASS. U.S.A.	BY	DATE	APPROVED BY	DATE
	DWN S. DOB.	3-20-80	E ENGR	4/9/80
	CHK	4/7/83	M ENGR	
			MFG ENGR	

MATERIAL

MODEL NO. TCB-1

SEE ENGRG SPECIFICATIONS No.

FINISH

TOL EX AS NOTED

TITLE LIGHT BOARD

WANG PART NUMBER	SIZE	DRAWING NUMBER	REV
210-7665	D	7665	2

SCALE — SHT 1 OF 1

7665

"THIS DRAWING AND THE DATA SHOWN THEREON ARE THE CONFIDENTIAL PROPERTY OF AND ARE PROPRIETARY TO WANG LABORATORIES, INC. THIS DRAWING AND THE DATA SHOWN THEREON MAY NOT BE MADE PUBLIC WITHOUT THE WRITTEN CONSENT OF WANG LABORATORIES, INC. IF FOR ANY REASON THIS DRAWING IS PERMITTED BY WANG TO LEAVE THE PHYSICAL CUSTODY OF THE COMPANY, IT IS RETURNABLE UPON THE DEMAND OF WANG LABORATORIES, INC."

DO NOT SCALE

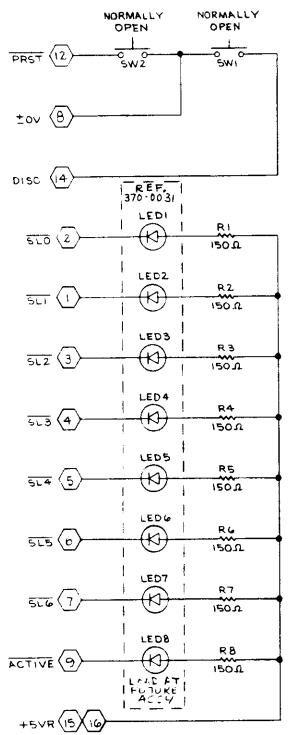

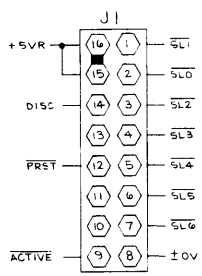

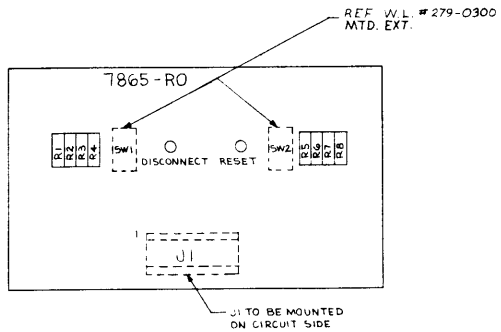

MNEMONICS	COOR'D
ACTIVE	1C11
DISC	1F11
PRST	1F11
SL0 - SL6	1E11
±0V	1F11
+5VR	1C11

COMPONENT	TYPE	W.L. PART NO.
R1-8	150Ω 10% 1/4W	330-2015
J1	16 PIN SOCKET	376-9005

E-REV 0

NO	REVISION	BY	DATE
0	ORIGINATED P.C.		
	DWN WKOT	LKB	11-5-80
	APPD. 9711	FSD	11-18-81
	REVISED PER ECO #9579		
	REVISED PER ECO #9711		

WANG LABORATORIES, INC. LOWELL MASS U.S.A.

	BY	DATE	APPROVED BY	DATE
DWN	L. B.	11/5/80	E ENGR	
CHK			M ENGR	
			MFG ENGR	

MATERIAL —

MODEL NO TCB-1

SEE ENGRG SPECIFICATIONS No.

FINISH —

TOL IS AS NOTED

TITLE LIGHT BOARD

WANG PART NUMBER 210-7865 | SIZE D | DRAWING NUMBER 7865 | REV 1

D 7865

THIS DRAWING AND THE DATA SHOWN THEREON ARE THE CONFIDENTIAL PROPERTY OF AND ARE PROPRIETARY TO WANG LABORATORIES INC. THIS DRAWING AND THE DATA SHOWN THEREON MAY NOT BE MADE PUBLIC WITHOUT THE WRITTEN CONSENT OF WANG LABORATORIES, INC. IF FOR ANY REASON THIS DRAWING IS PERMITTED BY WANG TO LEAVE THE PHYSICAL CUSTODY OF THE COMPANY, IT IS RETURNABLE UPON THE DEMAND OF WANG LABORATORIES, INC.

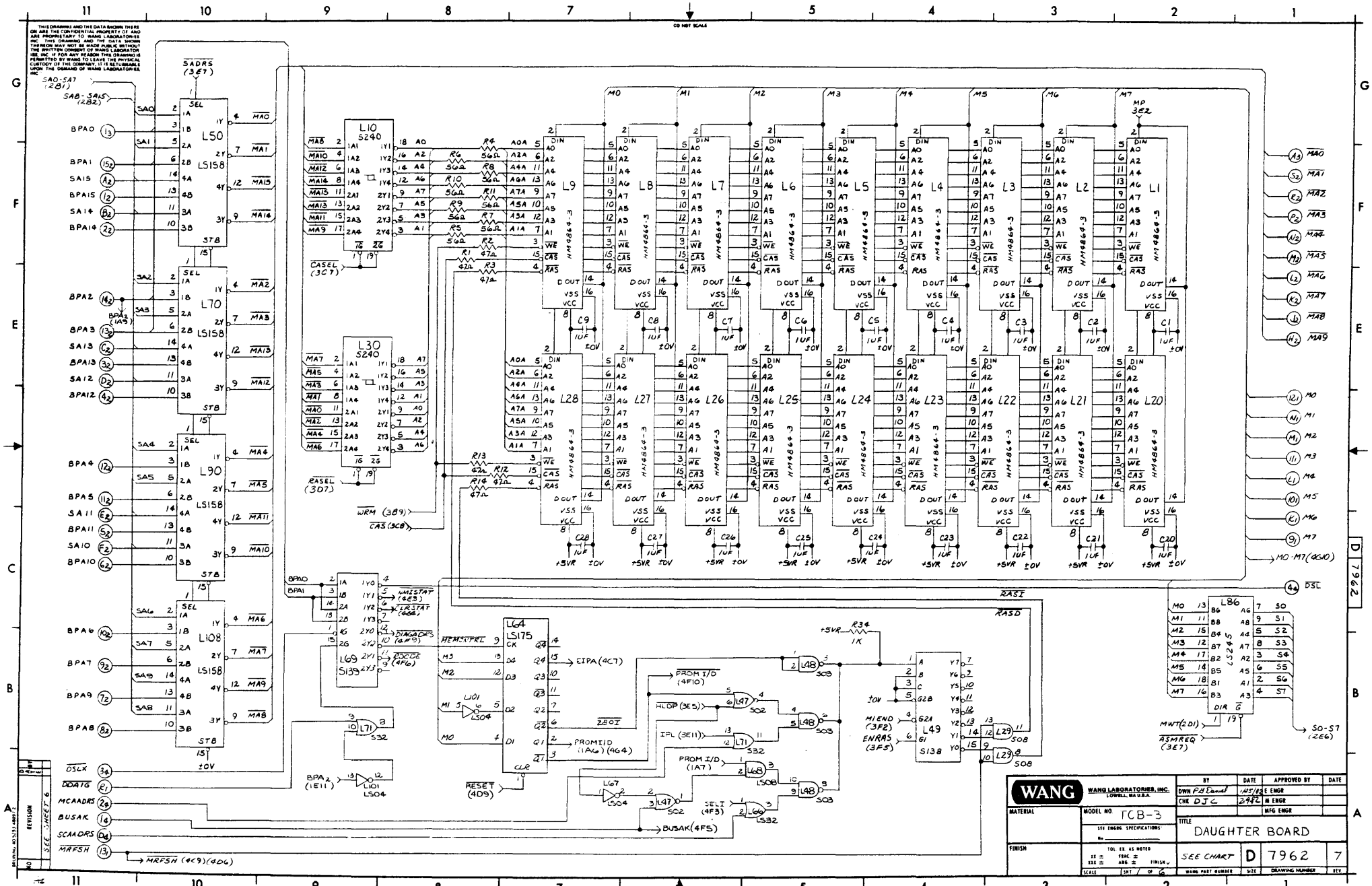

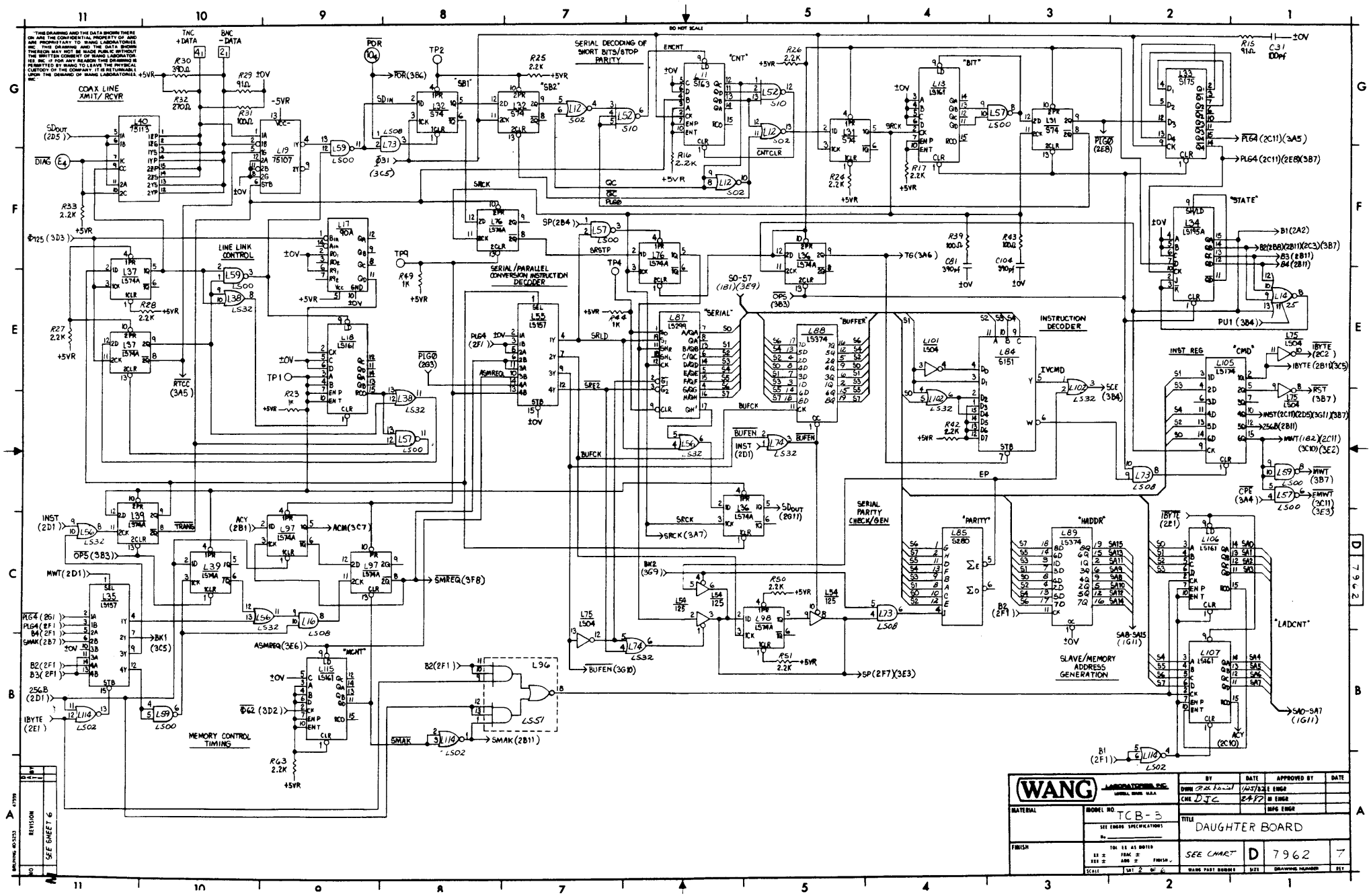
COAX LINE XMIT/RCVR
SERIAL DECODING OF SHORT BITS/STOP PARITY
LINE LINK CONTROL
SERIAL/PARALLEL CONVERSION INSTRUCTION DECODER
"SERIAL"
"BUFFER"
INSTRUCTION DECODER
"STATE"
INST REG
"CMD"
SERIAL PARITY CHECK/GEN
"PARITY"
"HADDR"
SLAVE/MEMORY ADDRESS GENERATION
"LADCNT"
"MCNT"
MEMORY CONTROL TIMING
WANG LABORATORIES, INC.
TCB-3
DAUGHTER BOARD
SEE CHART
D
7962
7

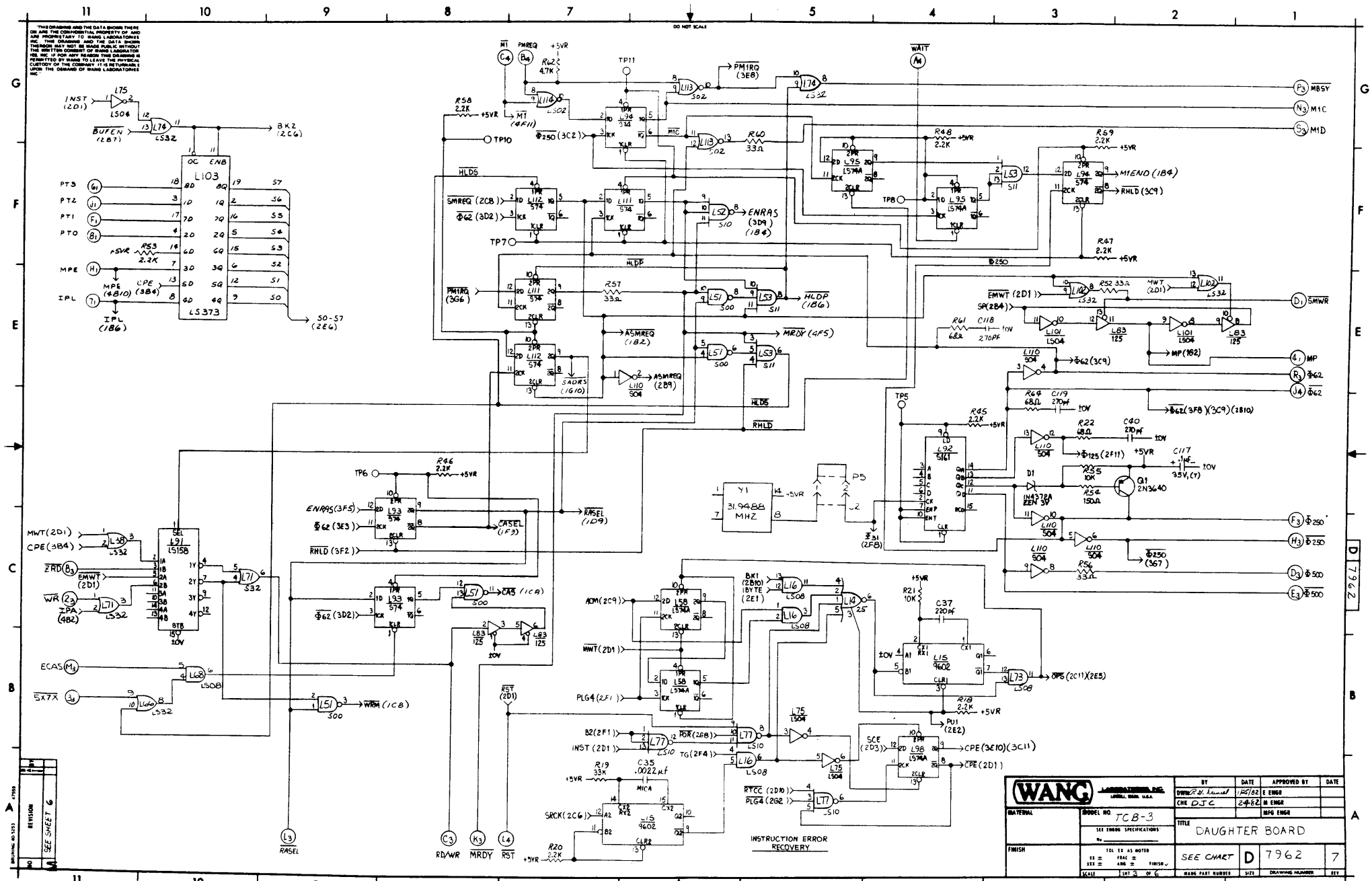
DO NOT SCALE
L103
LS373
Y1
31.9488 MHZ
INSTRUCTION ERROR RECOVERY
WANG LABORATORIES, INC.
DRAWN R.H. Kenel 1/25/82
CHK D.J.C. 2-4-82
TITLE DAUGHTER BOARD
MODEL NO TCB-3
SEE CHART D 7962 7
SHT 3 OF 6
SEE SHEET 6

"THIS DRAWING AND THE DATA SHOWN THEREON ARE THE CONFIDENTIAL PROPRIETY OF AND ARE PROPRIETARY TO WANG LABORATORIES, INC. THIS DRAWING AND THE DATA SHOWN THEREON MAY NOT BE MADE PUBLIC WITHOUT THE WRITTEN CONSENT OF WANG LABORATORIES, INC. IF FOR ANY REASON THIS DRAWING IS PERMITTED BY WANG TO LEAVE THE PHYSICAL CUSTODY OF THE COMPANY, IT IS RETURNABLE UPON THE DEMAND OF WANG LABORATORIES, INC."

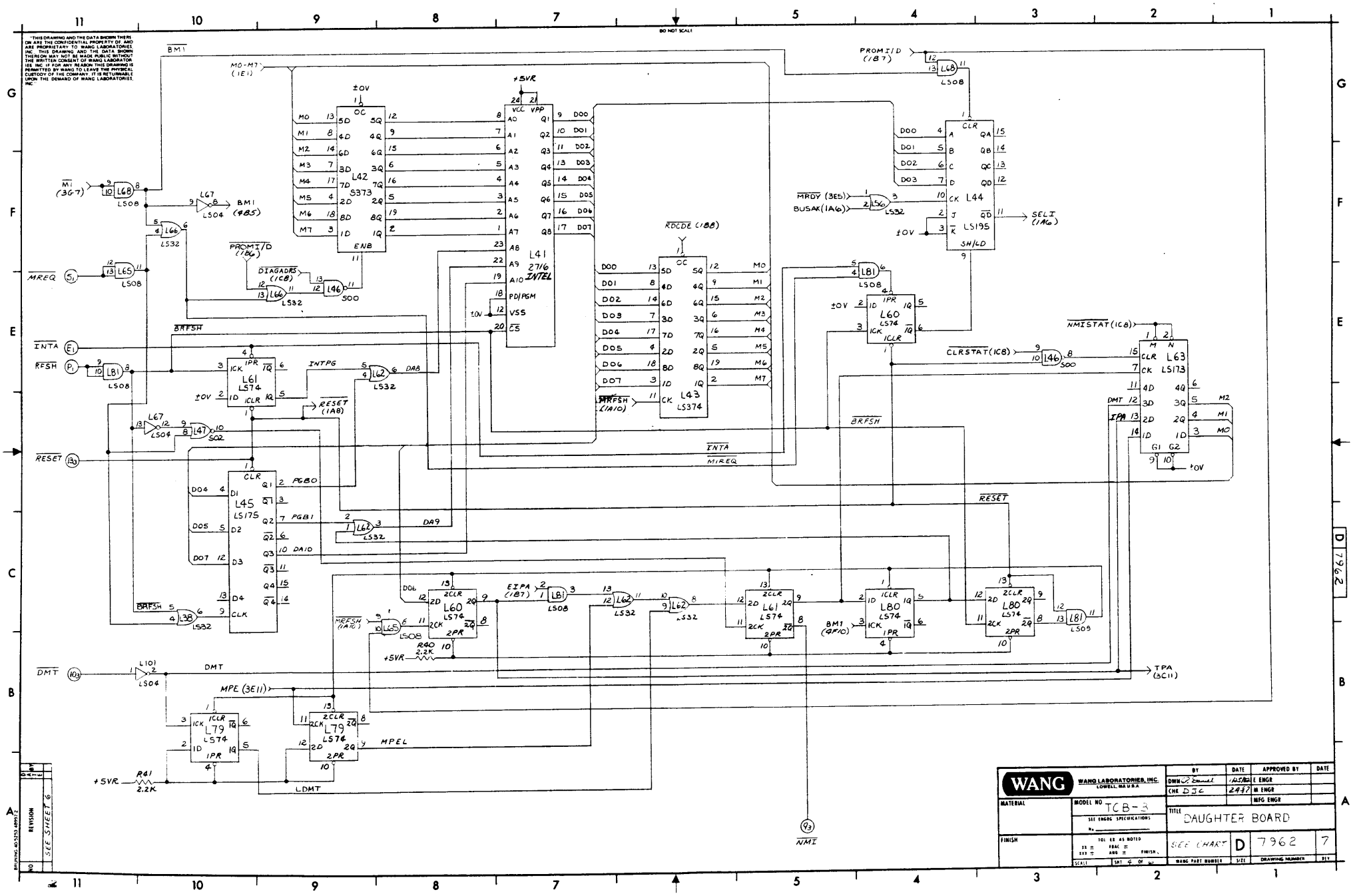

WANG	WANG LABORATORIES, INC. LOWELL, MASS. U.S.A.	BY	DATE	APPROVED BY	DATE
		DWN		E ENGR	
		CHK DJC	2-4-77	M ENGR	
				MFG ENGR	
MATERIAL	MODEL NO TCB-3	TITLE DAUGHTER BOARD			
	SEE ENGRG SPECIFICATIONS No.				
FINISH	TOL EX AS NOTED .XX ± FRAC ± .XXX ± ANG ± FINISH	SEE CHART	D	7962	7
	SCALE SHT 4 OF	WANG PART NUMBER	SIZE	DRAWING NUMBER	REV

REVISION	BY	DATE
NO	SEE SHEET 6	

DRAWING 40-5753-4 REV 12

D 7962

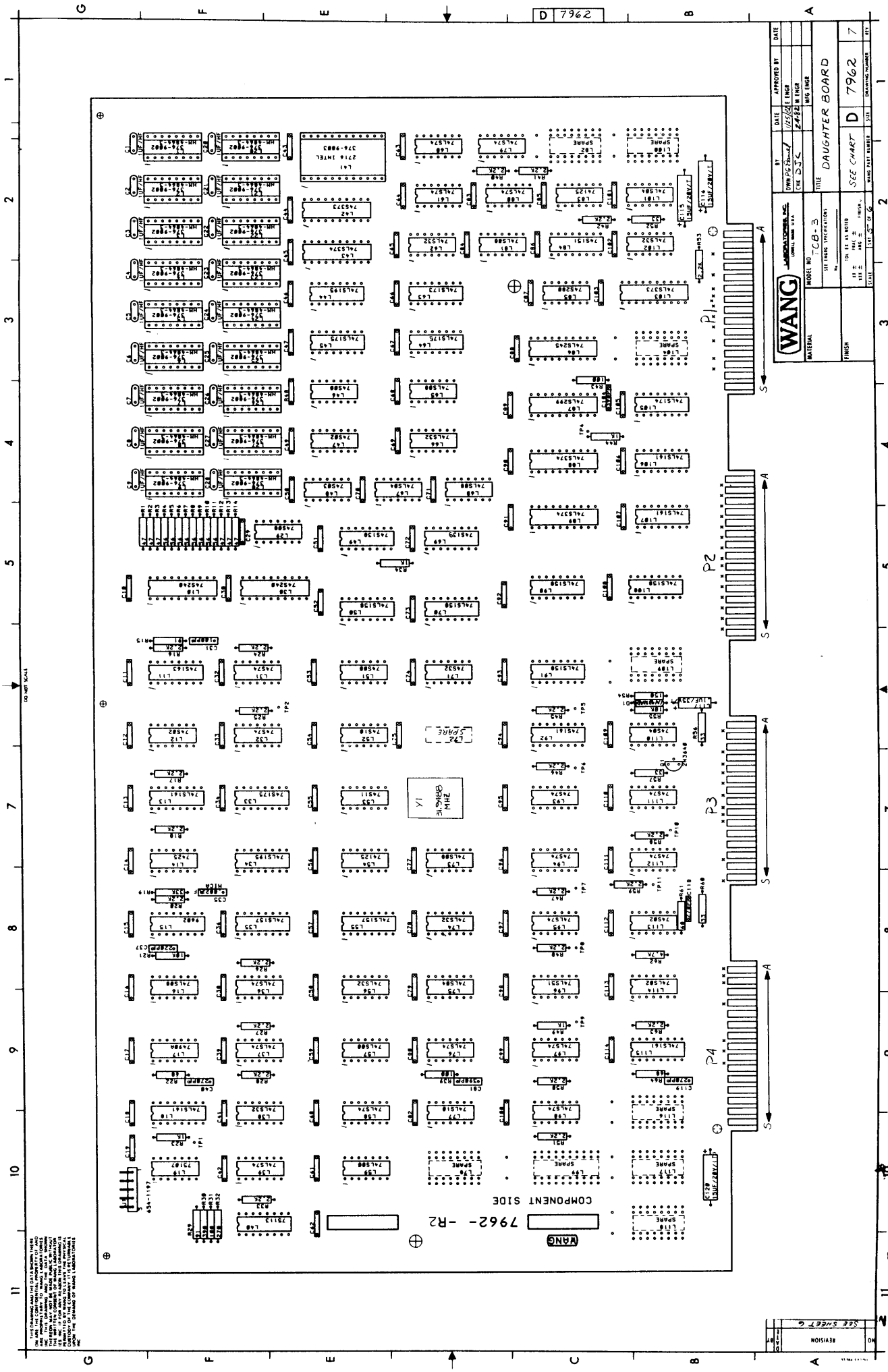
D 7962
WANG
DAUGHTER BOARD
SEE CHART
D
7962
7
P1
P2
P3
P4
COMPONENT SIDE
7962- -R2
SEE SHEET 6

THIS DRAWING AND THE DATA SHOWN THEREON ARE THE CONFIDENTIAL PROPERTY OF AND ARE PROPRIETARY TO WANG LABORATORIES INC. THIS DRAWING AND THE DATA SHOWN THEREON MAY NOT BE MADE PUBLIC WITHOUT THE WRITTEN CONSENT OF WANG LABORATORIES INC. OR ANY REASON THIS DRAWING IS PERMITTED BY WANG TO LEAVE THE PHYSICAL CUSTODY OF THE COMPANY, IT IS RETURNABLE UPON THE DEMAND OF WANG LABORATORIES INC.

DO NOT SCALE

I.C. LOCATION	TYPE	W.L. PART NO.
L1-9, 20-28	HM4864-3	SEE CHART
L10, 33	74S240	376-0334
L12	74S163	376-0235
L42, 47, 113	74S02	376-0199
L13, 8, 86, 107, 115	74LS161	376-0233
L14	7425	376-0092
L15	9602	376-0104
L16, 65, 68, 73, 81	74LS08	376-0153
L17	7490A	376-0073
L19	75107	376-0146
L29	74S08	376-0200
L31, 32, 93, 94, 111, 112	74S74	376-0202
L33	74S175	376-0270
L34, 44	74LS195A	376-0248
L35, 55	74LS157	376-0216
L36, 37, 39, 58, 60, 61, 76, 79, 80, 95, 97, 98	74LS74	376-0155
L38, 56, 62, 66, 74, 102	74LS32	376-0211
L40	75113	376-0256
L41	2716	SEE CHART
L42	74S373	376-0306
L43, 88, 89	74LS374	376-0286
L45, 64	74LS175	376-0160
L46	74S03	376-0556
L57, 59	74LS00	376-0207
L114	74LS02	376-0208
L49	74S138	376-0298
L50, 70, 90, 91, 108	74LS158	376-0293
L46, 51	74S00	376-0228
L52	74S10	376-0238
L53	74S11	376-0237
L54, 83	74125	376-0324
L69	74S139	376-0333
L63	74LS173	376-0289
L103	74LS174	376-0159
L67, 75, 101	74LS04	376-0180
L71	74S32	376-0205
L110	74S04	376-0197
L77	74LS10	376-0209
L78, 82, 99, 100, 104, 109, 116, 117, 118	SPARE	
L84	74S151	376-0336
L85	74S280	376-0246

I.C. LOCATION	TYPE	W.L. PART NO.
L86	74LS245	376-0285
L87	74LS299	376-0303
L92	74S161	376-0278
L96	74LS51	376-0213
L103	74LS373	376-0310
L1-9, 20-28	16 PIN SOCKET	376-9002
L41	24 PIN SOCKET	376-9003

COMPONENT	TYPE	W.L. PART NO.
R1-3, 12-14	47Ω 1/4W 5%	330-1048
R4-11	56Ω 1/4W 5%	330-1057
R15, 29	91Ω 1/4W 5%	330-1092
R16-18, 20, 24-28, 33, 40-42, 45-48, 50, 51, 53, 58, 59, 63	2.2K 1/6W 5%	330-3023
R19	33K 1/4W 5%	330-4034
R21, 55	10K 1/4W 5%	330-4011
R22, 61, 64	68Ω 1/6W 5%	330-1069
R23, 39, 44, 49	1K 1/4W 5%	330-3011
R30	390Ω 1/4W 5%	330-2040
R31, 39, 43	100Ω 1/4W 5%	330-2011
R32	270Ω 1/4W 5%	330-2028
R52, 56, 57, 60	33Ω 1/4W 5%	330-1034
R54	150Ω 1/4W 5%	330-2016
R62	4.7K 1/4W 5%	330-3048
C1-9, 20-28	1UF (HF) 50V	300-1931
C10-19, 29, 30, 32-34, 36, 38, 39, 41-75, 77-80, 82-103, 105-114	.047UF 50V	300-1966
C31	100PF 500V	300-1100
C35	.0022UF 500V MICA	300-5012
C37	220PF 500V	300-1220
C40, 118, 119	270PF 500V	300-1270
C81, 104	390PF 500V	300-1390
C115, 116, 120	15UF 20V (T)	300-4022
C117	.1UF 35V (T)	300-4002
D1	1N4372A	380-2129
J1	5 PIN HDR.	654-1197
J2	2 PIN HDR.	350-0203
Q1	2N3640	375-1003
PS	SHUNT	350-4506
Y1	31.9488 MHZ	321-1002

MNEMONICS	COORD.
BNC - DATA	2E10
BPA0 - BPA15	1G11
BUSAK	1A11
DDTAG	1A11
DIAG.	2F11
DMT	4B11
DSL	1C1
DSLX	1A11
ECAS	3B11
INTA	4E11
IPL	3E11
MA0 - MA8	1F1
MBSY	3G1
MCAADRS	1A11
MP	3E1
MPE	3E11
MDRY	3A8
MREQ	4E11
MRFSH	1A11
M0 - M7	1F1
M1	3G8
M1C	3G1
M1D	3G1
NMI	4A5
PMREQ	3G7
POR	2G9
PT0 - PT3	3F11
RASEL	3A9
RD/WR	3A8
RESET	4D11
RFSH	4E11
RST	3A7
SCAADRS	1A11
SMWR	3E1
SA10 - SA15	1C11
TNC + DATA	2E10
WAIT	3G4
WR	3C11
ZRD	3C11
SXTX	3B11
$62	3E1
$62	3E1
$250	3C1
$250	3C1
$600	3C1
$500	3C1

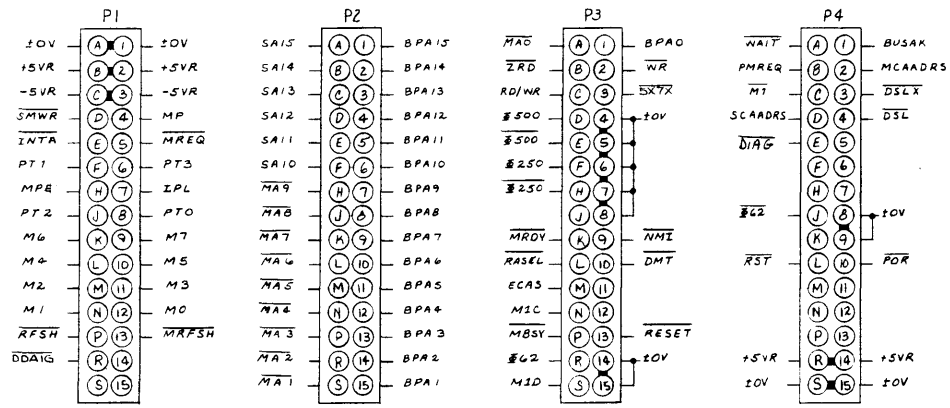

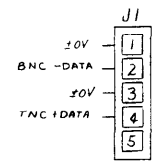

TYPE	I.C. LOC.	SPARES
74S00	L46	2
74S02	L12	1
	L47	1
	L113	2
74S03	L48	1
74LS04	L67	3
	L101	1
74S08	L29	2
74LS08	L65	1
74LS51	L96	1
74125	L54	1
	LB3	2

210 = 209 + 377 OR 378				
210	209	L1-9	L20-28	L41
7962A	7962	377-0466	377-0466	378-5137
7962-1A	7962-1		377-0466	

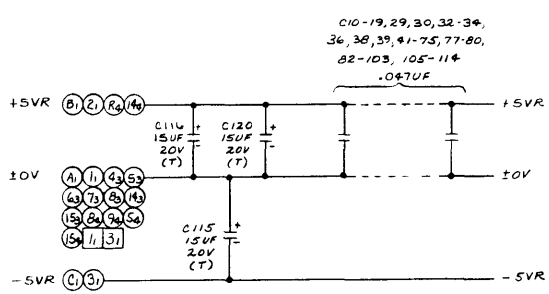

NOTE: ALL RESISTORS 1/6W 5% UNLESS OTHERWISE SPECIFIED.

7962 E-REV	7962-1 E-REV
1	0

REVISION	BY	DATE	APPROVED BY	DATE
INITIAL RELEASE	FGS	4-14-82	JEP 10-8-82	
REVISED PER ECO #22498	JEP	11-19-82	ECS 2-8-82	ENT 12-30-82
REVISED PER ECO #22594				FSS 2-3-83
REVISED PER ECO #23228				
REVISED PER ECO #23537				
REVISED PER ECO #23594				
REVISED PER ECO #23945				

WANG — WANG LABORATORIES, INC. LOWELL, MASS.	BY	DATE	APPROVED BY / DATE
	DWN PG Dunnel	1/25/82	E ENGR K. Gulefin 2-4-82
	CHK D. J. CARDIN	2-4-82	M ENGR
			MFG ENGR
MATERIAL	MODEL NO TCB-3		TITLE DAUGHTER BOARD
	SEE ENGR SPECIFICATIONS No.		
FINISH	TOL EX AS NOTED .XX ± PRAC ± .XXX ± ANG ± FINISH		SEE CHART / D / 7962 / 7
	SCALE	SHT 6 OF 6	WANG PART NUMBER / SIZE / DRAWING NUMBER / REV

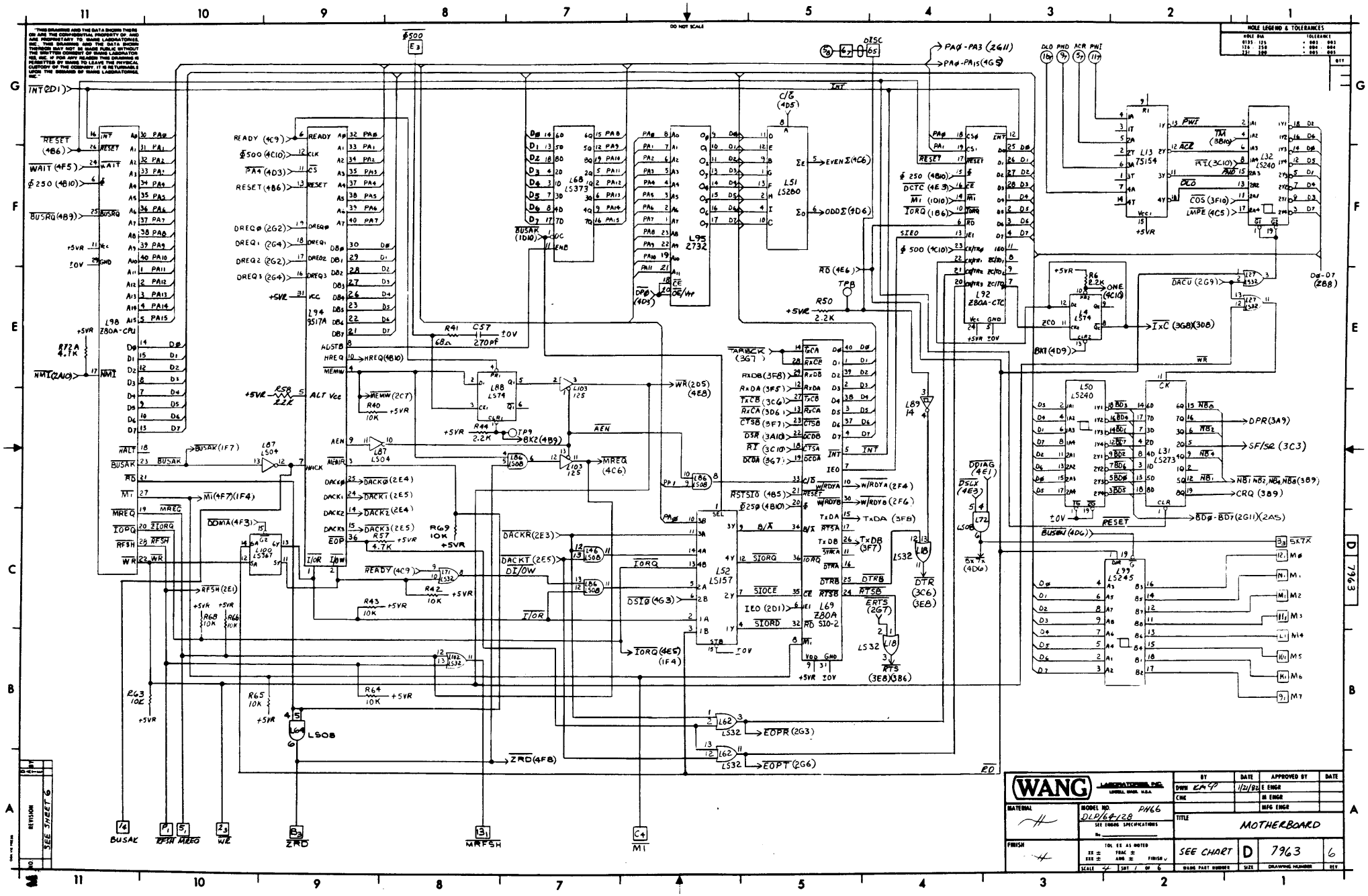
WANG LABORATORIES, INC.
MOTHERBOARD
SEE CHART
D
7963
6
L98 Z80A-CPU
L94 9517A
L68 LS373
L95 Z732
L51 LS280
L92 Z80A-CTC
L13 75154
L32 LS240
L74 LS74
L87 LS04
L86 LS08
L103 125
L171 LS32
L100 LS367
L52 LS157
L69 Z80A SIO-2
L50 LS240
L31 LS273
L99 LS245
L72 LS08
L64 LS08
L62 LS32
L61 LS32
L89 14
L8 LS32
L127 LS32
L4 LS74
R1
R6 2.2K
R41 68Ω
C57 270pF
R40 10K
R44 2.2K
R50 2.2K
R42 10K
R43 10K
R57 4.7K
R69 10K
R68 10K
R66 10K
R63 10Ω
R65 10K
R64 10K
R59 2.2K
872A 4.7K
TP9
TP8
DO NOT SCALE
DISC
PA0-PA3 (2G11)
PA0-PA15 (4G5)
D0-D7 (2B8)
INT (2D1)
RESET (4B6)
WAIT (4F5)
φ 250 (4B10)
BUSRQ (4B9)
NMI (2A10)
READY (4C9)
φ500 (4C10)
PA4 (4D3)
DREQ0 (2G2)
DREQ1 (2G4)
DREQ2 (2G2)
DREQ3 (2G4)
HREQ (4B10)
MEMW (2C7)
BUSAK (1F7)
M1 (4F7)(1F4)
DDWA (4F3)
RFSH (2E1)
DACK0 (2E4)
DACK1 (2E5)
DACK2 (2E4)
DACK3 (2E5)
EOP
DACKR (2E3)
DACKT (2E5)
DI/OW
IORQ (4E5) (1F4)
DSIO (4G3)
IEO (2D1)
EOPR (2G3)
EOPT (2G6)
ZRD (4F8)
WR (2D5) (4E8)
MREQ (4C6)
AEN
IOR
RD
EVEN Σ (4C6)
ODD Σ (4D6)
C/T (4D5)
TPB
AD (4E6)
SIEO
φ 500 (4C10)
φ 250 (4B10)
DCTC (4E3)
M1 (1D10)
IORQ (1B6)
RXDB (3F8)
RXDA (3F5)
TXCB (3C6)
RXCA (3D6)
CTSB (3F7)
DSR (3A10)
RI (3C10)
DCDA (3G7)
W/RDYA (2F4)
W/RDYB (2F6)
TXDA (3F8)
TXDB (3F7)
DTR (3C6) (3E8)
RTS (3E8)(3B6)
ERTS (2G7)
DDIAG (4E1)
DSLK (4E3)
DPR (3A9)
SF/SR (3C3)
NB1, NB2, NB4, NB8 (3B9)
CRQ (3B9)
BD0-BD7 (2G11)(2A5)
BUSW (4D6)
ONE (4C10)
IXC (3G8)(3D8)
COS (3F10)
LMPE (4C5)
PWT
TXA (3B10)
ACR
DLO
DTR (3B10)
PWD
DCD
ACR
PWT
DTR
RTS
SX7X
M0
M1
M2
M3
M4
M5
M6
M7
BUSAK
RFSH MREQ
WR
ZRD
MRFSH
M1
SEE SHEET 6
REVISION
HOLE LEGEND & TOLERANCES
MATERIAL
FINISH
MODEL NO. 2DLP/64-128
SEE TIMING SPECIFICATIONS
TOL EX AS NOTED
SCALE
SHT 1 OF 6
DWN
CHK
E ENGR
M ENGR
MFG ENGR
DATE
APPROVED BY
WANG PART NUMBER
SIZE
DRAWING NUMBER
REV

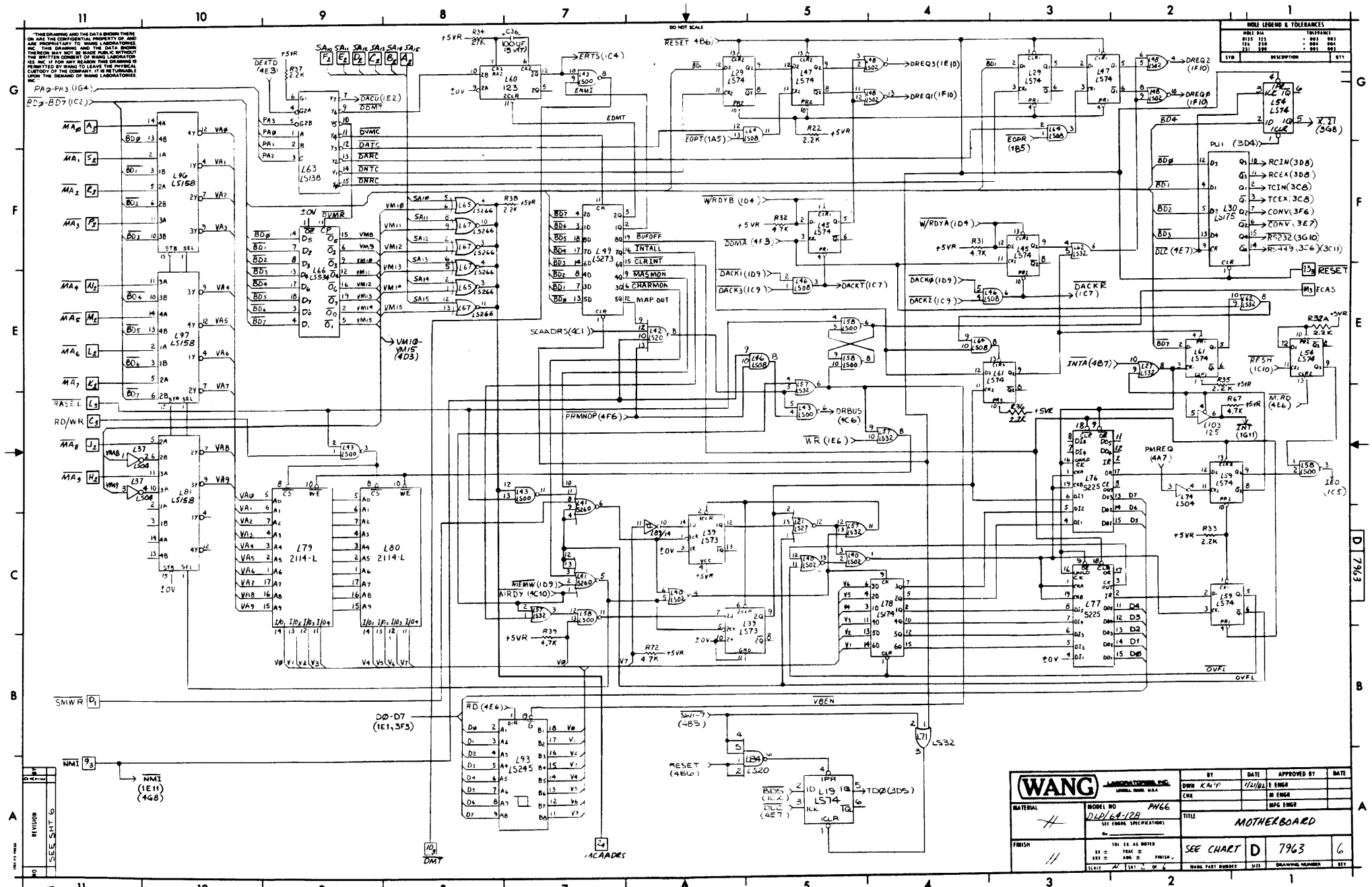
WANG LABORATORIES, INC.
MOTHERBOARD
MODEL NO PH66
DLD/64-128
SEE CHART
D
7963
6
REVISION
SEE SHT 6
DO NOT SCALE
HOLE LEGEND & TOLERANCES
L79 2114-L
L80 2114-L
L93 LS245
L96 LS158
L97 LS158
L81 LS158
L66 LS534
L63 LS138
L49 LS273
L30 LS175
L78 LS74
L76 S225
L77 S225
PU1 (3D4)
RCIN(3D8)
RCEX(3D8)
TCIN(3C8)
TCEX(3C8)
CONV(3F6)
CONV(3E7)
RS232(3G10)
RS449(3C6)(3C11)
RESET
FCAS
DREQ3(1E10)
DREQ1(1F10)
DREQ2 (1F10)
DREQB (1F10)
DRBUS (4C6)
DACKR (1C7)
DACKT(1C7)
TD0(3D5)
IEO (1C5)
OVFL
VBEN
NMI (1E11) (4G8)
D0-D7 (1E1,3F3)
MAPOUT
INTALL
CLRINT
MASMON
CHARMON
BUFOFF
ENMI
EDMT
DMT
ACAADRS

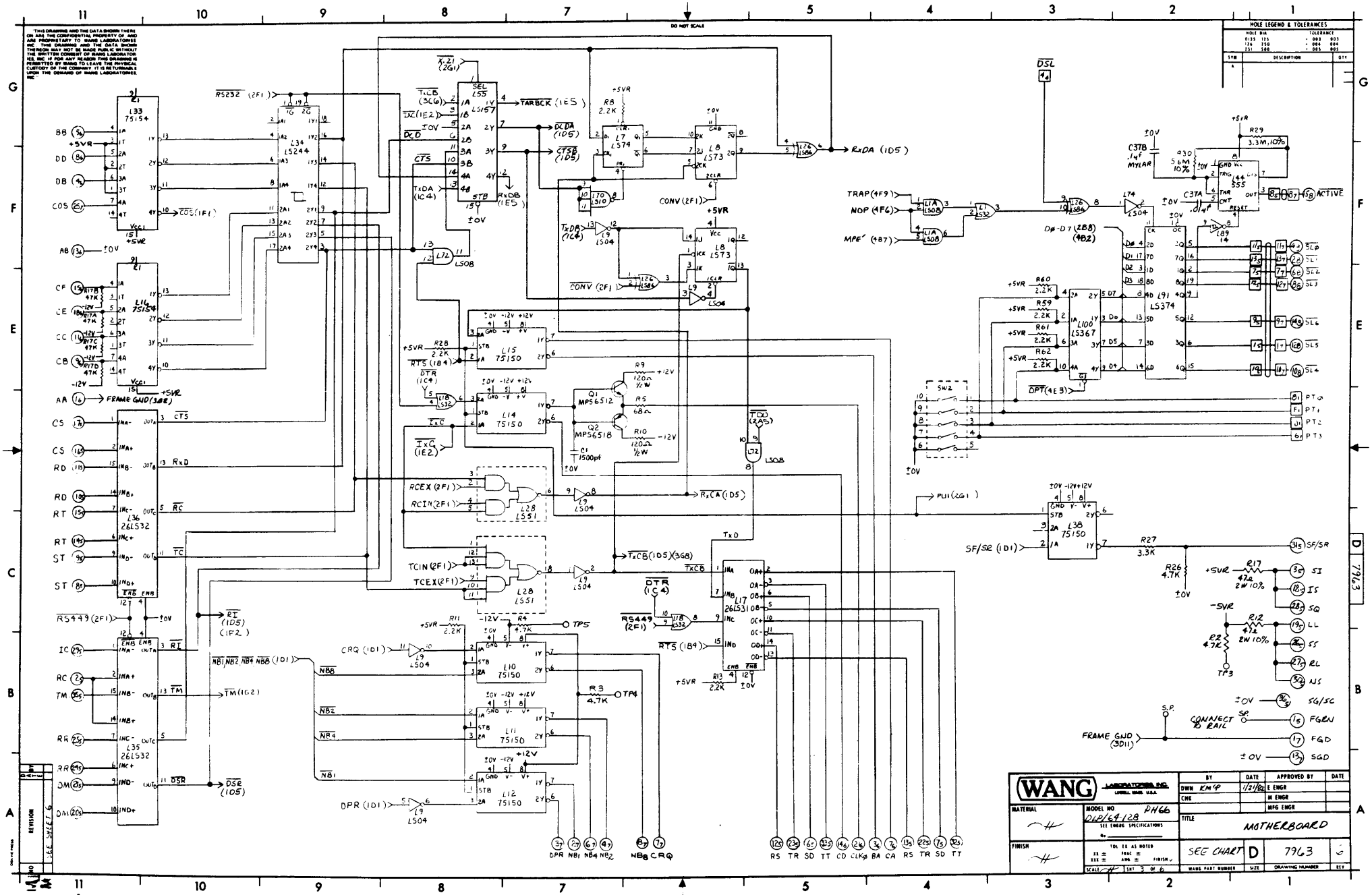
WANG LABORATORIES, INC.
MOTHERBOARD
SEE CHART
D
7963
DO NOT SCALE
HOLE LEGEND & TOLERANCES
L33 75154
L34 LS244
L36 26LS32
L35 26LS32
L15 75150
L14 75150
L28 LS51
L10 75150
L11 75150
L12 75150
L38 75150
L17 26LS31
L91 LS374
L100 LS367
L8 LS73
L7 LS74
L72 LS08
L9 LS04
L74 LS04
L89 14
L26 LS04
L1A LS08
L1 LS32
L18 LS32
L70 LS10
C37B .1µf MYLAR
C37A .01µf
R29 3.3M 10%
R30 5.6M 10%
555
ACTIVE
RESET
TRAP (4F9)
NOP (4F6)
MPE' (4B7)
D0-D7 (2B8) (4B2)
SL0 SL1 SL2 SL3 SL4 SL5 SL6 SL7
PT0 PT1 PT2 PT3
DPT (4E3)
SW2
PU1 (2G1)
SF/SR (1D1)
R27 3.3K
R26 4.7K
R17 472 2W 10%
R12 472 2W 10%
R2 4.7K
TP3
SI IS SQ LL SS RL NS
SG/SC
FGRN
FGD
SGD
CONNECT TO RAIL
FRAME GND (3D11)
RS232 (2F1)
X.21 (2G1)
TARBCK (1E5)
DCDA (1D5)
CTSB (1D5)
RxDB (1E5)
RxDA (1D5)
CONV (2F1)
TxDA (1C4)
TxCB (3C6)
TxC (1E2)
DCD
CTS
RTS (1B4)
DTR (1C4)
RxC (1E2)
RCEX (2F1)
RCIN (2F1)
TCIN (2F1)
TCEX (2F1)
RxCA (1D5)
TxCB (1D5)(3G8)
TCD (2A5)
RS449 (2F1)
RI (1D5) (1F2)
TM (1G2)
DSR (1D5)
CRQ (1D1)
NB1 NB2 NB4 NB8 (1D1)
DPR (1D1)
TP5
TP4
DSL
ACTIVE
RS TR SD TT CD CLKφ BA CA RS TR SD TT
DPR NB1 NB4 NB2 NB8 CRQ
REVISION
SHEET 6
DWN KMG 1/21/82
CHK
MATERIAL
MODEL NO DH66 DLP/64/128
FINISH
SCALE
SHT 3 OF 6
WANG PART NUMBER
SIZE
DRAWING NUMBER
REV

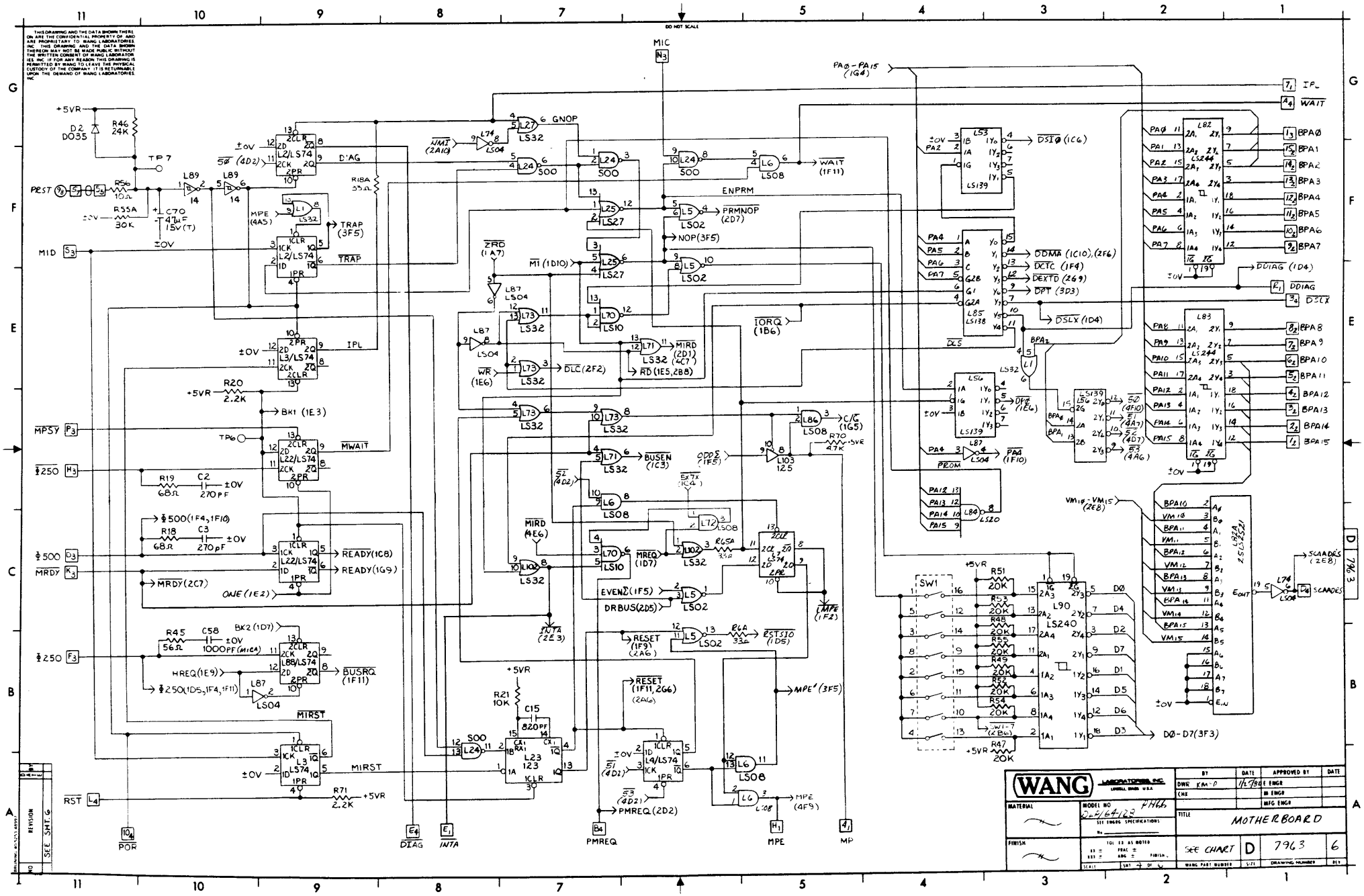
WANG LABORATORIES, INC.
MOTHERBOARD
SEE CHART
D
7963
6
DO NOT SCALE
MIC
PA0-PA15 (1G4)
IPL
WAIT
BPA0
BPA1
BPA2
BPA3
BPA4
BPA5
BPA6
BPA7
BPA8
BPA9
BPA10
BPA11
BPA12
BPA13
BPA14
BPA15
DDIAG (1D4)
DDIAG
DSCX
DSI0 (1C6)
DDMA (1C10),(2F6)
DCTC (1F4)
DEXTD (2G9)
DPT (3D3)
DSLX (1D4)
DLS
PRM
PAA (1F10)
VM10-VM15 (2E8)
SCAADES (2E8)
D0-D7(3F3)
D0
D4
D2
D7
D1
D5
D6
D3
+5VR
R51 20K
R53 20K
R48 20K
R55 20K
R49 20K
R52 20K
R54 20K
R47 20K
SW1
L90 LS240
L82 LS244
L83 LS244
L84 LS521
L74 LS04
L86 LS08
L103 125
L102 LS32
L72 LS08
L70 LS10
L71 LS32
L73 LS32
L6 LS08
L5 LS02
L24 S00
L27 LS32
L25 LS27
L1 LS32
L2/LS74
L3/LS74
L22/LS74
L88/LS74
L4/LS74
L23 123
L87 LS04
L89 14
L53 LS139
L56 LS139
L85 LS138
L80 LS20
R70 4.7K
R21 10K
C15 820PF
R71 2.2K
R20 2.2K
R18 68Ω
C3 270pF
R19 68Ω
C2 270PF
R45 56Ω
C58 1000PF
R35A 30K
C70 47μF 15V(T)
R56 10Ω
R18A 33Ω
D2 D035
R46 24K
TP7
TP6
PRST
RST
POR
DIAG
INTA
PMREQ
MPE
MP
MPE' (3F5)
MPE (4F9)
PMREQ (2D2)
RESET (1F9) (2A6)
RESET (1F11,2G6)
RESET (1F11)
MIRST
MWAIT
TRAP
D'AG
GNOP
ENPRM
PRMNOP (2D7)
NOP(3F5)
MI (1D10)
MIRD (2D1) (4C7)
RD (1E5,2B8)
DLC(2F2)
WR (1E6)
IORQ (1B6)
BUSEN (1C3)
C/G (1G5)
ODD2 (1F5)
MREQ (1D7)
EVEN2 (1F5)
DRBUS(2D5)
BUSRQ (1F11)
HREQ(1E9)
BK1 (1E3)
BK2 (1D7)
MPSY
MRDY
MRDY(2C7)
OWE(1E2)
READY(1C8)
READY(1G9)
500(1F4,1F10)
250(1D5,1F4,1F11)
250(1F4,1F11)
MPE (4A5)
MI1D
MI1A (2E3)
MPE (1F2)
RESET (1F9) (2A6)
RESET (1F11,2G6)
RESET (1F11,2G6)
RESET (1F11,2G

THIS DRAWING AND THE DATA SHOWN THEREON ARE THE CONFIDENTIAL PROPERTY OF AND ARE PROPRIETARY TO WANG LABORATORIES INC. THIS DRAWING AND THE DATA SHOWN THEREON MAY NOT BE MADE PUBLIC WITHOUT THE WRITTEN CONSENT OF WANG LABORATORIES INC. IF FOR ANY REASON THIS DRAWING IS PERMITTED BY WANG TO LEAVE THE PHYSICAL CUSTODY OF THE COMPANY IT IS RETURNABLE UPON THE DEMAND OF WANG LABORATORIES INC.

DO NOT SCALE

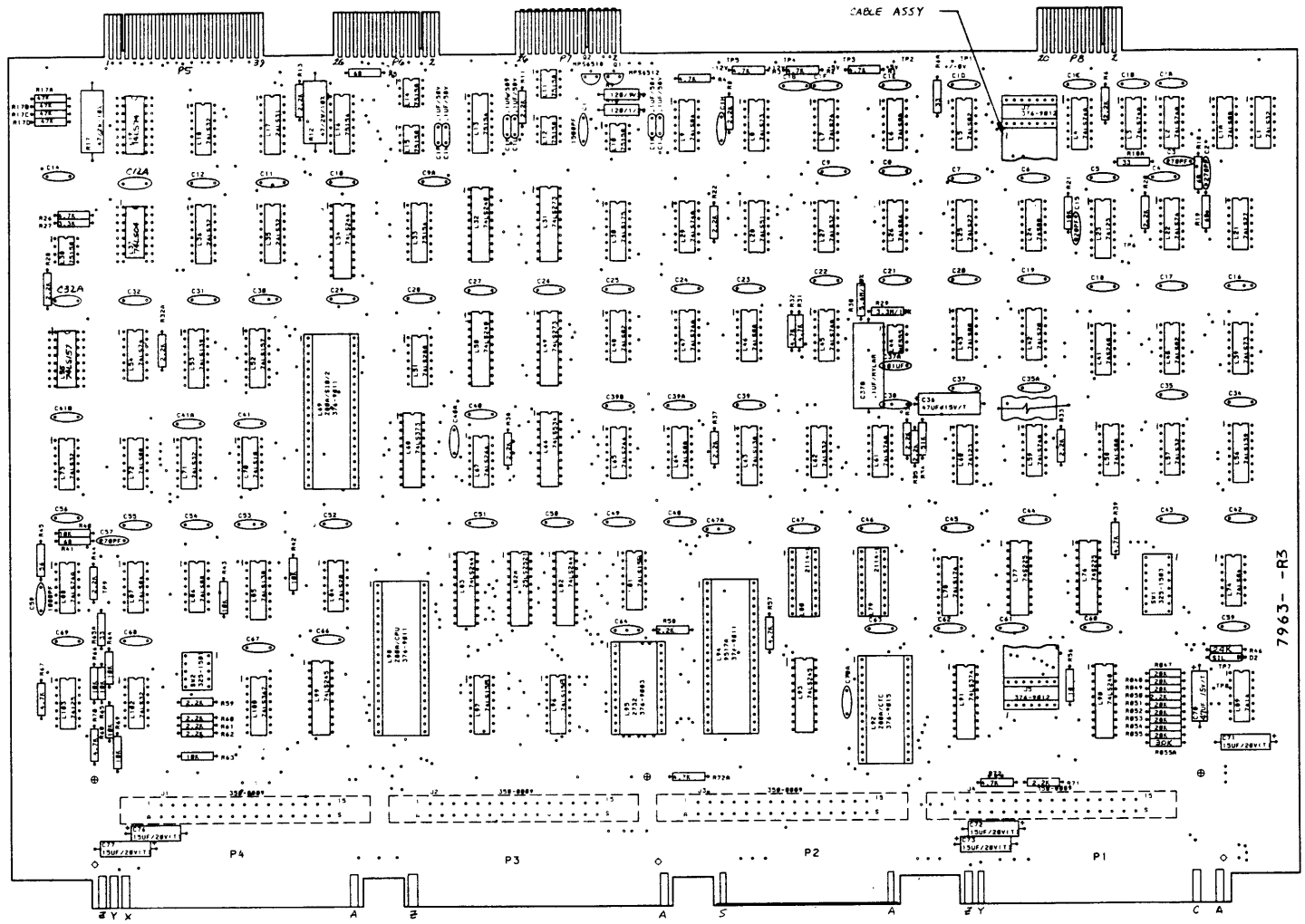

REV	REVISION	BY	DATE
	SEE SHT 6		

WANG LABORATORIES, INC. LOWELL, MASS. U.S.A.	BY	DATE	APPROVED BY	DATE
	DWN KM'P.	1/21/80	E ENGR	
	CHK		M ENGR	
			MFG ENGR	
MATERIAL	MODEL NO PH66 DLP/64-128 SEE ENGRG SPECIFICATIONS No.	TITLE	MOTHERBOARD	
FINISH	TOL EX AS NOTED .XX = ±0.01 .XXX = ±0.005 ANG = ±0° FINISH	SEE CHART	D	7963	6
	SCALE	SHT 5 OF 6	WANG PART NUMBER	SIZE	DRAWING NUMBER	REV

THIS DRAWING AND THE DATA SHOWN THERE ON ARE THE CONFIDENTIAL PROPERTY OF AND ARE PROPRIETARY TO WANG LABORATORIES INC. THIS DRAWING AND THE DATA SHOWN THEREON MAY NOT BE MADE PUBLIC WITHOUT THE WRITTEN CONSENT OF WANG LABORATORIES INC. IF FOR ANY REASON THIS DRAWING IS PERMITTED BY WANG TO LEAVE THE PHYSICAL CUSTODY OF THE COMPANY IT IS RETURNABLE UPON THE DEMAND OF WANG LABORATORIES INC.

IC LOCATION	TYPE	W.L. PART NO.
L1,8 27,57,62 71,73,102	74LS32	376-0211
L1A,6 46,64,72,86	74LS08	376-0153
L2 3 47,22 29 45 47,54, 59 61 85,119	74LS74A	376-0155
L5 40 43	74LS02	376-0208
L8 39	74LS73	376-0304
L9,37 74,87	74LS04	376-0180
L10,11,12 14 15,38	75150	376-0076
L13,16,33	75154	376-0077
L17	26LS31	376-0470
L21,25	74LS27	376-0245
L23 60	74123	376-0080
L24	74S00	376-0228
L26	74LS86	376-0231
L28	74LS51	376-0213
L30	74LS175	376-0160
L31,49	74LS273	376-0302
L32,50,90	74LS240	376-0297
L34,82,83	74LS244	376-0288
L35 36	26LS32	376-0471
L41	74S260	376-0206
L42,64	74S20	376-0210
L43,58	74LS00	376-0207
L44	NE555	376-0126
L51	74LS280	376-0242
L52,55	74LS157	376-0216
L53 56	74LS139	376-0226
L63,85	74LS138	376-0294
L65,67	74LS266	376-0148
L66	74LS534	376-0544
L68	74LS373	376-0310
L69	Z80A-SIO/2	SEE CHART
L70	74LS10	376-0209
L76 77	74S225	376-0323
L78	74LS174	376-0159
L79,80	2114L	SEE CHART
L81,96 97	74LS158	376-0293
L83	7414	376-0139
L91	74LS374	376-0286
L92	Z80A/CTC	SEE CHART
L93,99	74LS245	376-0285
L94	AM9517A	SEE CHART
L95	2732	SEE CHART
L98	Z80A/CPU	SEE CHART
L100	74LS367	376-0192
L103	74125	376-0324
L82A	25LS2521	376-0317
L69,94,98	40 PIN SOCKET	376-9011
L79,80	18 PIN SOCKET	376-9014
L92	28 PIN SOCKET	376-9015
L95	24 PIN SOCKET	376-9003

210 = 209 + 377 OR 378

210	209	L69	L79,80	L92	L94	L95	L98
7963-A	7963	377-C393	377-0341-C	377-0371	377-0388	376-4038	377-0368

COMPONENT	TYPE	W.L. PART NO.
R1-4,26,31,32,39, 57,67,70,72,72A,	4.7K ¼W 5%	330-3048
R5,18,19,41	68Ω ¼W 5%	330-1069
R6,8,11,13,20,22,28, 33,35-38,44,50,52,62, 72A,71	2.2K ¼W 5%	330-3023
R6A,18A,65A	33Ω ¼W 5%	330-1034
R9,10	120Ω ½W 5%	331-2013
R12,17	47Ω 2W 10%	337-1047
R17A,17B,17C,17D	47K ¼W 5%	330-4048
R55A	30K ¼W 5%	330-4031
R21,40,42,43,63-66, 68,69	10K ¼W 5%	330-4011
R27	3.3K ¼W 5%	331-3034
R29	3.3M ¼W 10%	330-6033
R30	5.6M ¼W 10%	330-6056
R34	27K ¼W 5%	330-4028
R45	56Ω ¼W 5%	330-1057
R46	24K ¼W 5%	330-4025
R47-49,51-55	20K ¼W 5%	330-4021
R56	10Ω ¼W 5%	330-1011
C70	47UF 15V (T)	300-4020
C1	1500pF 200V	300-1964
C1A-C1H, 4-12, 12A, 9A, 14, 32A 16-32, 34, 35, 35A, 39A, 37-56, 39B, 40A, 41A, 41B, 59-64, 66-69, 70A, 70A	.047uf 50V	300-1966
C1I, 1K, 1L, 1M, 1N, 1P	.1uf. 50V	300-1930
C2,3,57	270pf 500V	300-1270
C15	820pf 500V	300-1820
C36	1UF 15V (T)	300-4021
C37A	.01uf 25V	300-1903
C37B	.1uf 100V (M)	300-2210
C5B	1000pf 100V(MICA)	300-5006
C71-73,76,77	15uf 20V (T)	300-4022
D1	SIL D035	380-1001
Q1	MPS6512	375-1012
Q2	MPS6518	375-1014
CABLE ASSY	14 COND. FLAT	220-3170
SW1	SPST, 8POS.	325-1503
SW2	SPST, 5POS.	325-1501
J1,2,3,4	30PIN CONN	350-0009
J5,7	14PIN SOCKET	376-9012

IC LOCATION	TYPE	SPARES
74LS02	L40	1
74LS32	L32	1
74LS04	L37	4
	L74	2
74LS08	L1A	2
7414	L89	1
74LS20	L42	1
74LS27	L21	2
	L25	1
74LS32	L1	1
74LS86	L26	1
74123	L23	1
	L60	1
74LS139	L53	1
74LS174	L79	1
74LS266	L65	2

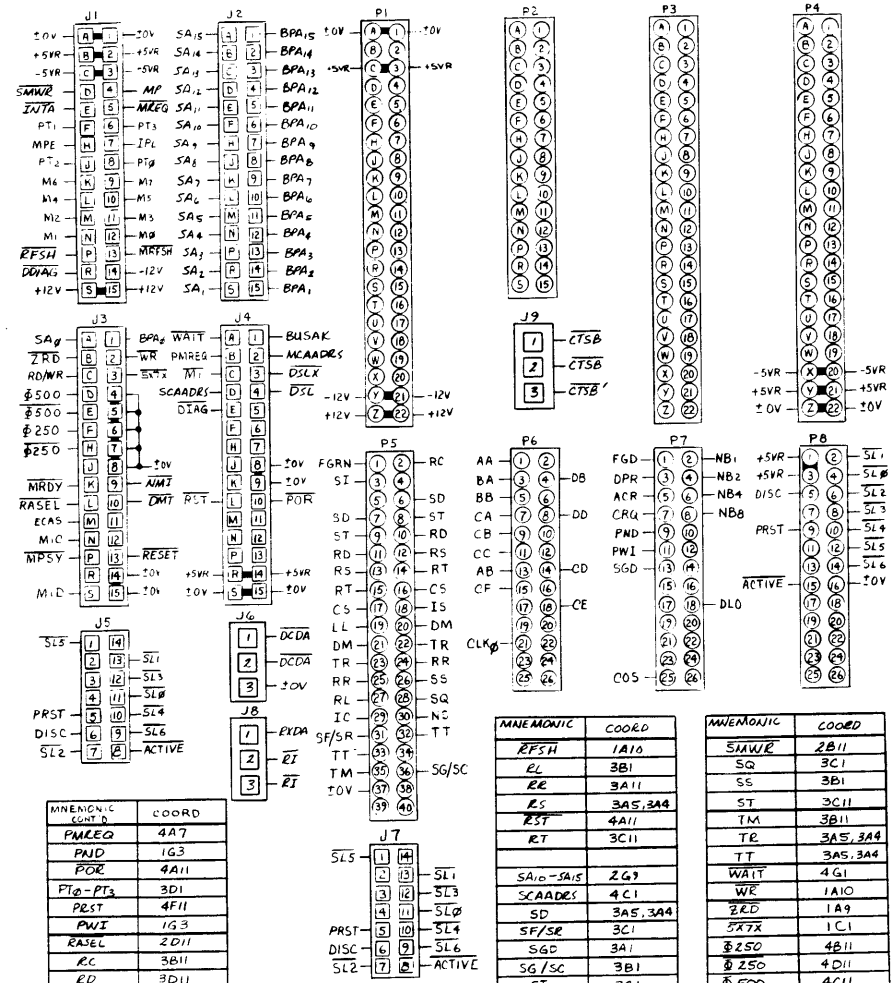

MNEMONIC CONT'D	COORD
PMREQ	4A7
PND	1G3
POR	4A11
PTØ-PT3	3D1
PRST	4F11
PWI	1G3
RASEL	2D11
RC	3B11
RD	3D11
RD/WR	2D11

MNEMONIC	COORD
RFSH	1A10
RL	3B1
RR	3A11
RS	3A5,3A4
RST	4A11
RT	3C11
SA10-SA15	2G9
SCAADRS	4C1
SD	3A5,3A4
SF/SR	3C1
SGD	3A1
SG/SC	3B1
SI	3C1
SLØ-SL6	3E1
RESET	2E1

MNEMONIC	COORD
SMWR	2B11
SQ	3C1
SS	3B1
ST	3C11
TM	3B11
TR	3A5,3A4
TT	3A5,3A4
WAIT	4G1
WR	1A10
ZRD	1A9
5X7X	1C1
Ø250	4B11
Ø250	4D11
Ø500	4C11
Ø500	1G8

MNEMONIC	COORD
AA	3D11
AB	3F11
ACR	1G3
ACTIVE	3F1
BA	3A4
BB	3G11
BPAØ-BPA15	4G1
BUSAK	1A11
CA	3A9
CB	3E11
CC	3E1
CD	3A5
CE	3E11
CF	3E11
CLKØ	3A5
COS	3F11
CRQ	3A6
CS	3D11
DB	3F11
DD	3F11
DDIAG	4E1
DIAG	4A6
DISC	1G4
DLO	1G3
DM	3A11
DMT	2A8
DPR	3A7
DSL	3G3
DSLX	4E1
ECAS	2E1
FGD	3B1
FGRN	3B1
IC	3B11
INTA	4A8
IPL	4G1
IS	3C1
LL	3C1
MAØ-MA9	2G11
MI	1A6
MIC	4G6
MID	4F11
MØ-M7	1C1
MP	4A5
MPE	4A5
MPSY	4D11
MRDY	4C11
MREQ	1A10
MRFSH	1A8
NB1	3A7
NB2	3A7
NB4	3A7
NB8	3A6
NS	3B1
NMI	2A11
MCAADRS	2A7

E-REV 3

NOTE:
1. ALL RES. ARE ¼W 5% UNLESS OTHERWISE SPECIFIED.

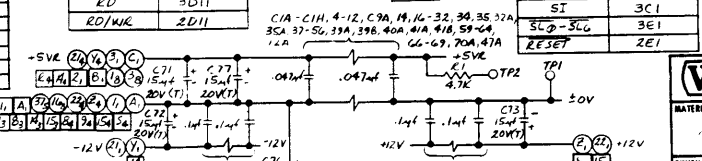

REVISION	BY	DATE	APPROVED BY	DATE
DRAWN/MATED PER DWG E46-4 AND DWG E46-2		7/24/81		6/26/82
REVISED PER ECO #26354 APP'D		11/20/81		11/18/83
REVISED PER ECO #28215 APP'D		6/29/83		11/18/83
REVISED PER ECO #32968 APP'D		11/18/83		

WANG LABORATORIES INC. LOWELL, MASS. U.S.A.

MATERIAL

FINISH

MODEL NO. SLC/64-128 KM/BC

SET TOOL SPECIFICATIONS

TOL EX AS NOTED

SCALE 4 SHT 6 OF 2

WANG PART NUMBER

TITLE MOTHERBOARD

SEE CHART | D | 7963 | 6

DRAWING NUMBER | SIZE | REV

BY	DATE	APPROVED BY	DATE
DWN KMP	11/24/81	E ENGR	
CHK	5/26/82	M ENGR	
		MFG ENGR	